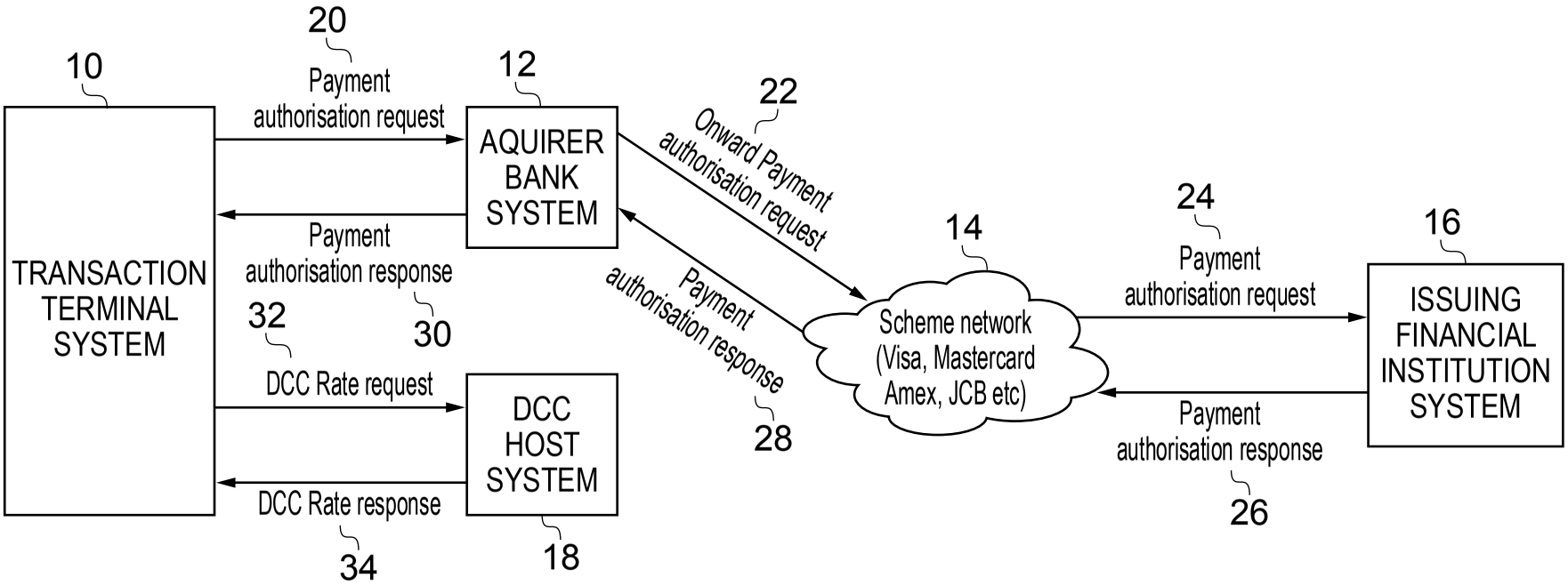
10
TRANSACTION TERMINAL SYSTEM
20
Payment authorisation request
12
AQUIRER BANK SYSTEM
Payment authorisation response
30
32
DCC Rate request
DCC HOST SYSTEM
DCC Rate response
34
18
22
Onward Payment authorisation request
Payment authorisation response
28
14
Scheme network (Visa, Mastercard Amex, JCB etc)
24
Payment authorisation request
16
ISSUING FINANCIAL INSTITUTION SYSTEM
Payment authorisation response
26

100

FIG. 1

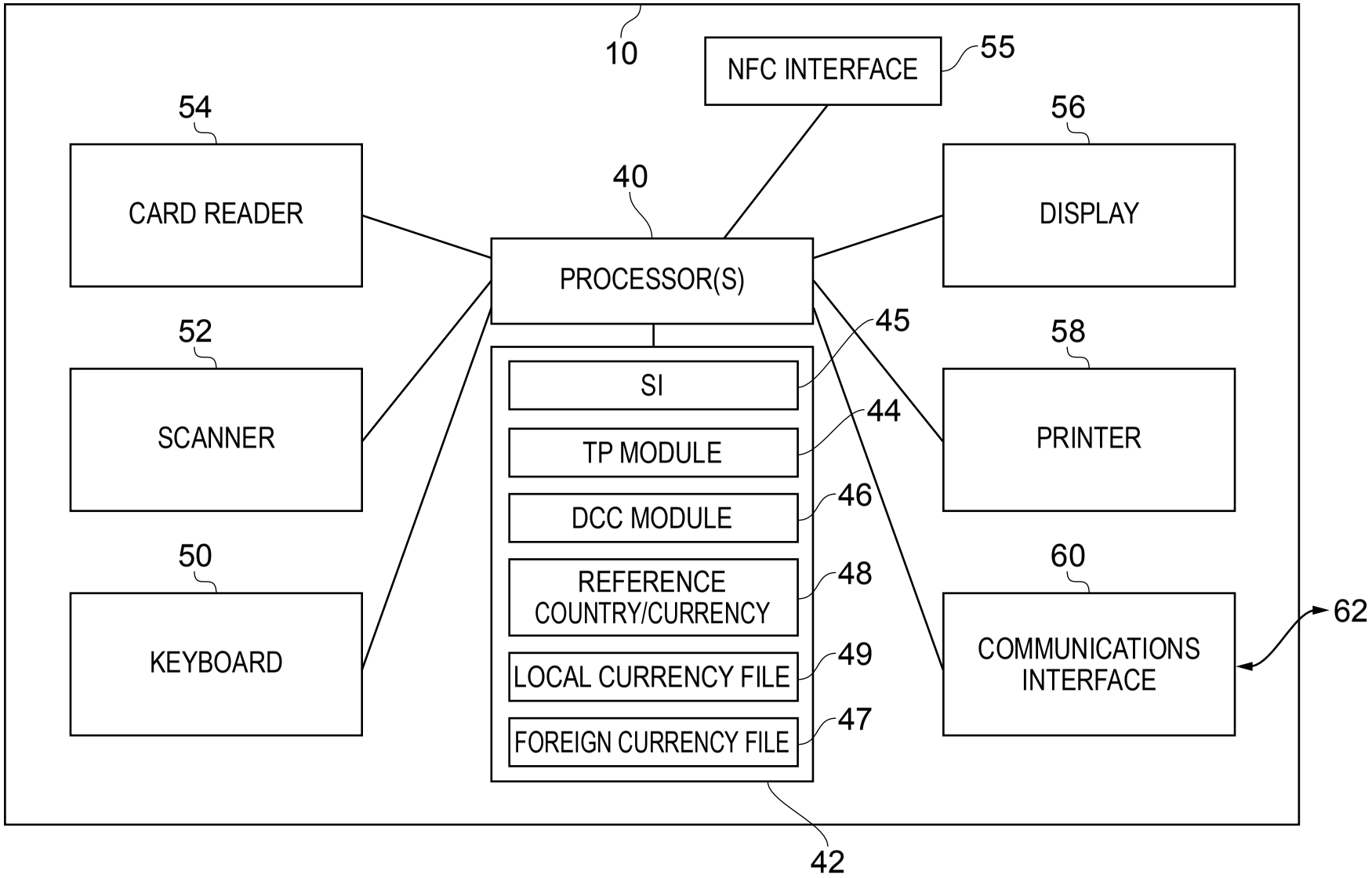
10
NFC INTERFACE
55
54
CARD READER
56
DISPLAY
40
PROCESSOR(S)
52
SCANNER
45
SI
44
TP MODULE
46
DCC MODULE
48
REFERENCE COUNTRY/CURRENCY
49
LOCAL CURRENCY FILE
47
FOREIGN CURRENCY FILE
58
PRINTER
50
KEYBOARD
60
COMMUNICATIONS INTERFACE
62
42

FIG. 2

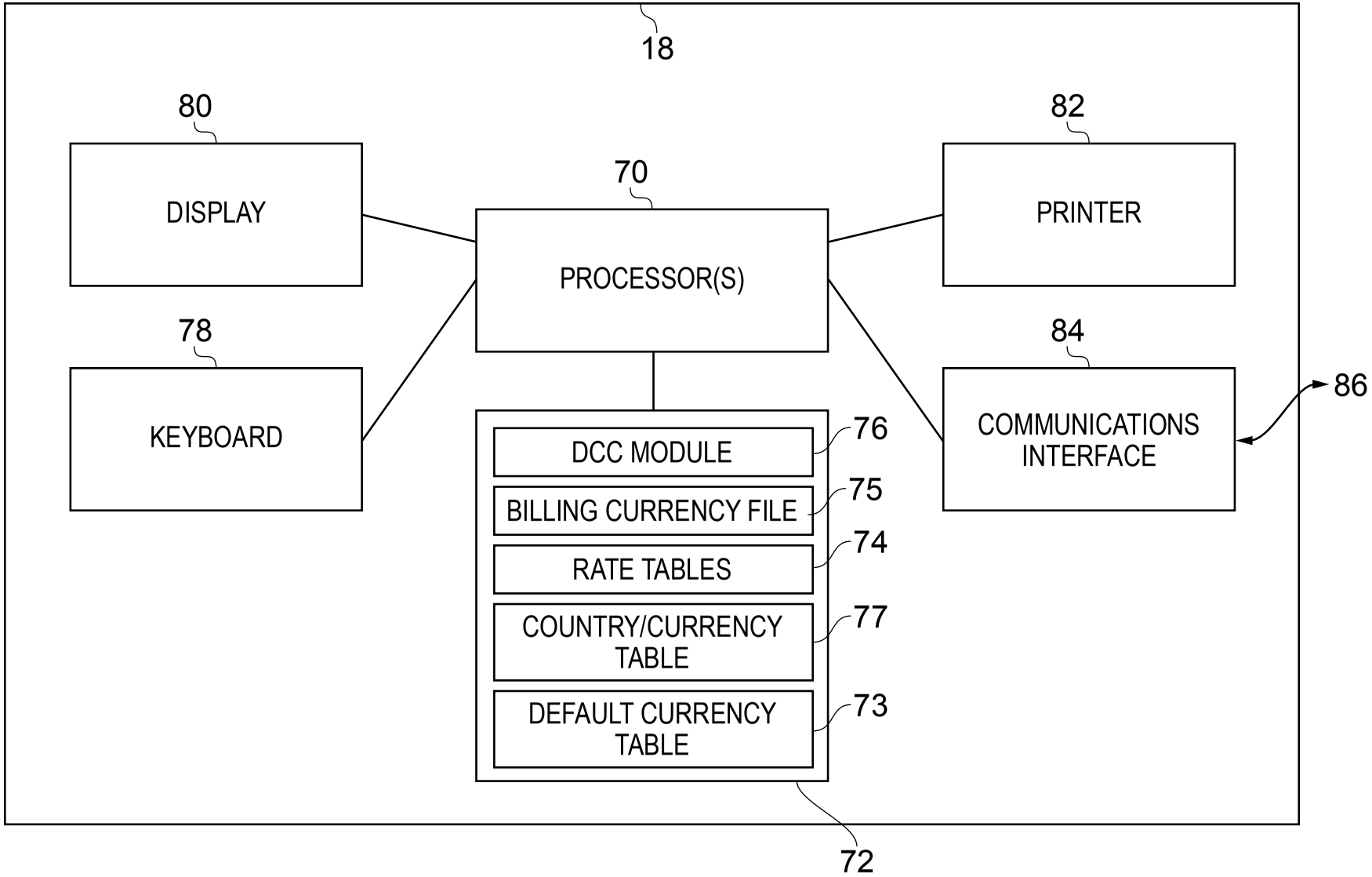
18
80
DISPLAY
78
KEYBOARD
70
PROCESSOR(S)
82
PRINTER
84
COMMUNICATIONS INTERFACE
86
DCC MODULE
76
BILLING CURRENCY FILE
75
RATE TABLES
74
COUNTRY/CURRENCY TABLE
77
DEFAULT CURRENCY TABLE
73
72

FIG. 3

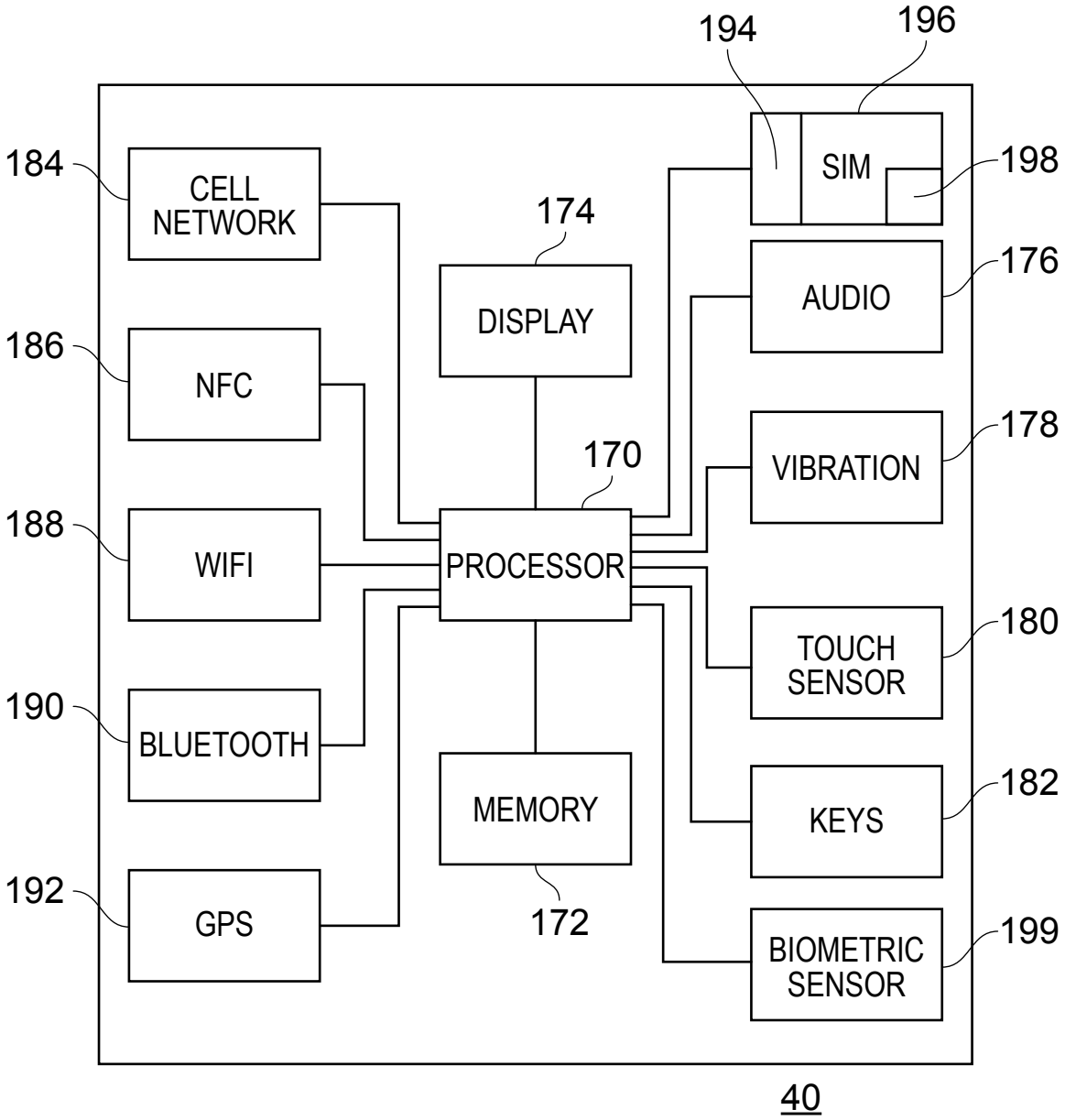
194
196
184
CELL NETWORK
SIM
198
174
DISPLAY
AUDIO
176
186
NFC
178
170
VIBRATION
188
WIFI
PROCESSOR
180
TOUCH SENSOR
190
BLUETOOTH
MEMORY
182
KEYS
192
GPS
172
BIOMETRIC SENSOR
199
40

FIG. 4

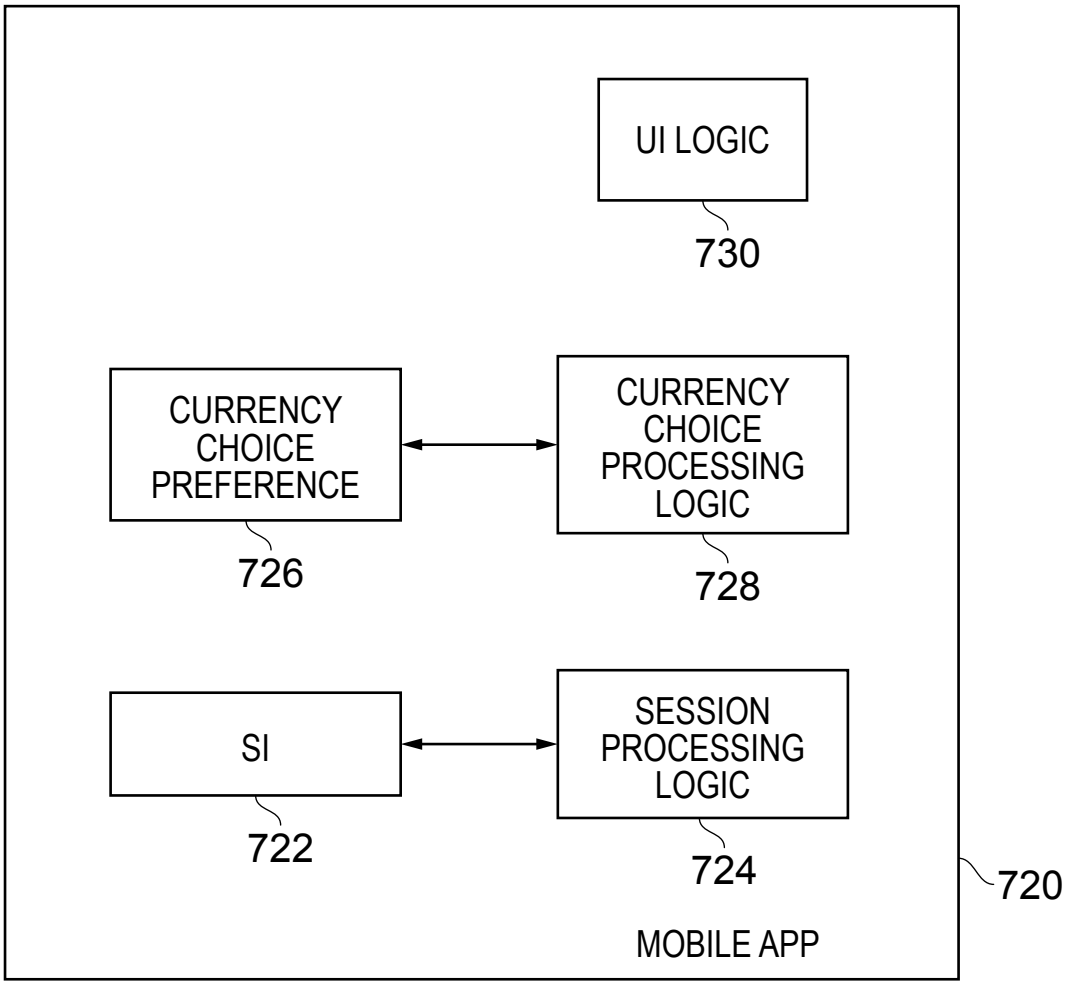
UI LOGIC
730
CURRENCY CHOICE PREFERENCE
726
CURRENCY CHOICE PROCESSING LOGIC
728
SI
722
SESSION PROCESSING LOGIC
724
720
MOBILE APP

FIG. 5

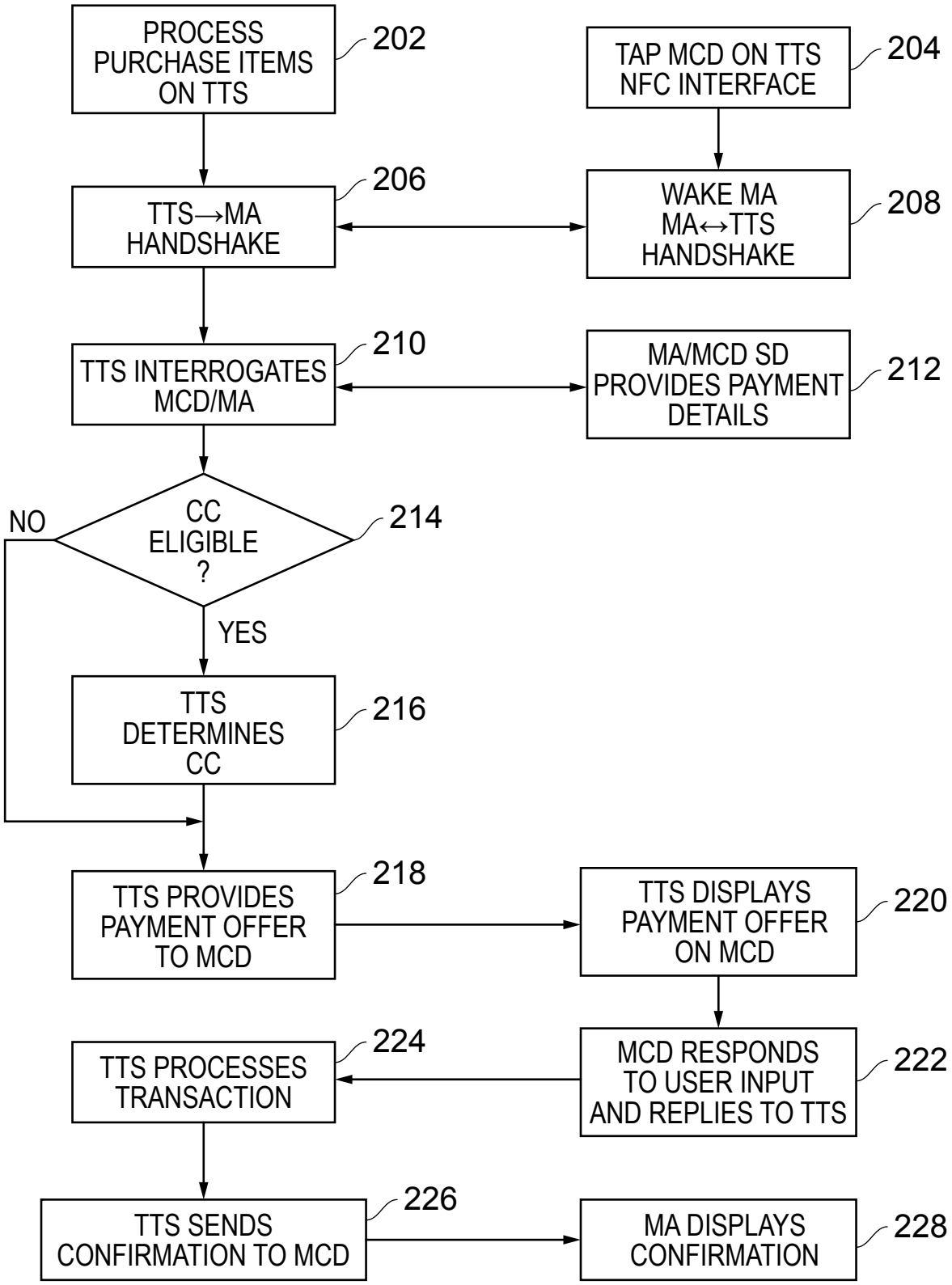
PROCESS PURCHASE ITEMS ON TTS
202
TAP MCD ON TTS NFC INTERFACE
204
TTS→MA HANDSHAKE
206
WAKE MA MA↔TTS HANDSHAKE
208
TTS INTERROGATES MCD/MA
210
MA/MCD SD PROVIDES PAYMENT DETAILS
212
CC ELIGIBLE ?
214
NO
YES
TTS DETERMINES CC
216
TTS PROVIDES PAYMENT OFFER TO MCD
218
TTS DISPLAYS PAYMENT OFFER ON MCD
220
MCD RESPONDS TO USER INPUT AND REPLIES TO TTS
222
TTS PROCESSES TRANSACTION
224
TTS SENDS CONFIRMATION TO MCD
226
MA DISPLAYS CONFIRMATION
228

FIG. 6A

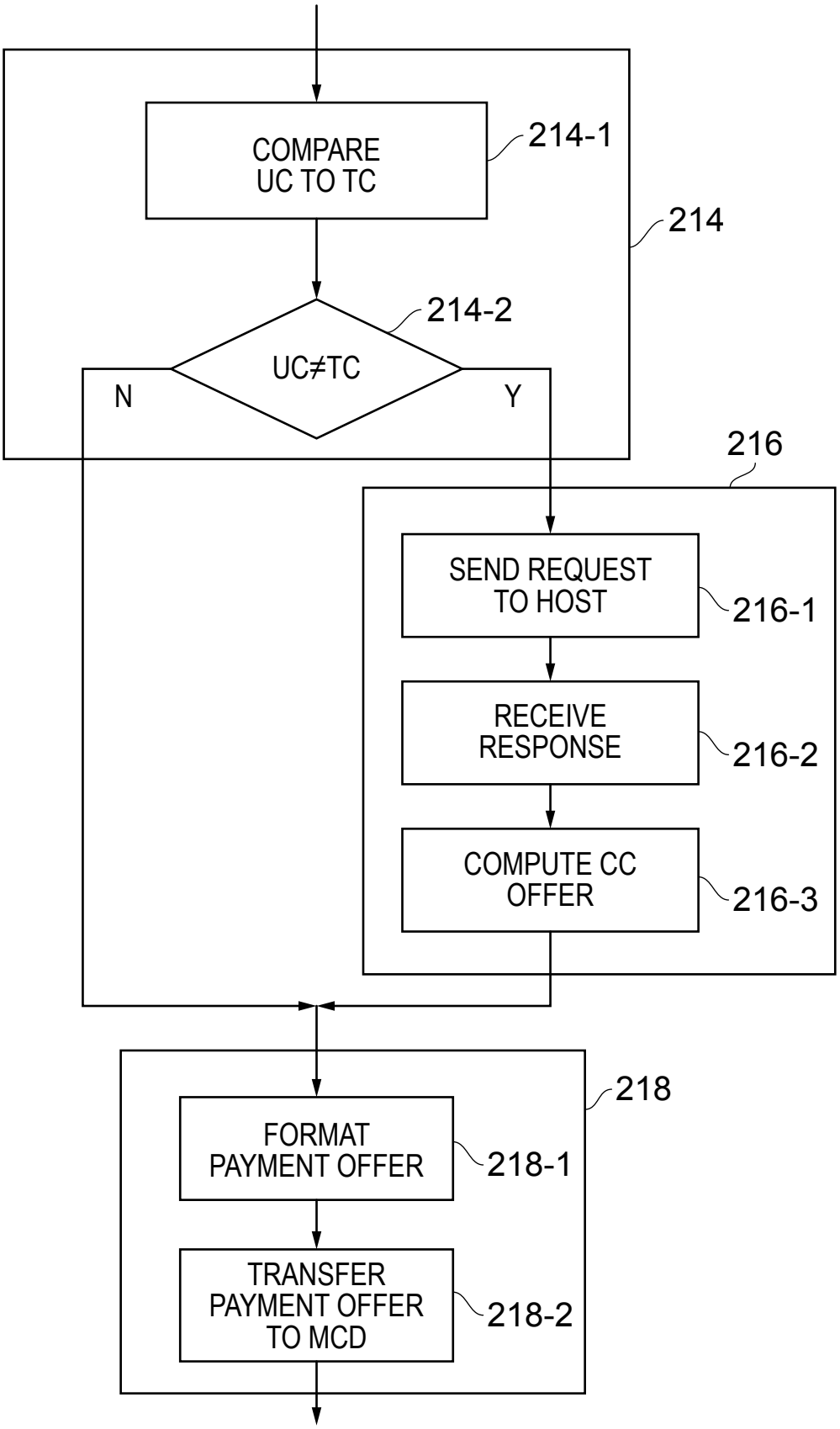
COMPARE
UC TO TC
214-1
214
214-2
UC≠TC
N
Y
216
SEND REQUEST
TO HOST
216-1
RECEIVE
RESPONSE
216-2
COMPUTE CC
OFFER
216-3
218
FORMAT
PAYMENT OFFER
218-1
TRANSFER
PAYMENT OFFER
TO MCD
218-2

FIG. 6B