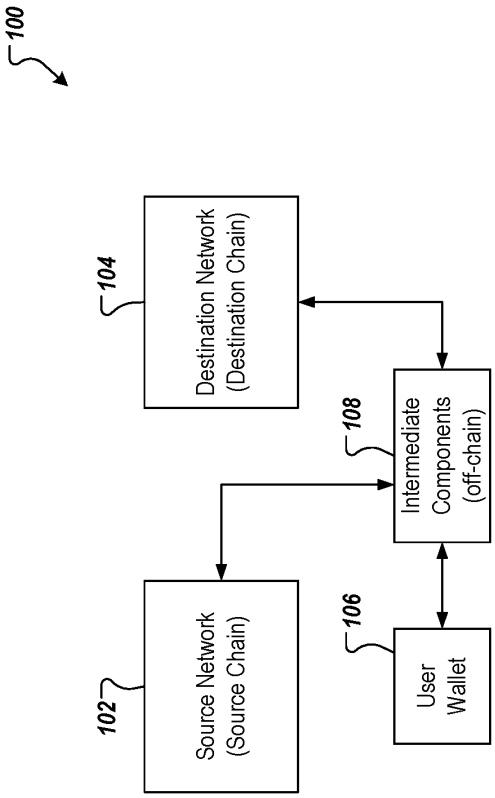
100
104
Destination Network
(Destination Chain)
108
Intermediate
Components
(off-chain)
102
Source Network
(Source Chain)
106
User
Wallet

FIG. 1

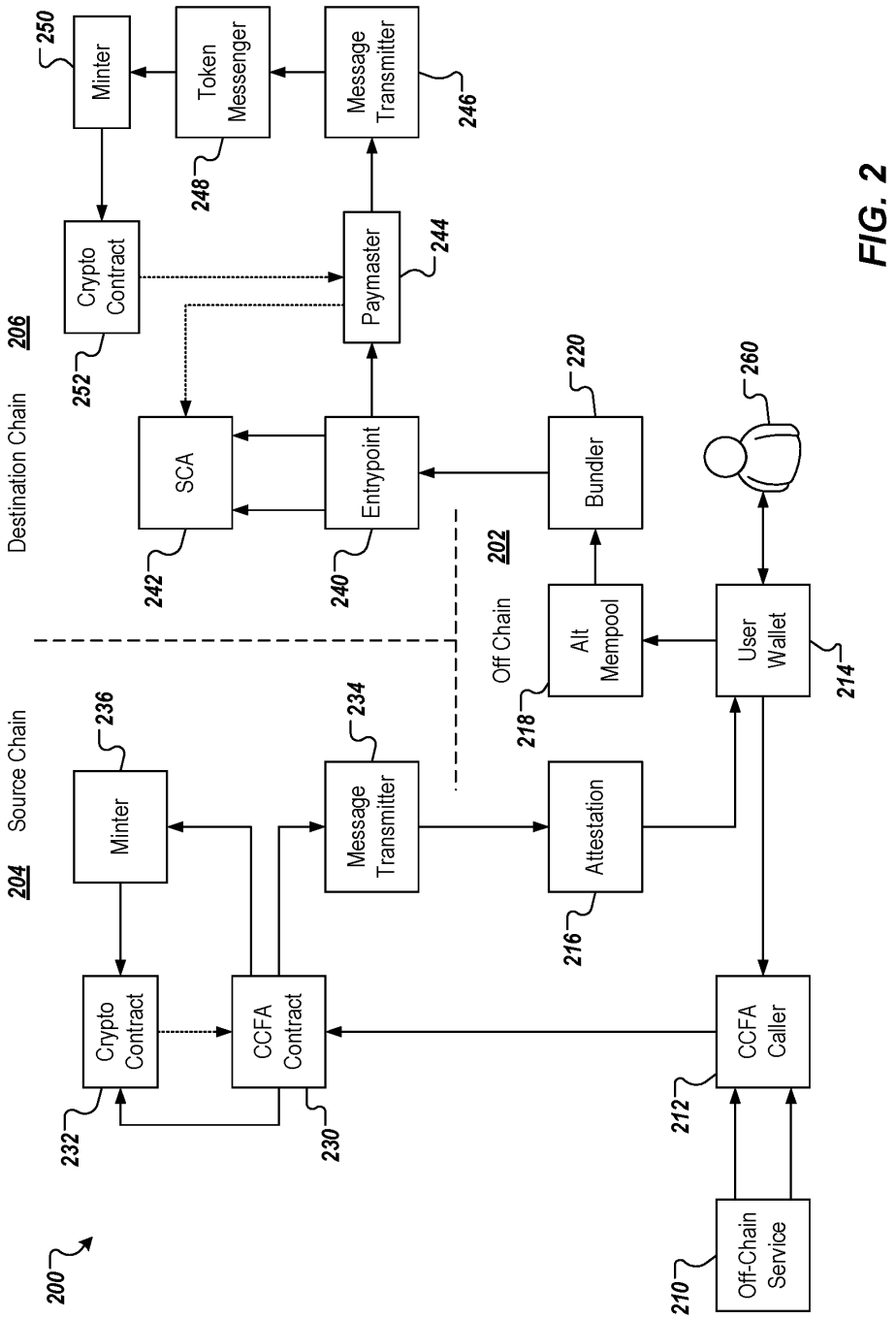
200
Source Chain
204
Destination Chain
206
Off Chain
202
Minter
236
Crypto Contract
232
CCFA Contract
230
Message Transmitter
234
Attestation
216
Alt Mempool
218
Bundler
220
SCA
242
Entrypoint
240
Paymaster
244
Crypto Contract
252
Minter
250
Token Messenger
248
Message Transmitter
246
User Wallet
214
CCFA Caller
212
Off-Chain Service
210
260

FIG. 2

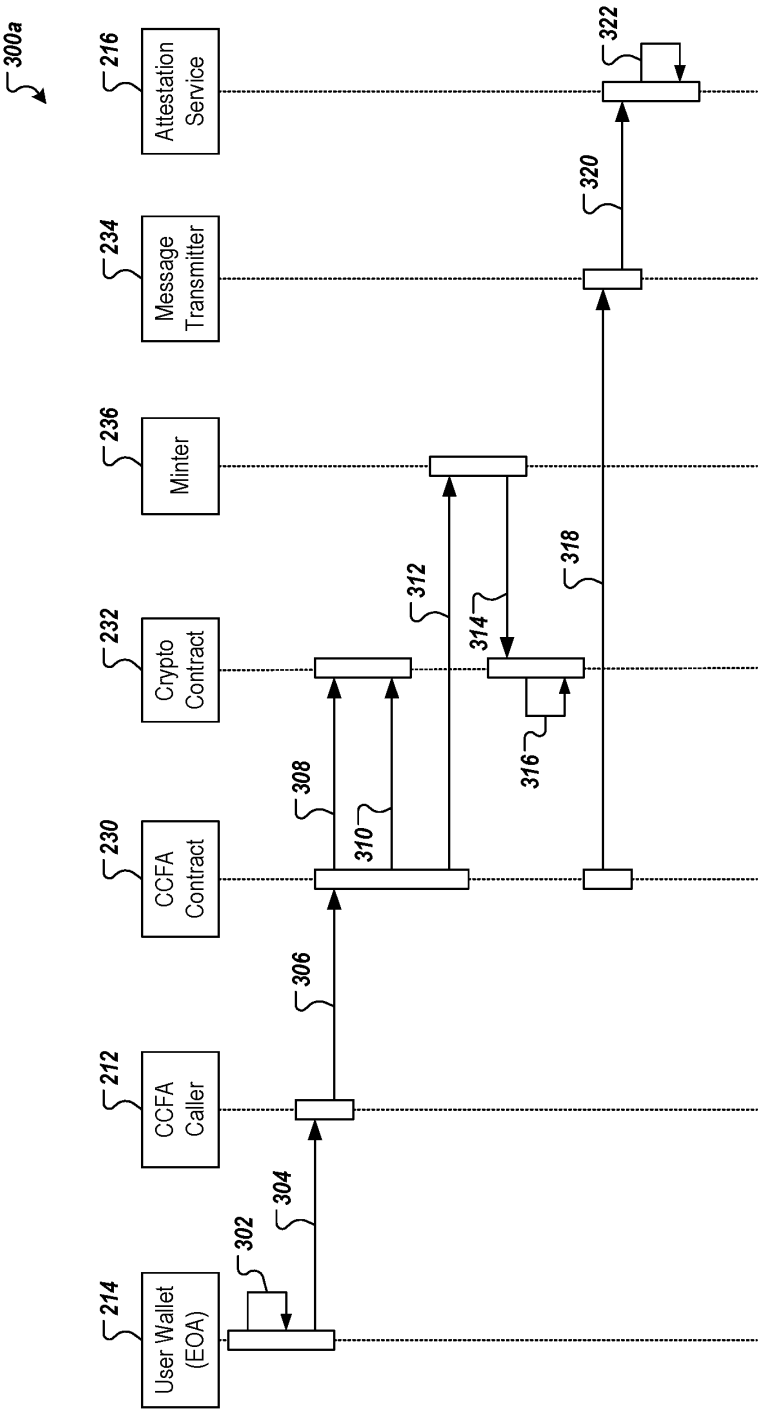
300a
216
Attestation Service
234
Message Transmitter
236
Minter
232
Crypto Contract
230
CCFA Contract
212
CCFA Caller
214
User Wallet (EOA)
302
304
306
308
310
312
314
316
318
320
322

FIG. 3A

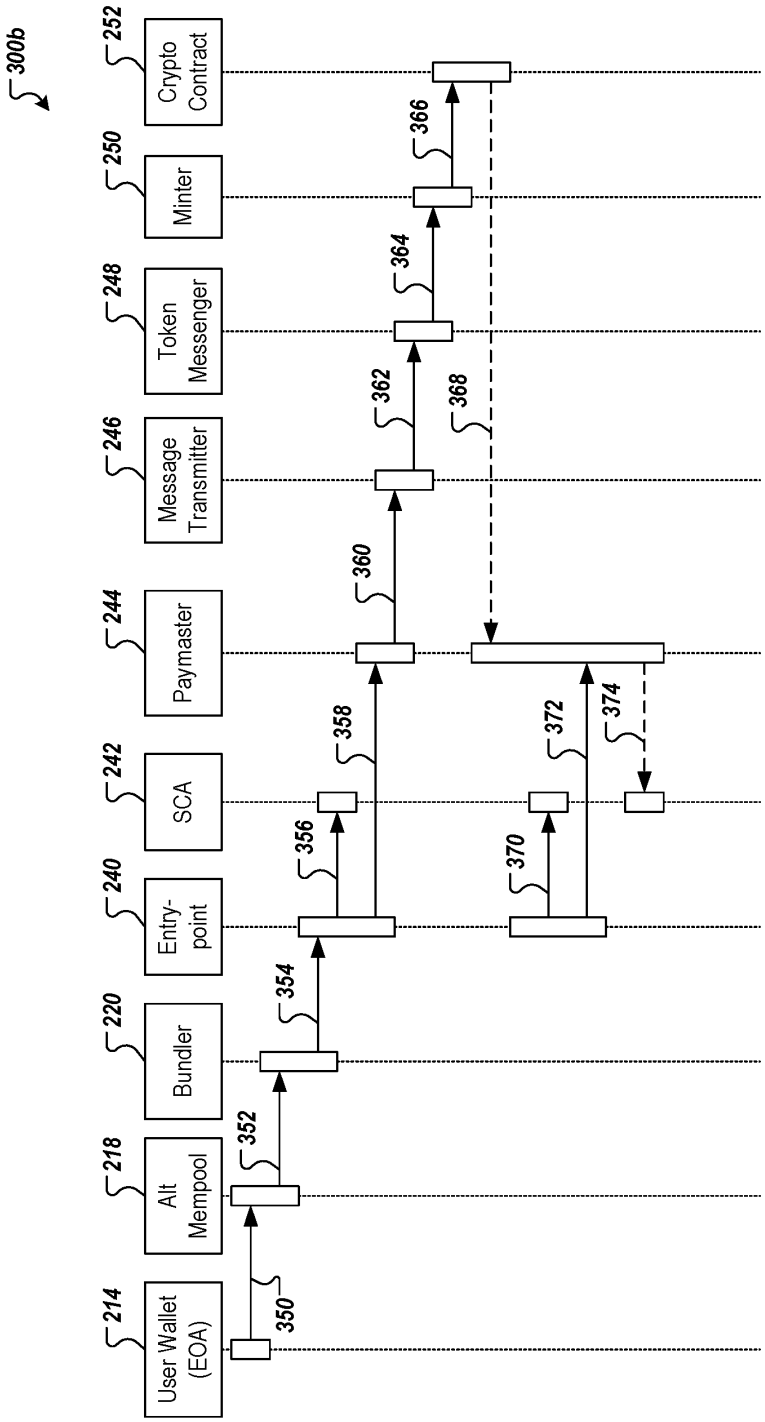
300b
214
User Wallet (EOA)
218
Alt Mempool
220
Bundler
240
Entry-point
242
SCA
244
Paymaster
246
Message Transmitter
248
Token Messenger
250
Minter
252
Crypto Contract
350
352
354
356
358
360
362
364
366
368
370
372
374

FIG. 3B

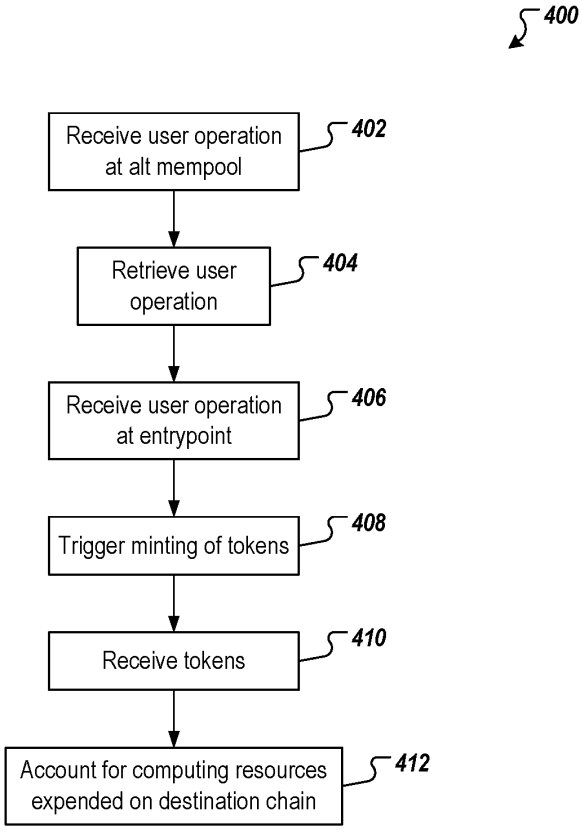
400
Receive user operation at alt mempool
402
Retrieve user operation
404
Receive user operation at entrypoint
406
Trigger minting of tokens
408
Receive tokens
410
Account for computing resources expended on destination chain
412

FIG. 4