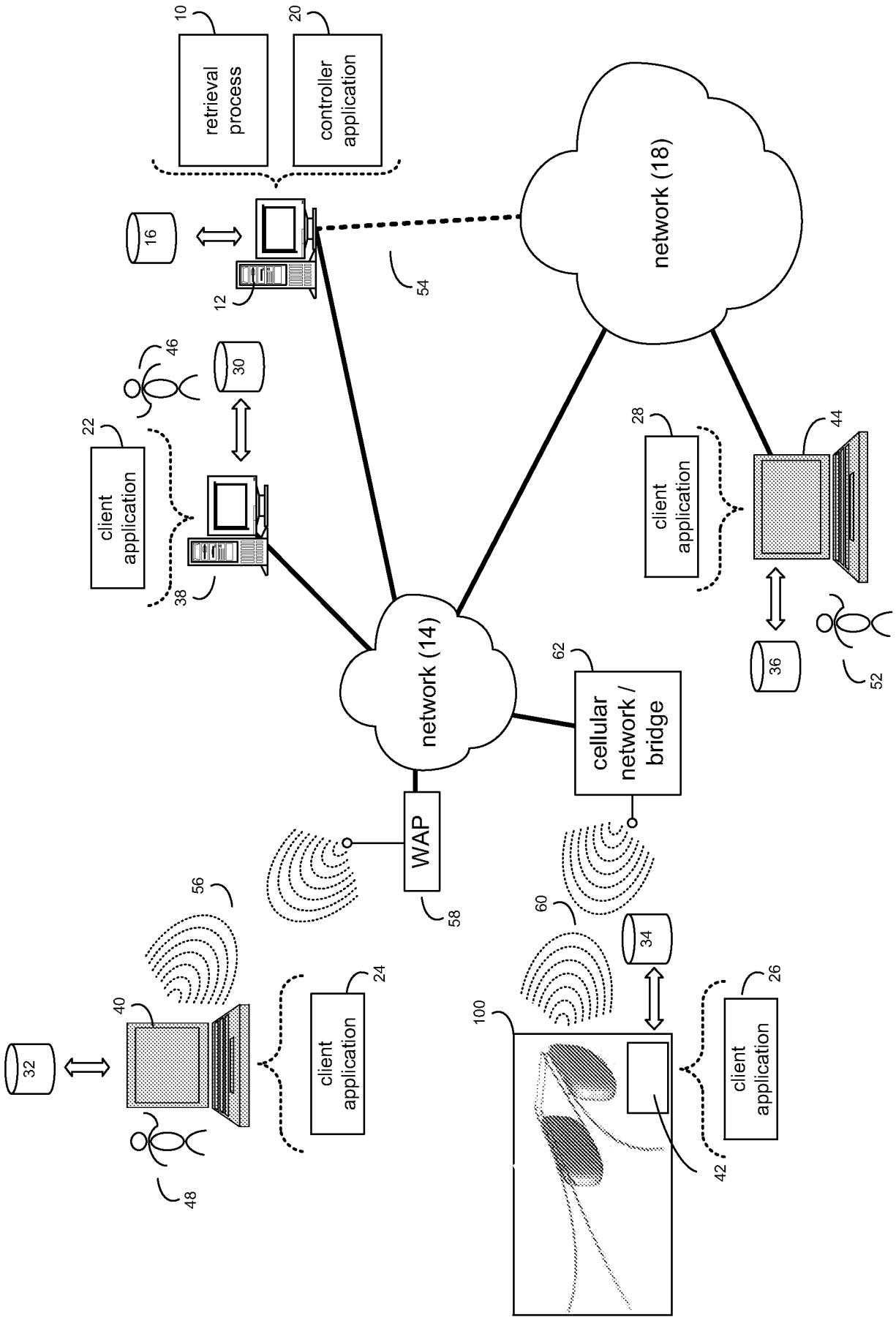
retrieval process
10
controller application
20
network (18)
16
12
54
46
30
22
client application
38
28
client application
44
36
52
network (14)
62
cellular network / bridge
WAP
58
56
60
34
32
40
client application
24
100
client application
26
42
48

FIG. 1

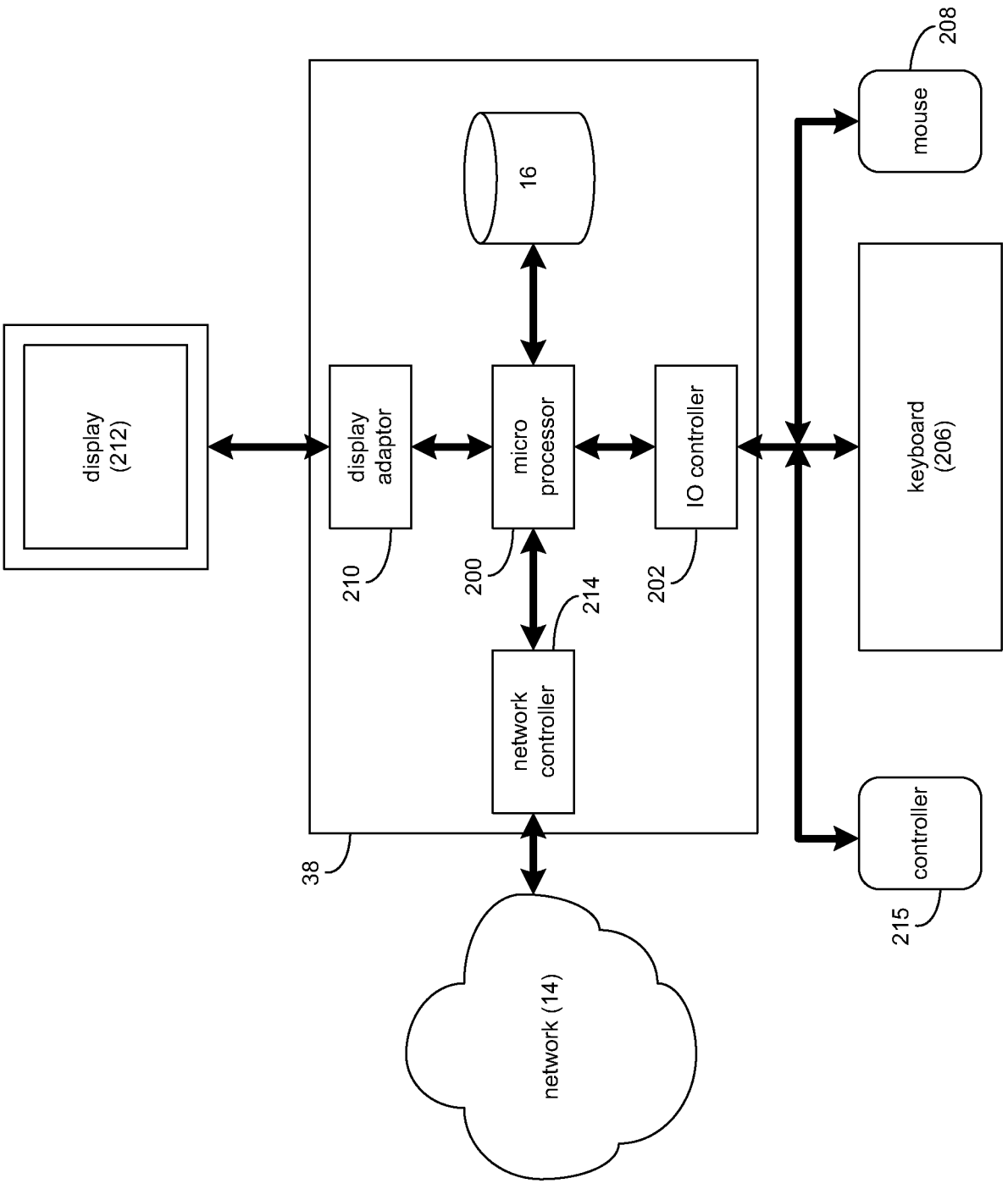
display (212)
display adaptor
micro processor
IO controller
16
mouse
208
keyboard (206)
controller
215
network controller
214
210
200
202
38
network (14)

FIG. 2

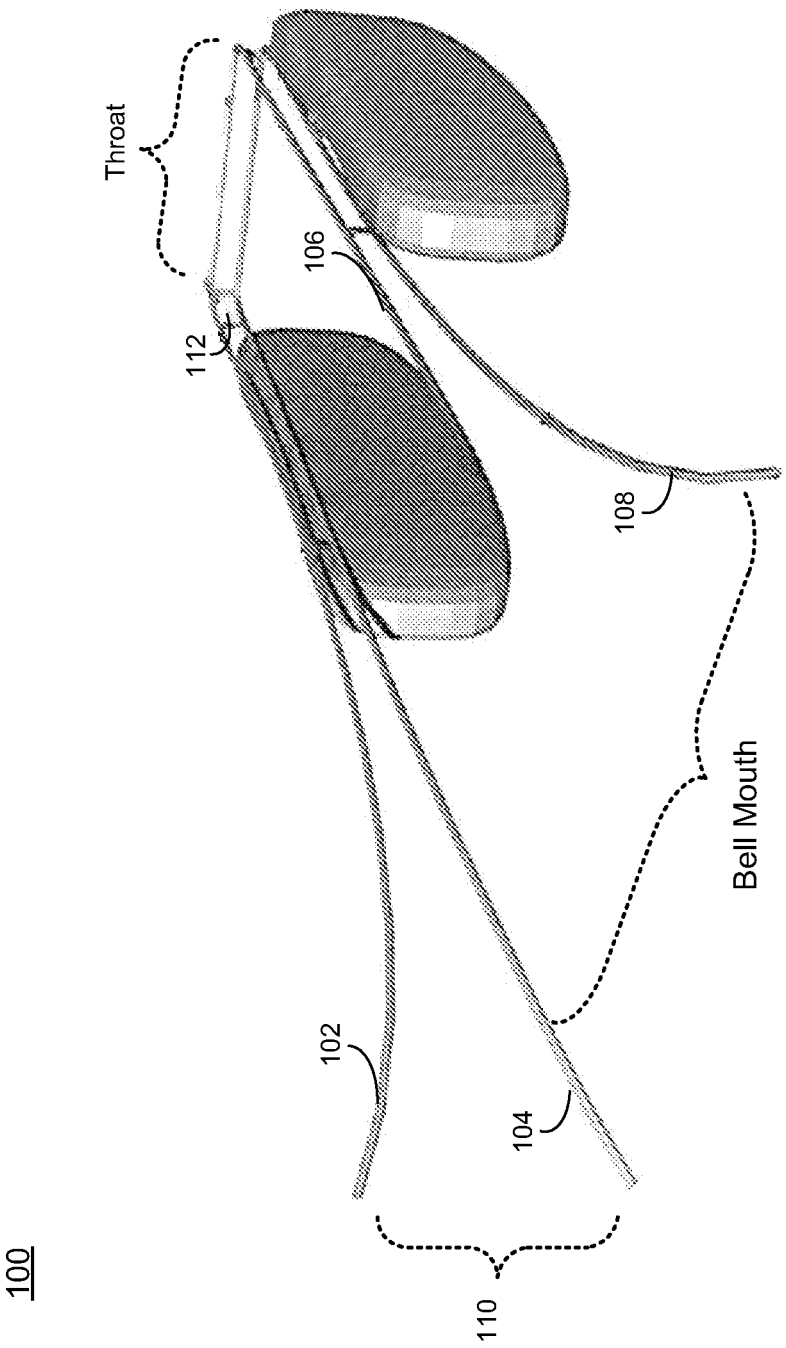

FIG. 3

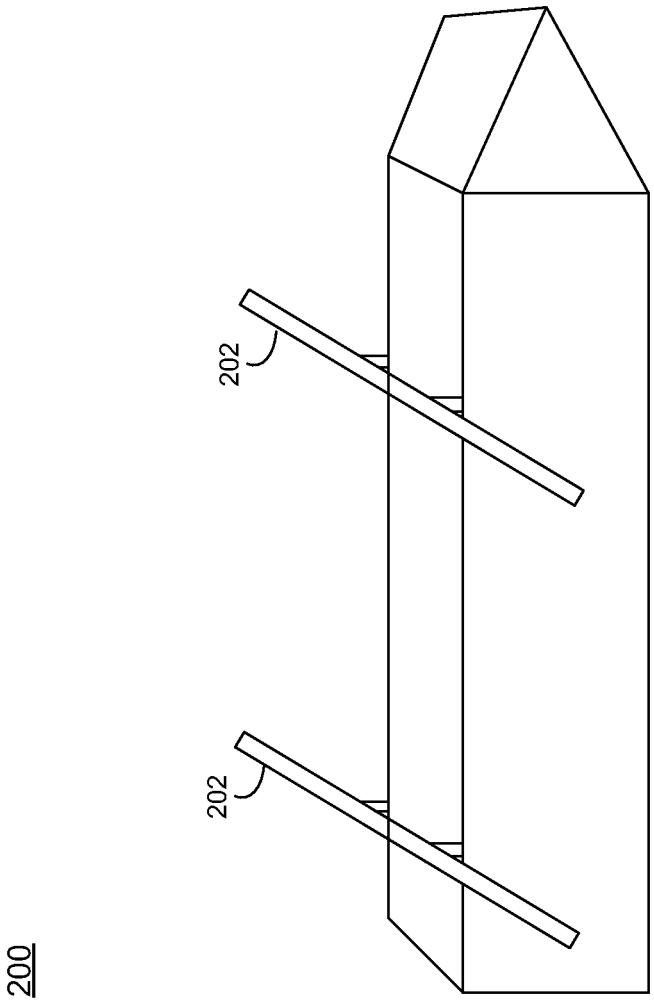

FIG. 4

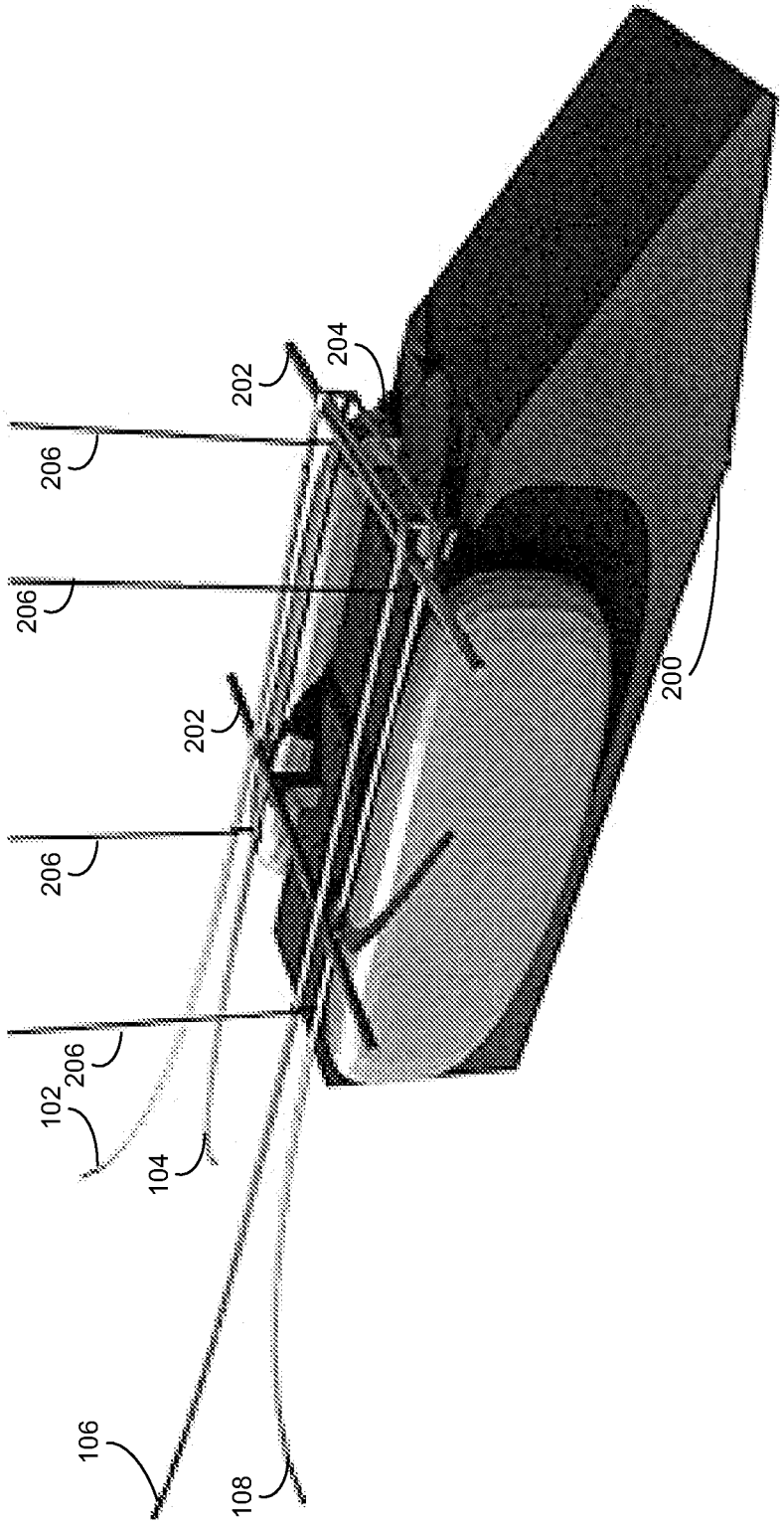

FIG. 5

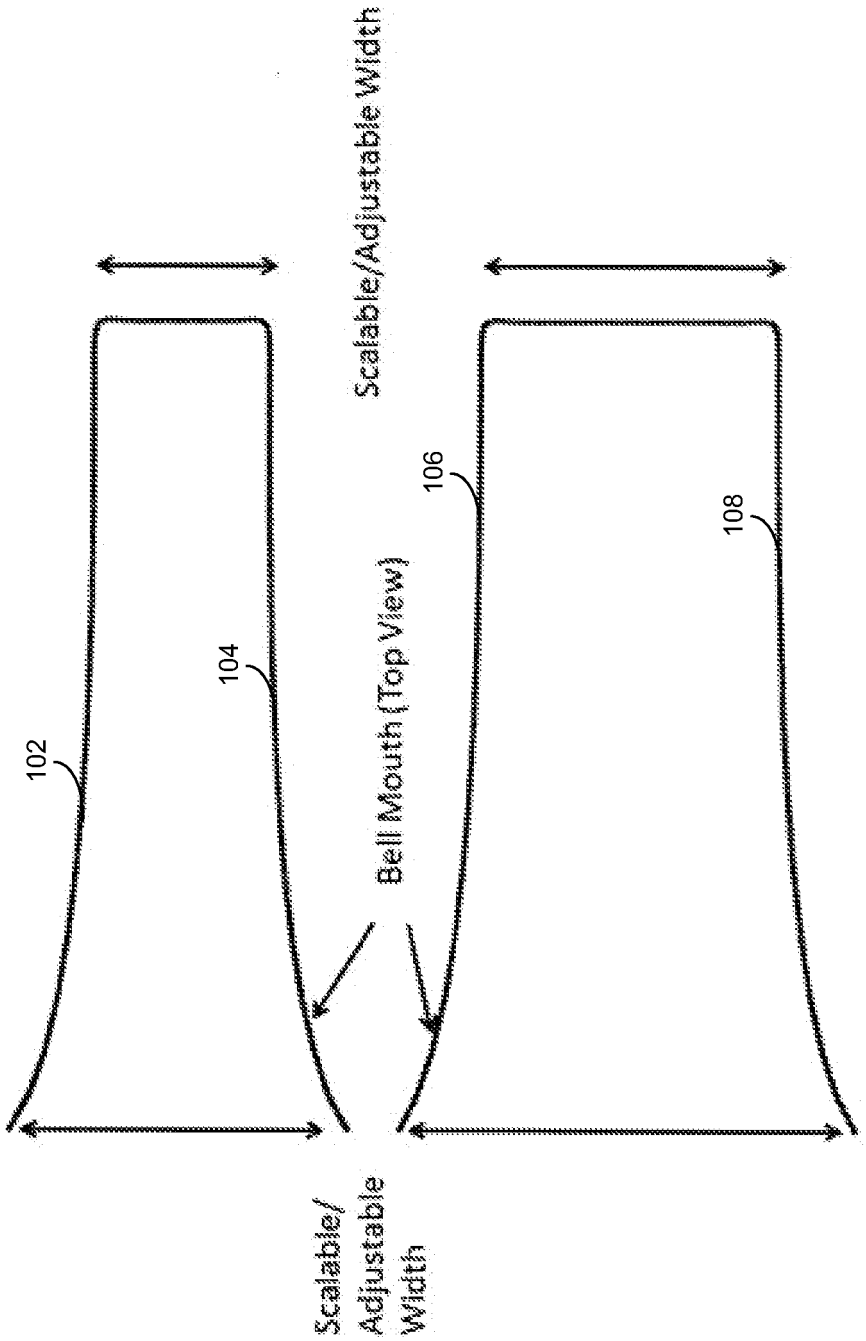
Scalable/Adjustable Width
102
104
Bell Mouth (Top View)
106
108
Scalable/
Adjustable
Width

FIG. 6

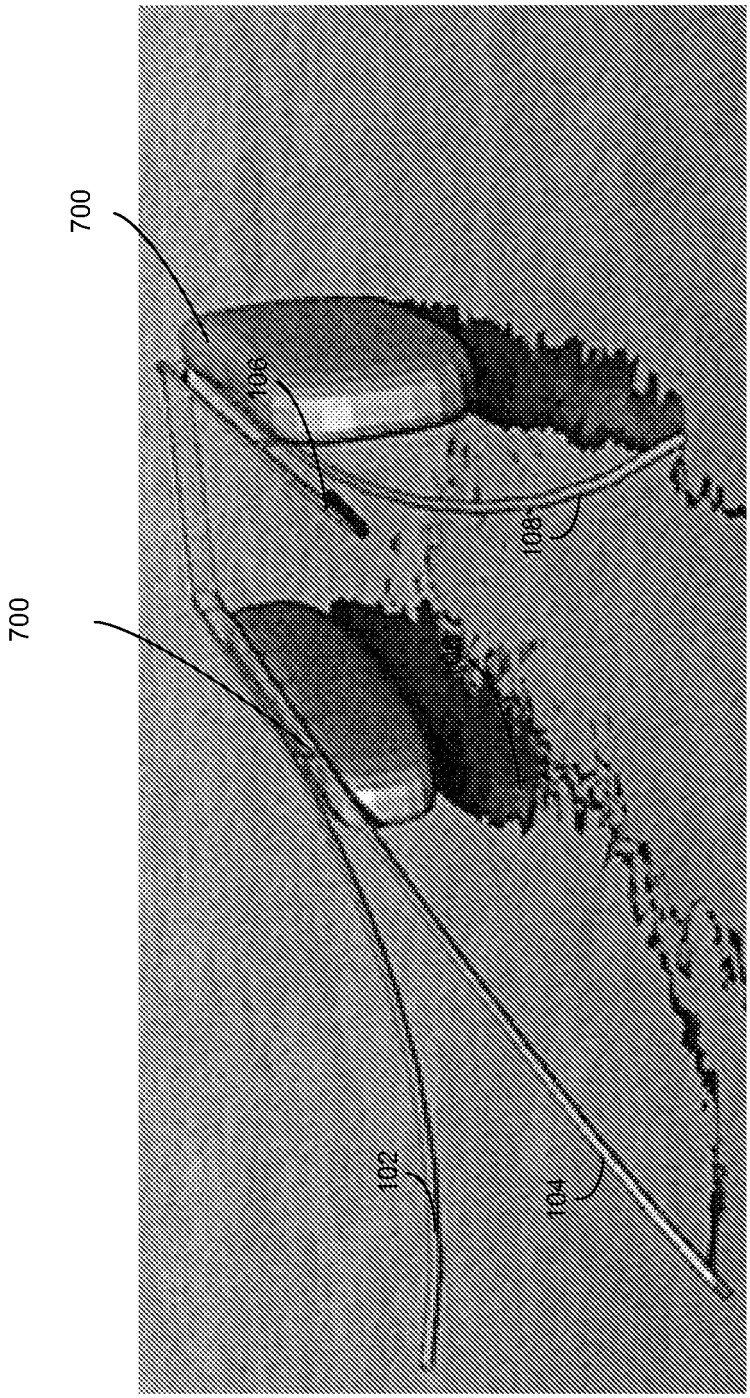

FIG. 7

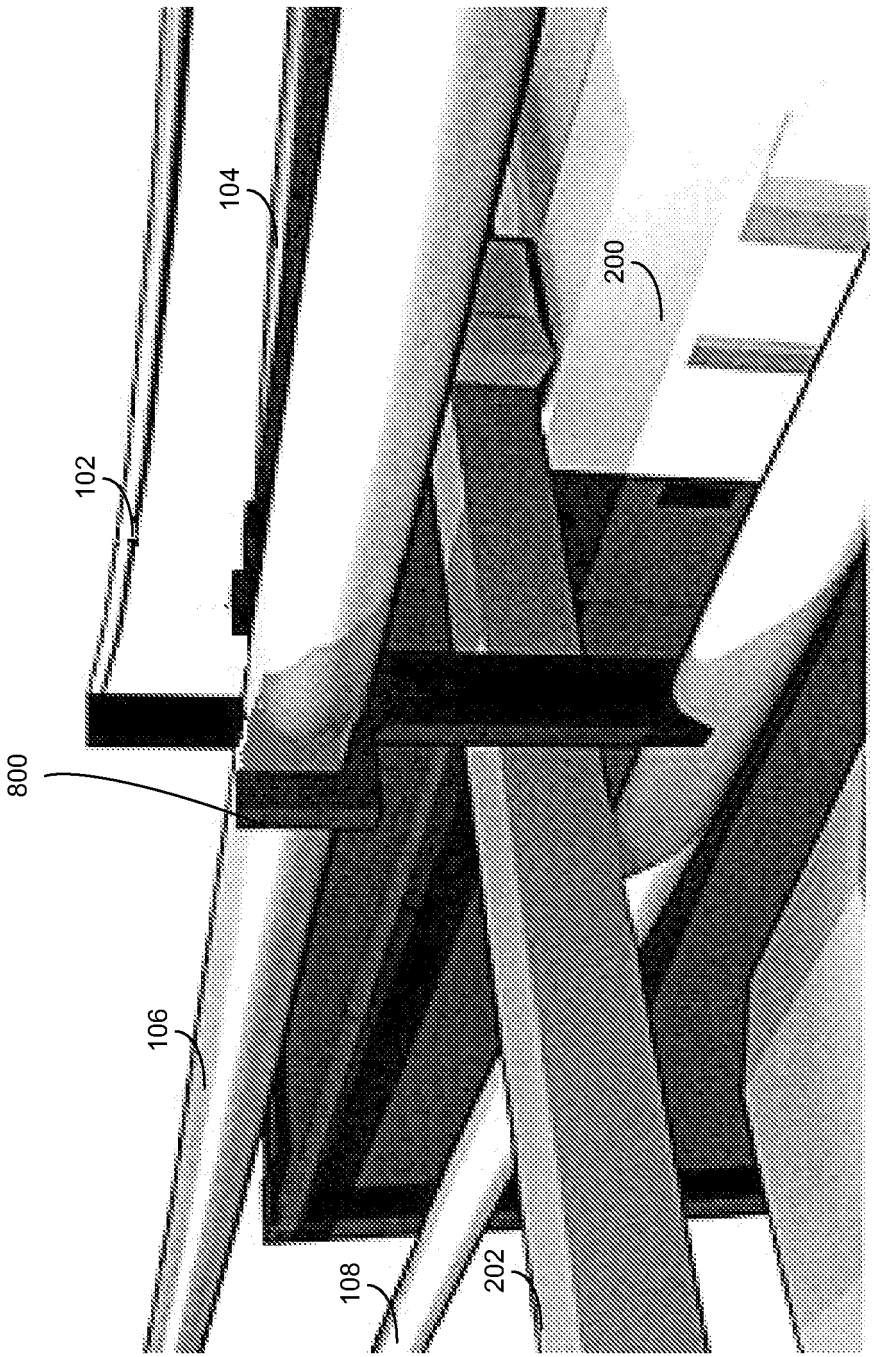

FIG. 8

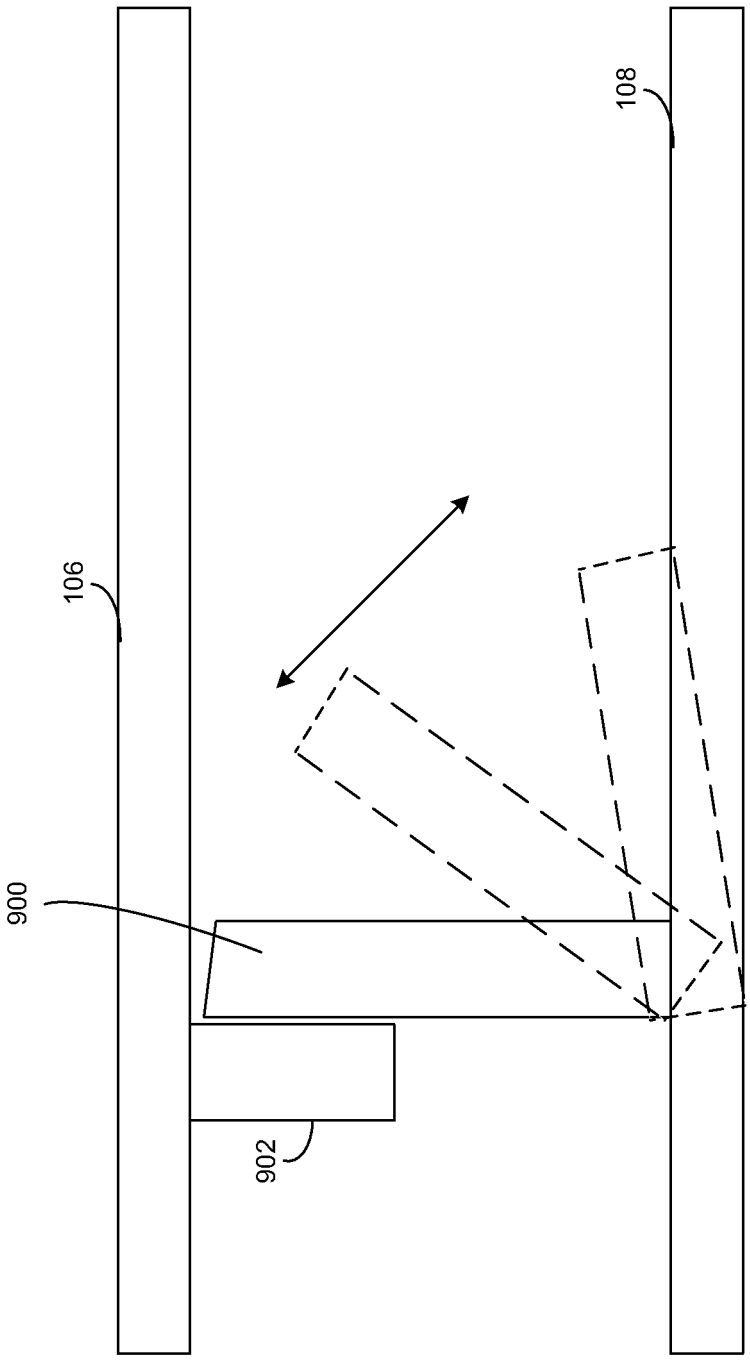

FIG. 9

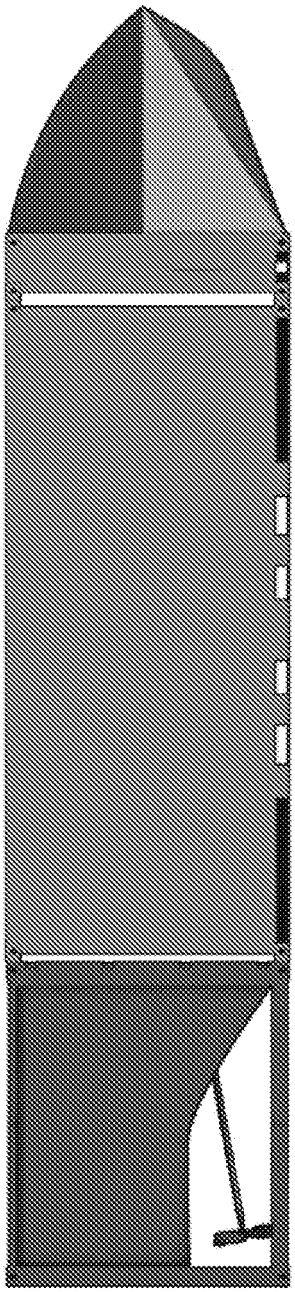

1000

FIG. 10

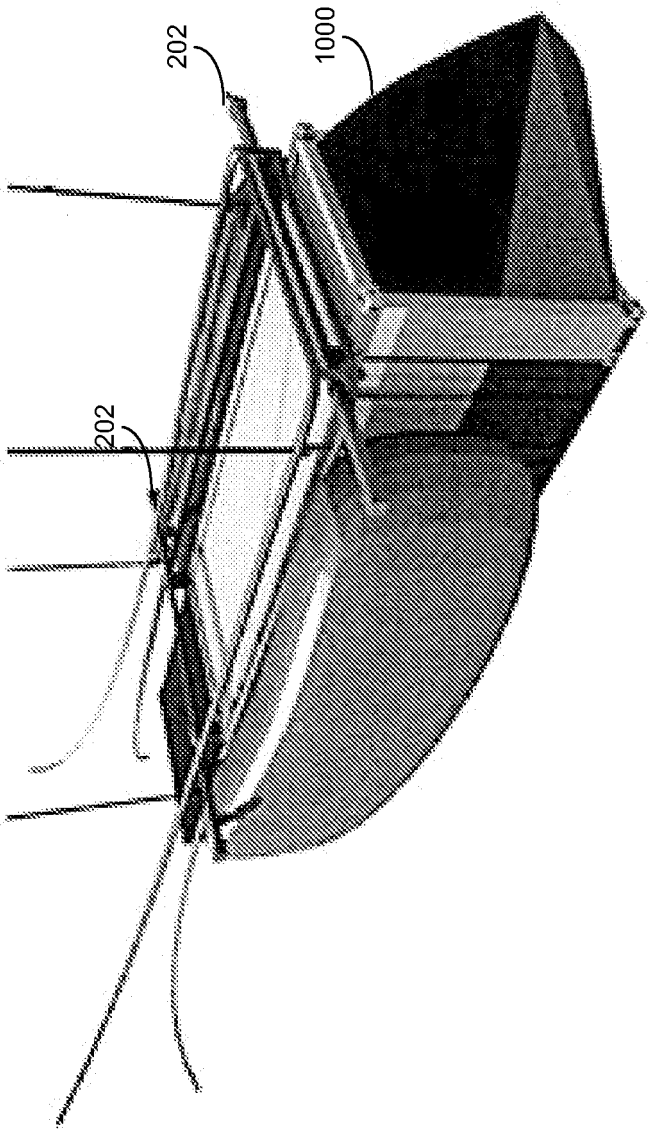

FIG. 11

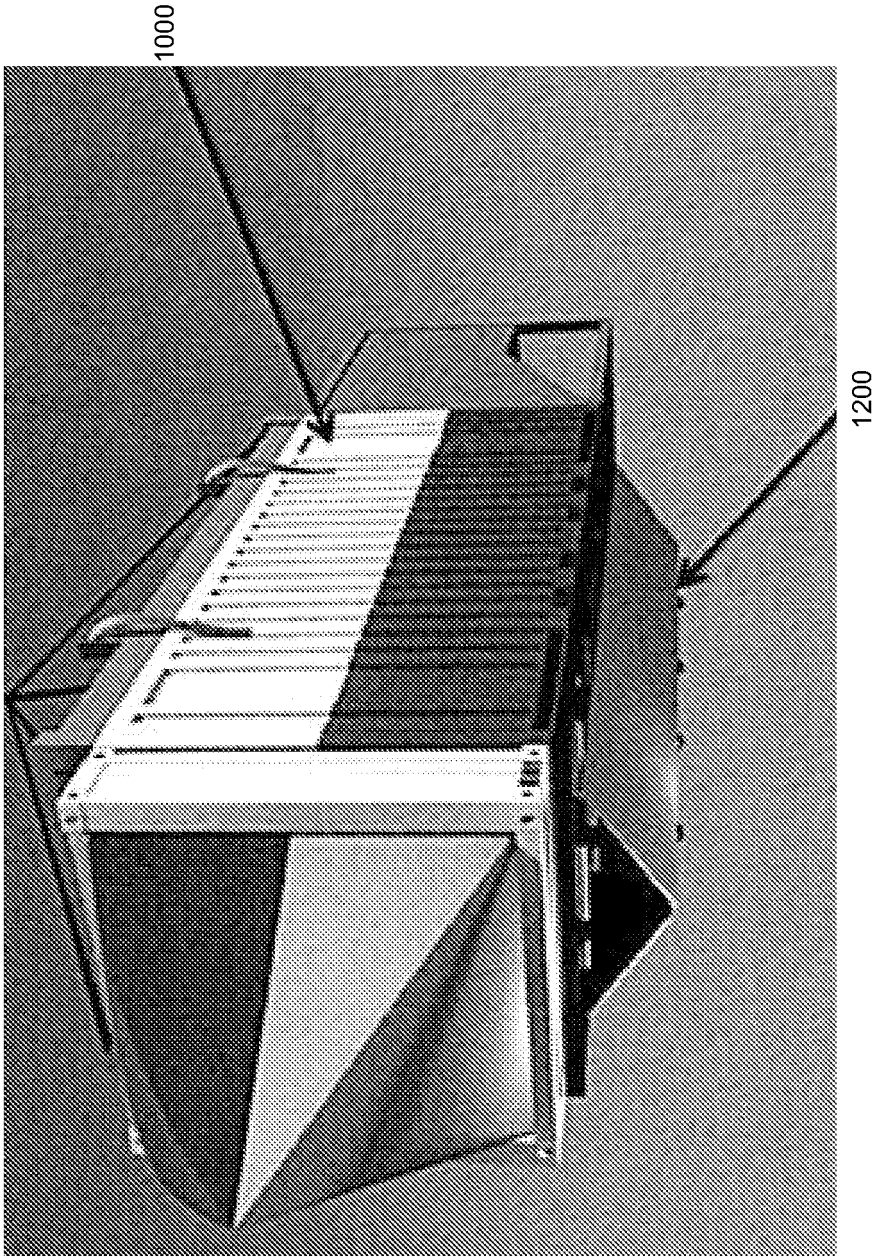

FIG. 12

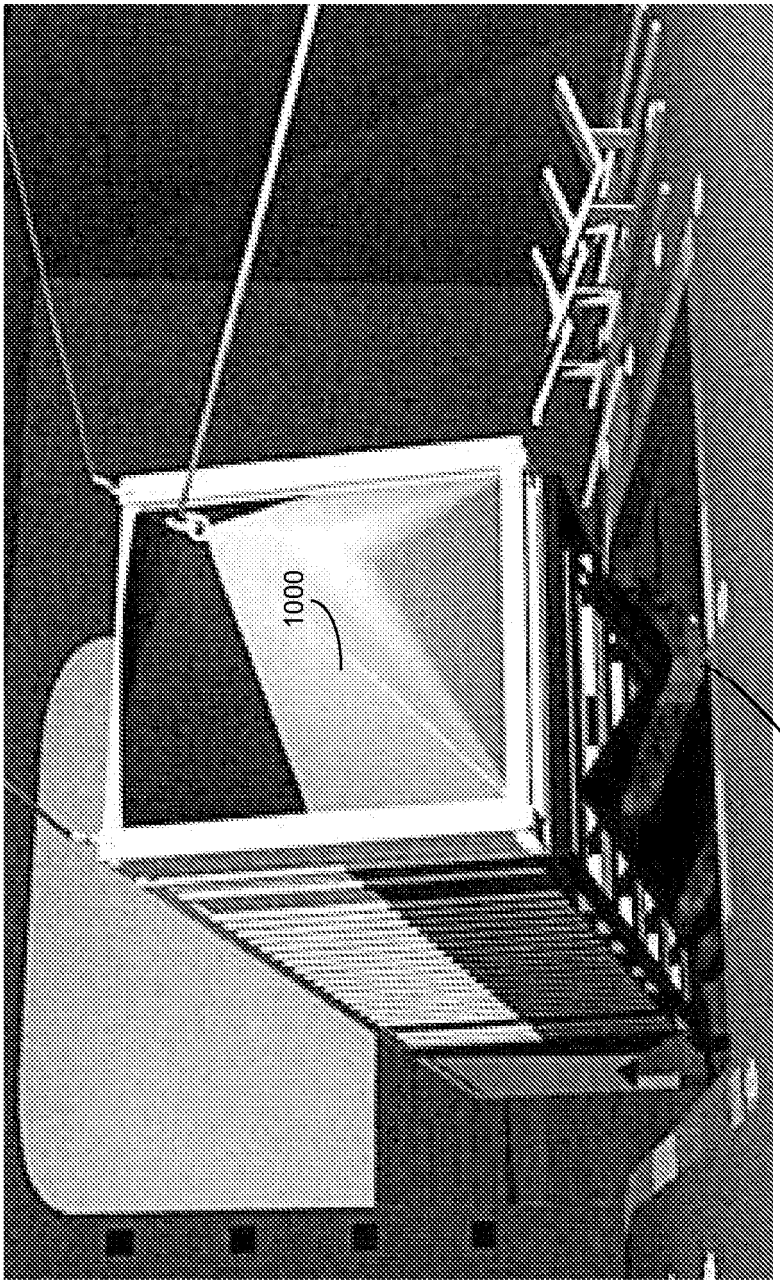

FIG. 13

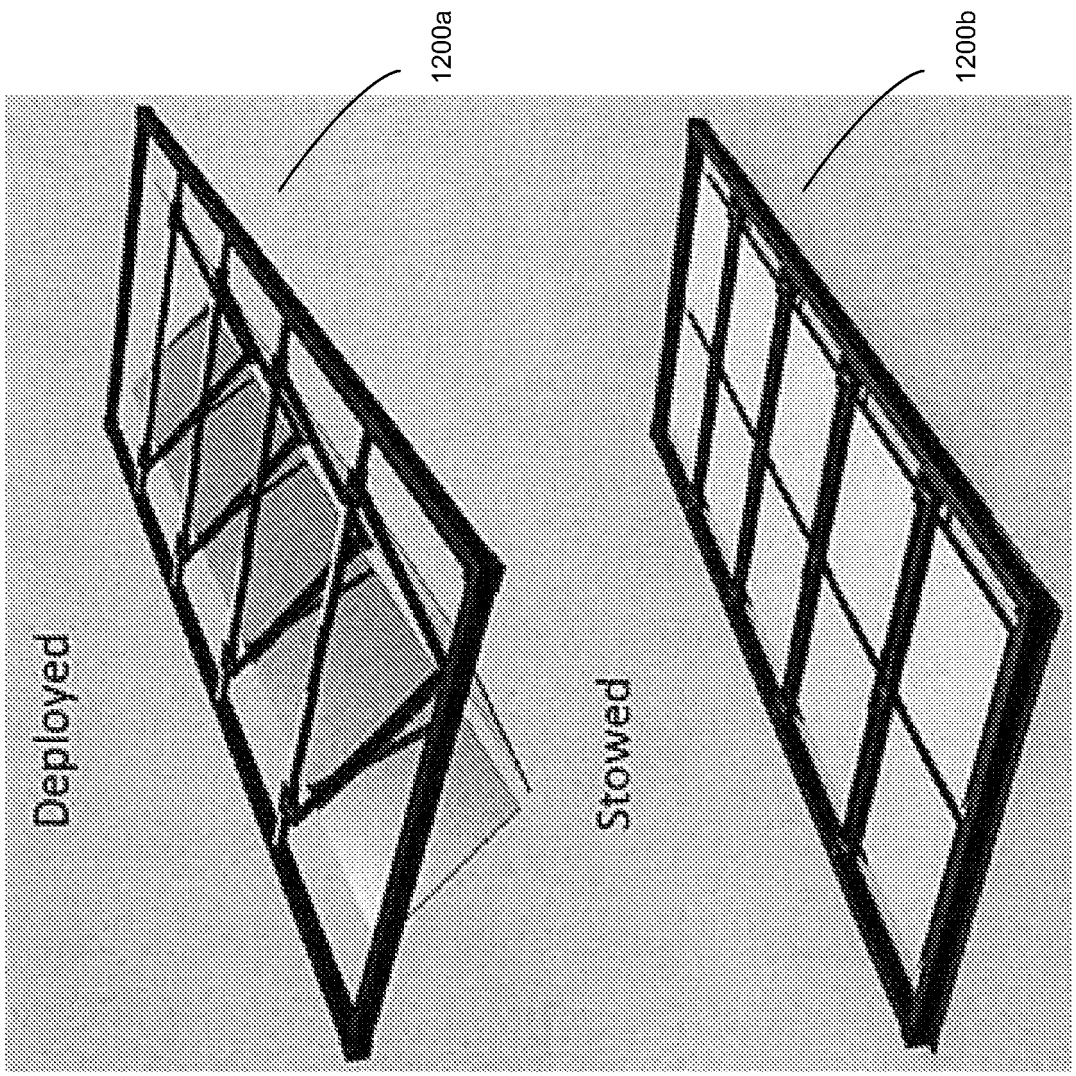

FIG. 14