(12) INTERNATIONAL APPLICATION PUBLISHED UNDER THE PATENT COOPERATION TREATY (PCT)

(19) World Intellectual Property Organization
International Bureau

(43) International Publication Date
11 May 2006 (11.05.2006)

PCT

(10) International Publication Number
WO 2006/049967 A3

(51) International Patent Classification:
C21B 7/10 (2006.01)

(21) International Application Number:
PCT/US2005/038432

(22) International Filing Date: 25 October 2005 (25.10.2005)

(25) Filing Language: English

(26) Publication Language: English

(30) Priority Data:
10/976,689 29 October 2004 (29.10.2004) US

(71) Applicant *(for all designated States except US)*: **SYSTEMS SPRAY-COOLED, INC.** [US/US]; 311 Plus Park Boulevard, Nashville, Tennessee 37217 (US).

(72) Inventors; and
(75) Inventors/Applicants *(for US only)*: **ARTHUR, Mark, Thomas** [US/US]; 725 Harrow Lane, Franklin, Tennessee 37064 (US). **CAMPBELL, Michael, J.** [US/US]; 104 Cresthaven Ct., Hendersonville, Tennessee 37075 (US). **WARD, Troy, D.** [US/US]; 1304 Windmere Ct., Franklin, Tennessee 37064 (US).

(74) Agent: **SHOUSE, Emily A.,**; Waddey & Patterson, Roundabout Plaza, 1600 Division Street, Suite 500, Nashville, Tennessee 37203 (US).

(81) Designated States *(unless otherwise indicated, for every kind of national protection available)*: AE, AG, AL, AM, AT, AU, AZ, BA, BB, BG, BR, BW, BY, BZ, CA, CH, CN, CO, CR, CU, CZ, DE, DK, DM, DZ, EC, EE, EG, ES, FI, GB, GD, GE, GH, GM, HR, HU, ID, IL, IN, IS, JP, KE, KG, KM, KP, KR, KZ, LC, LK, LR, LS, LT, LU, LV, LY, MA, MD, MG, MK, MN, MW, MX, MZ, NA, NG, NI, NO, NZ, OM, PG, PH, PL, PT, RO, RU, SC, SD, SE, SG, SK, SL, SM, SY, TJ, TM, TN, TR, TT, TZ, UA, UG, US, UZ, VC, VN, YU, ZA, ZM, ZW.

(84) Designated States *(unless otherwise indicated, for every kind of regional protection available)*: ARIPO (BW, GH, GM, KE, LS, MW, MZ, NA, SD, SL, SZ, TZ, UG, ZM, ZW), Eurasian (AM, AZ, BY, KG, KZ, MD, RU, TJ, TM), European (AT, BE, BG, CH, CY, CZ, DE, DK, EE, ES, FI, FR, GB, GR, HU, IE, IS, IT, LT, LU, LV, MC, NL, PL, PT, RO, SE, SI, SK, TR), OAPI (BF, BJ, CF, CG, CI, CM, GA, GN, GQ, GW, ML, MR, NE, SN, TD, TG).

Published:
— *with international search report*

(88) Date of publication of the international search report:
19 October 2006

For two-letter codes and other abbreviations, refer to the "Guidance Notes on Codes and Abbreviations" appearing at the beginning of each regular issue of the PCT Gazette.

(54) Title: IMPROVED FURNACE COOLING SYSTEM AND METHOD

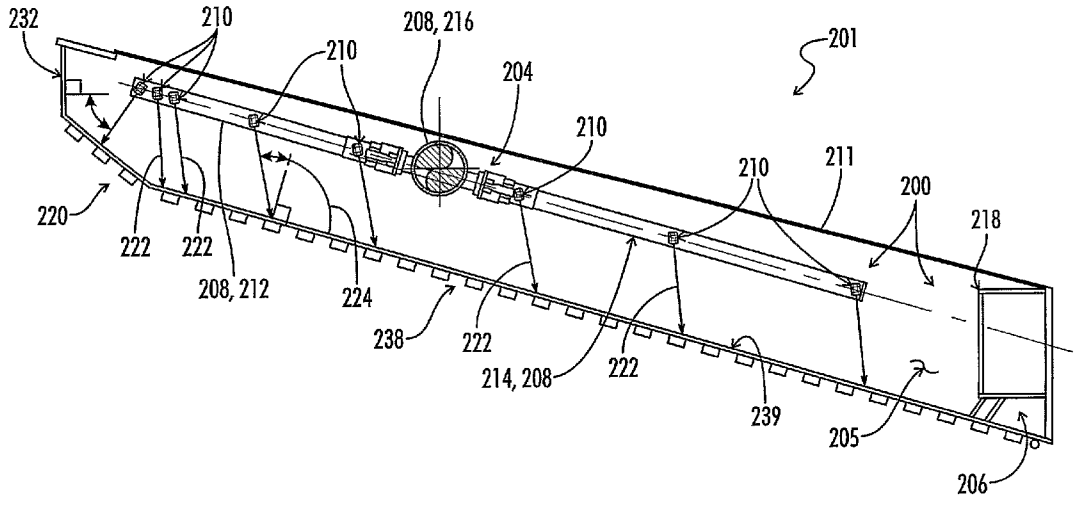

(57) Abstract: A cooling system (200) for the distribution and collection of a fluid coolant in a metallurgical vessel used in the processing of molten materials. The cooling system (200) comprises a distribution system (204) including an intake manifold (216), a plurality of headers (212, 214) attached to the intake manifold, and a plurality of distribution dispensers (210) positioned along each header. A collection system (206), including a collection manifold (218), is positioned to collect the fluid coolant (202). The distribution dispensers (210) are positioned to direct the fluid coolant (202) towards the collection manifold (218) and utilize the majority of the kinetic energy contained within the coolant to direct the coolant towards the collection manifold.

WO 2006/049967 A3