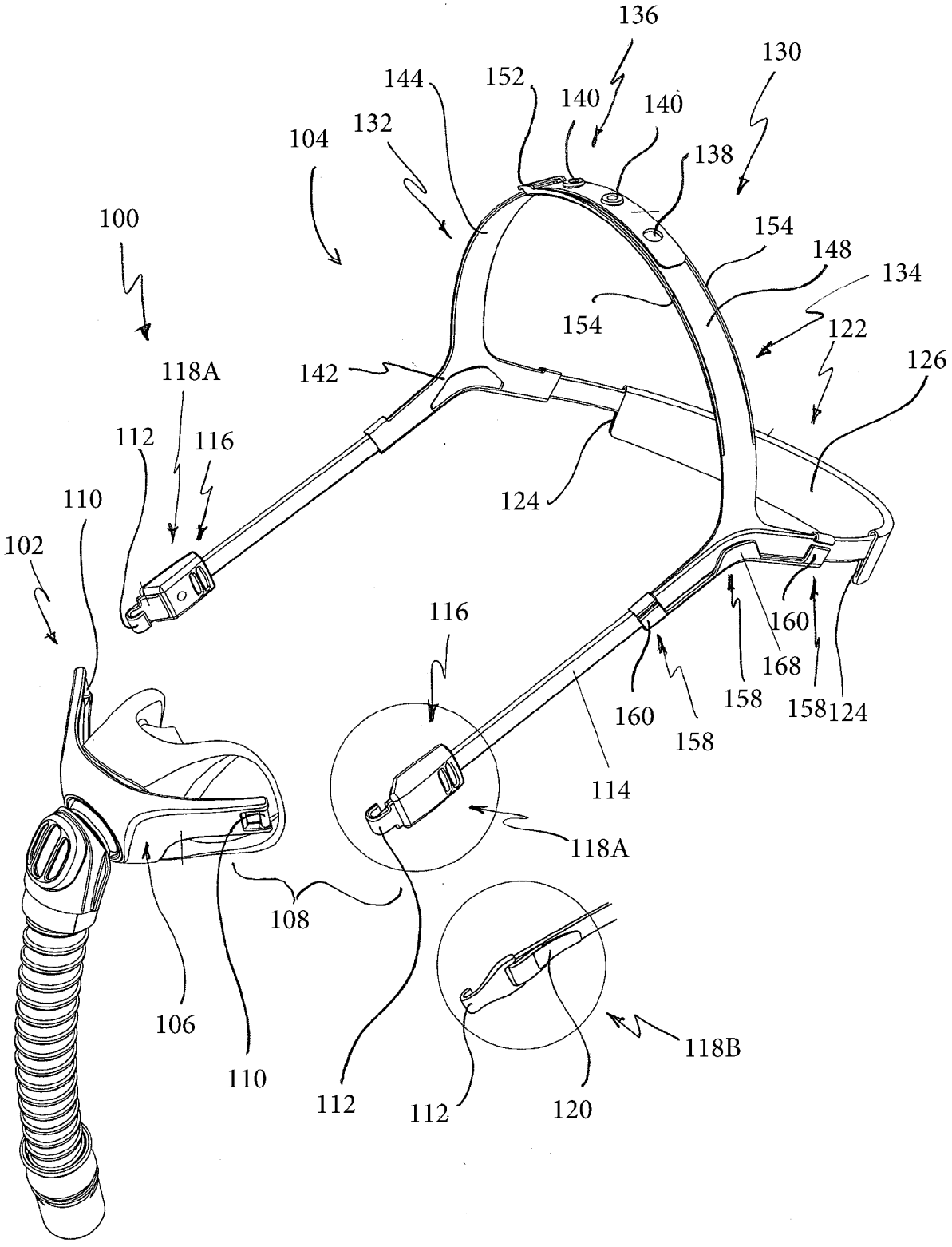
136
130
144
152
140
140
132
104
138
100
154
148
134
154
122
118A
142
126
112
116
124
110
102
116
160
168
158
158
160
124
158
114
118A
108
106
110
112
112
120
118B

FIGURE 1

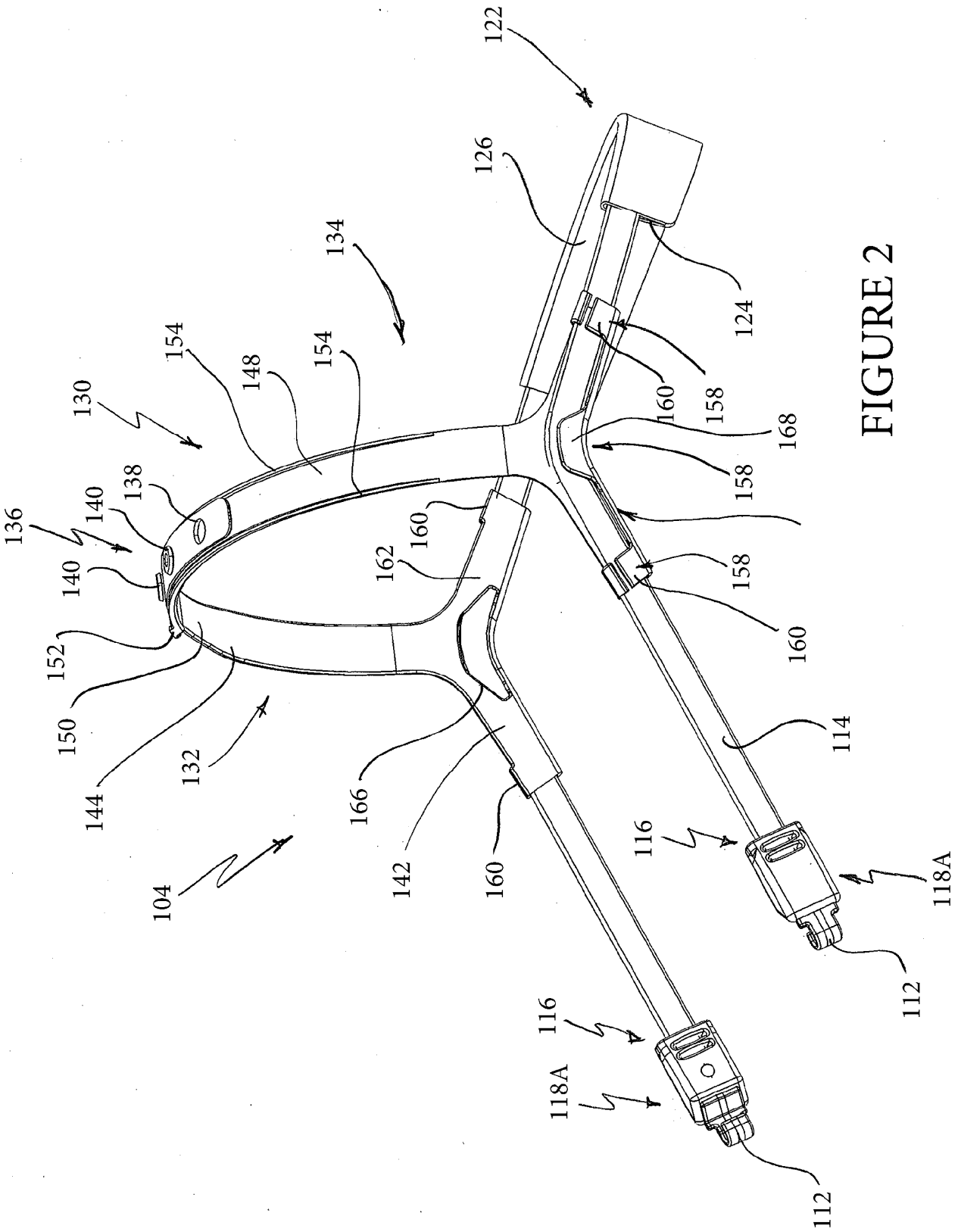
122
126
124
134
154
148
154
130
138
140
136
140
152
150
144
132
104
162
160
166
142
160
158
160
168
158
158
160
114
116
118A
112
116
118A
112

FIGURE 2

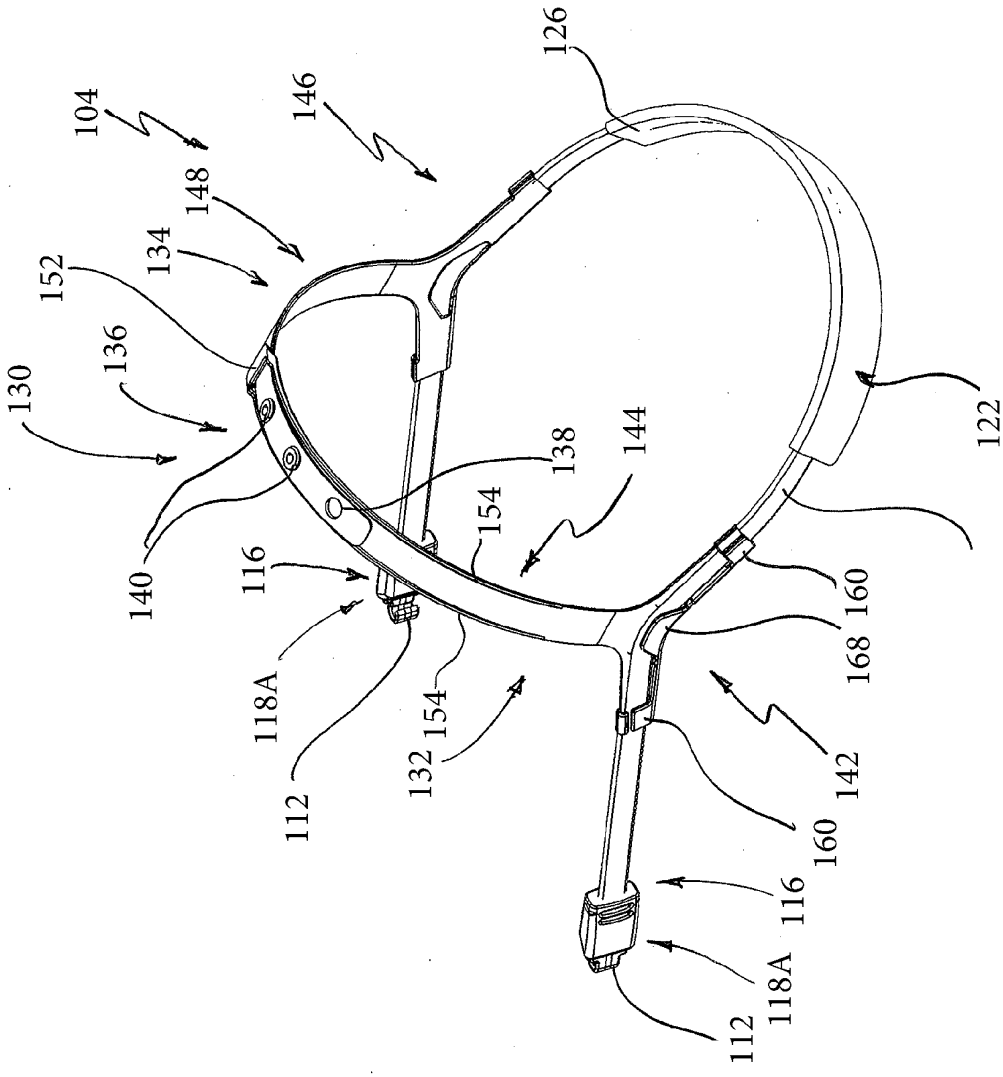
104
146
126
148
134
152
136
130
138
144
122
154
140
116
160
118A
168
154
132
142
112
160
116
118A
112

FIGURE 3

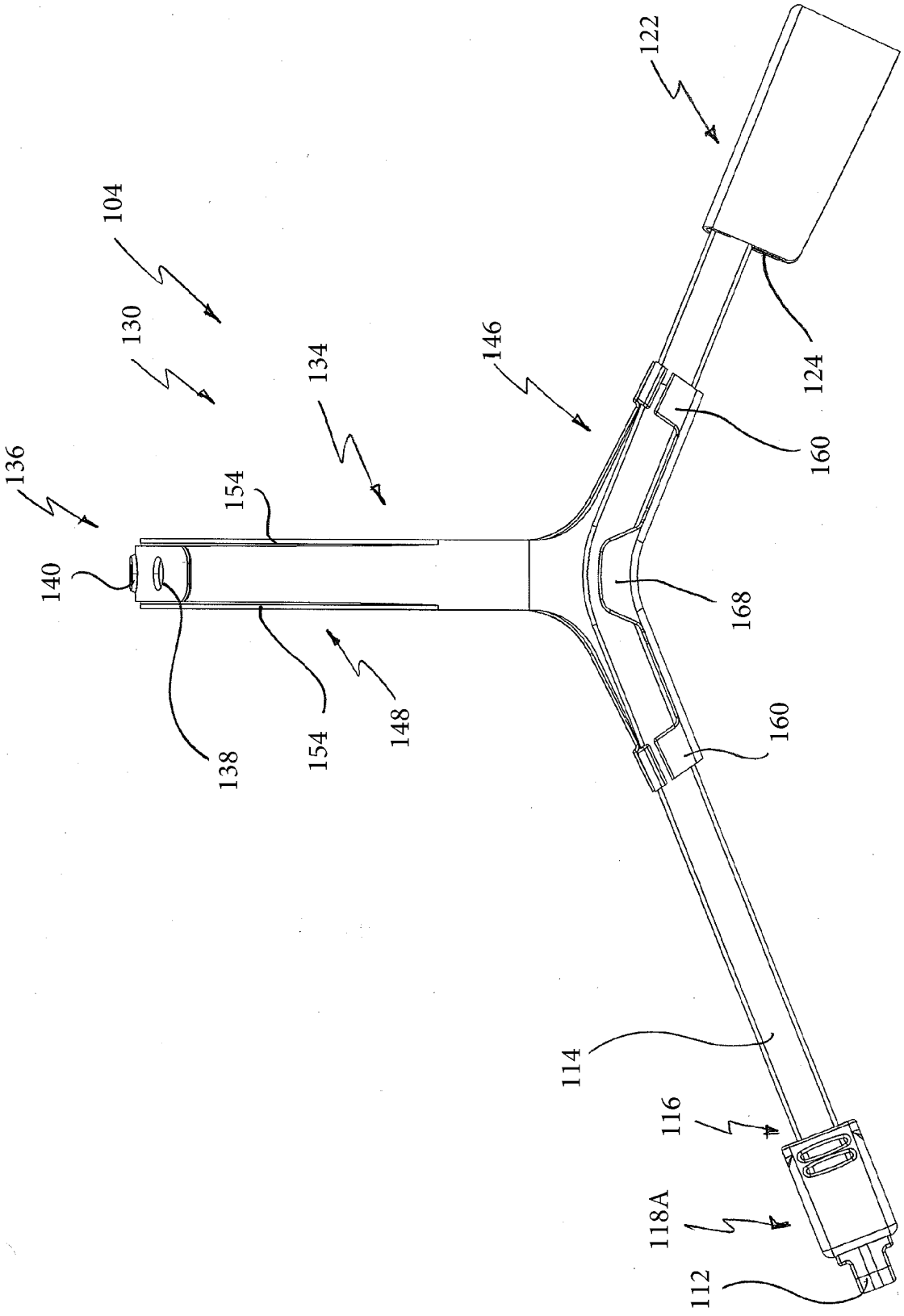
104
130
136
140
138
154
134
154
148
146
122
124
160
168
160
114
116
118A
112

FIGURE 4

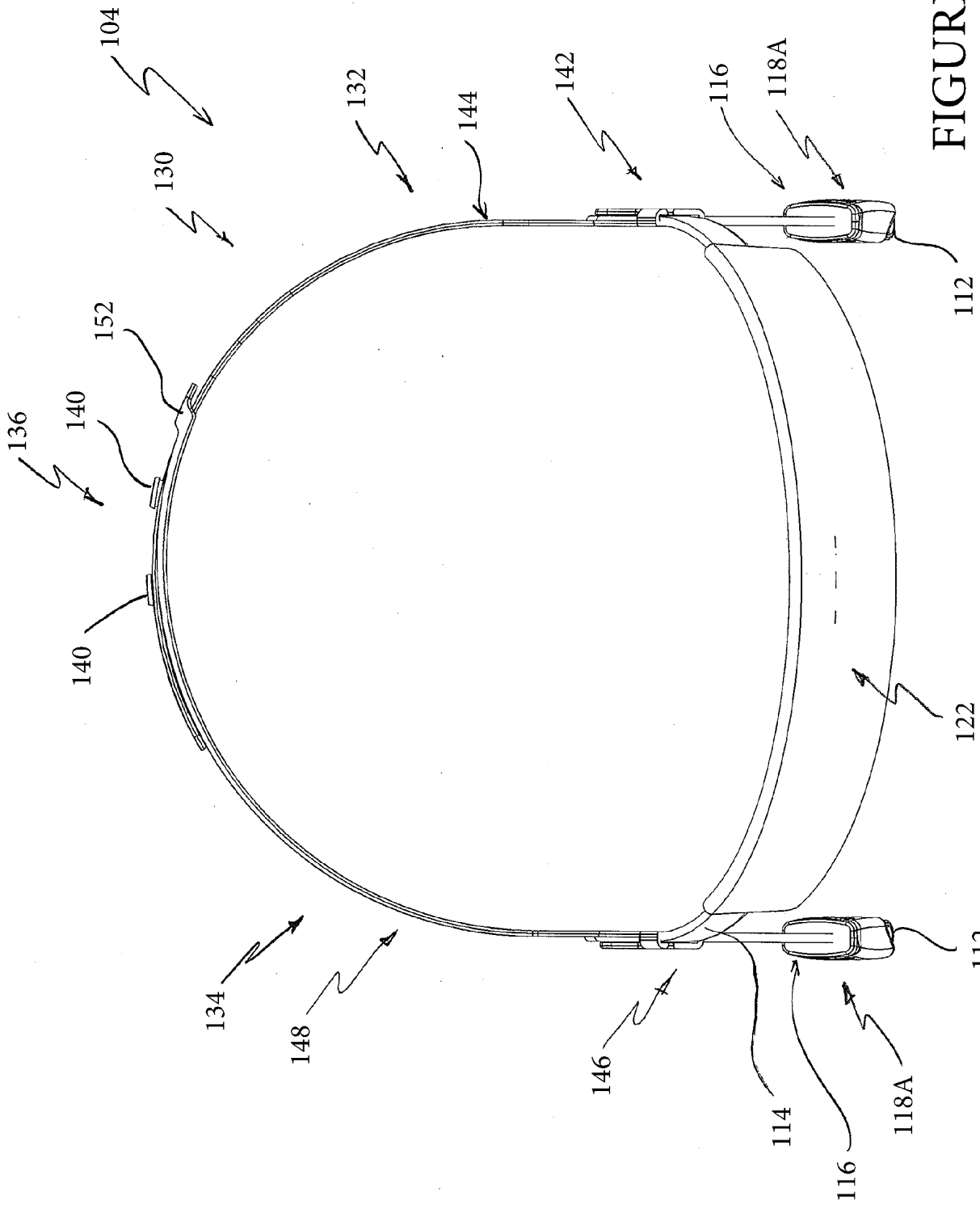
104
130
132
144
142
116
118A
112
152
136
140
140
134
148
146
114
116
118A
112
122

FIGURE 5

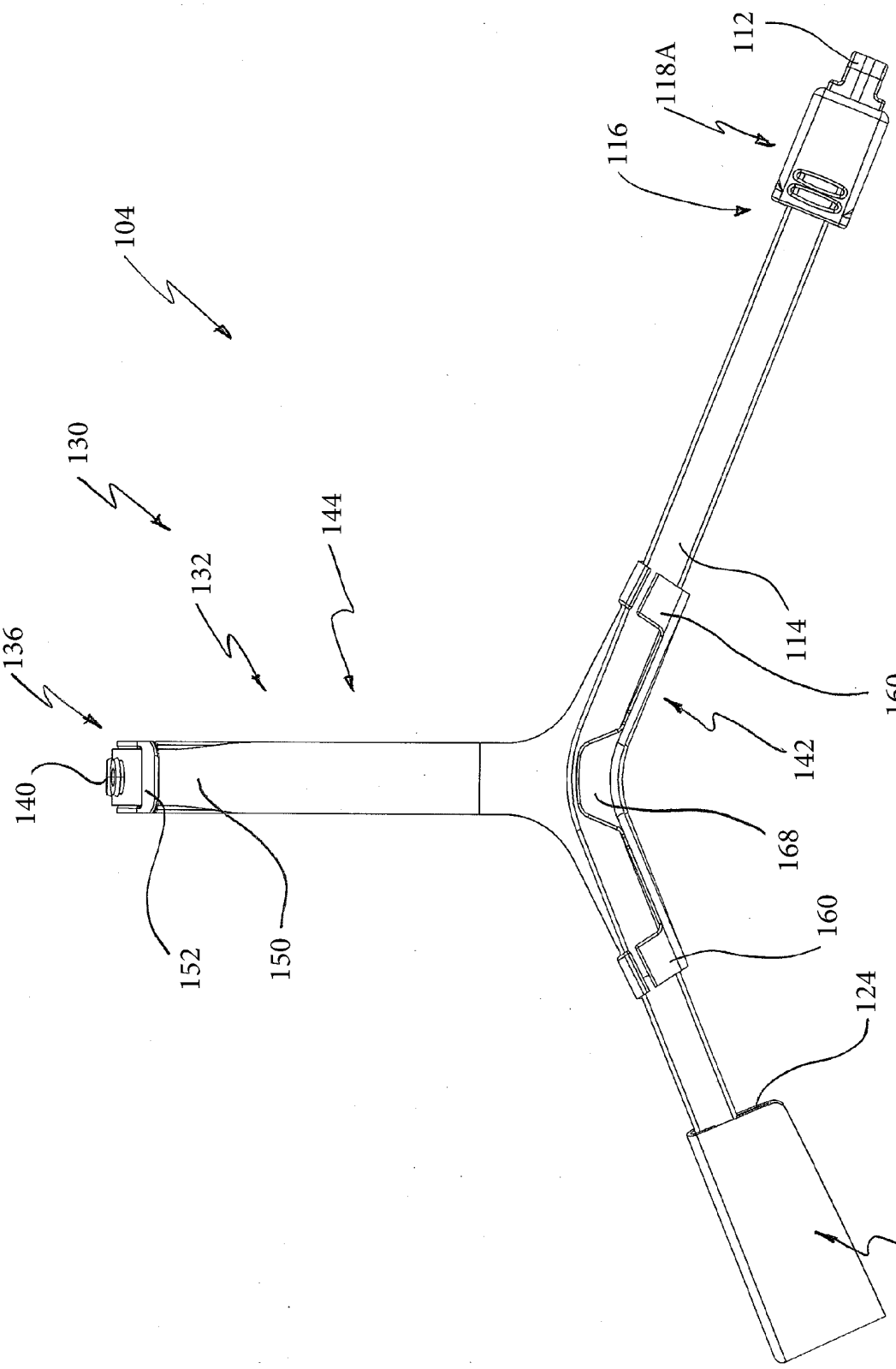
112
118A
116
104
130
144
132
136
114
160
140
142
168
152
150
160
124
122

FIGURE 6

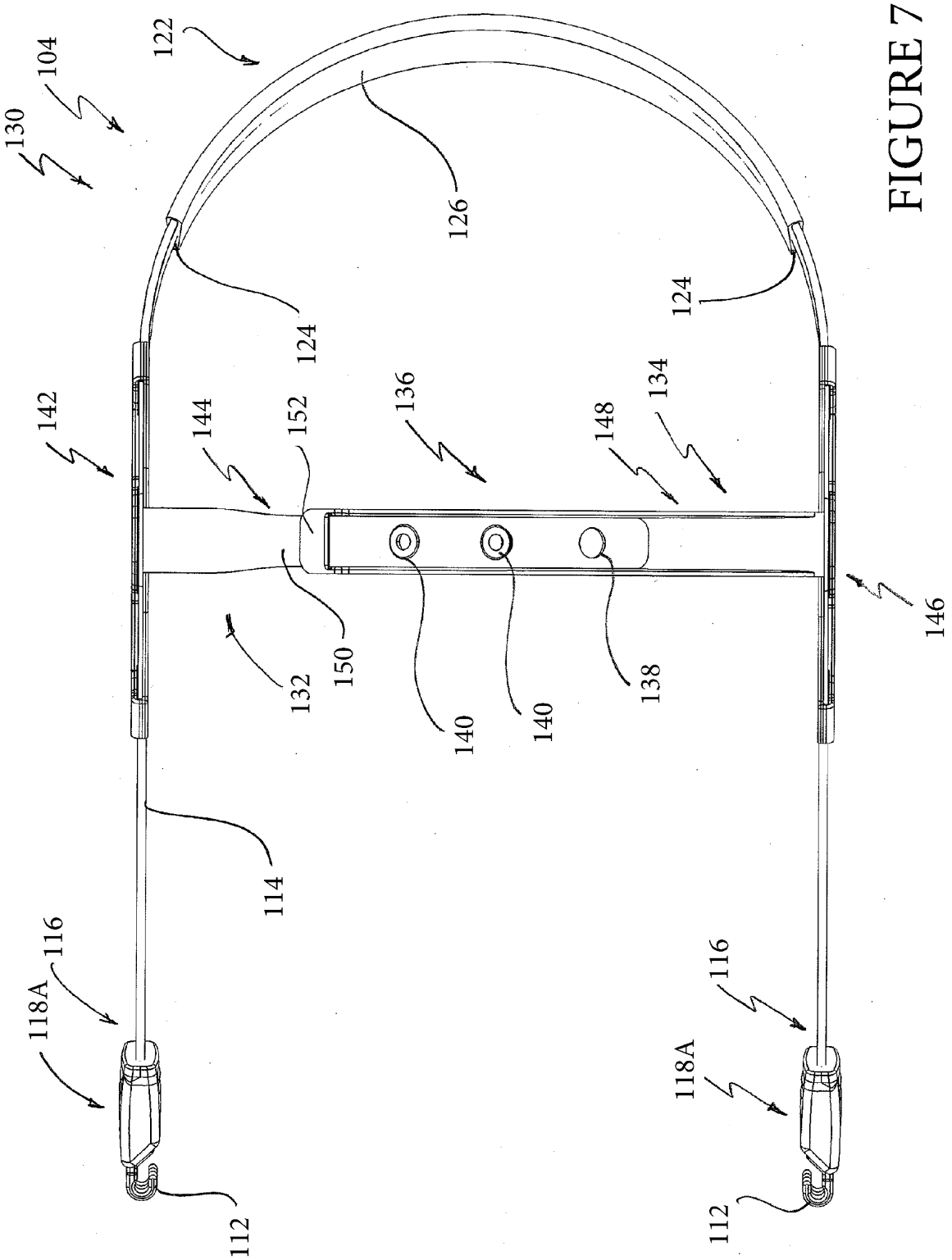
130
104
122
126
124
124
142
144
152
136
148
134
146
132
150
140
140
138
114
116
118A
116
118A
112
112

FIGURE 7

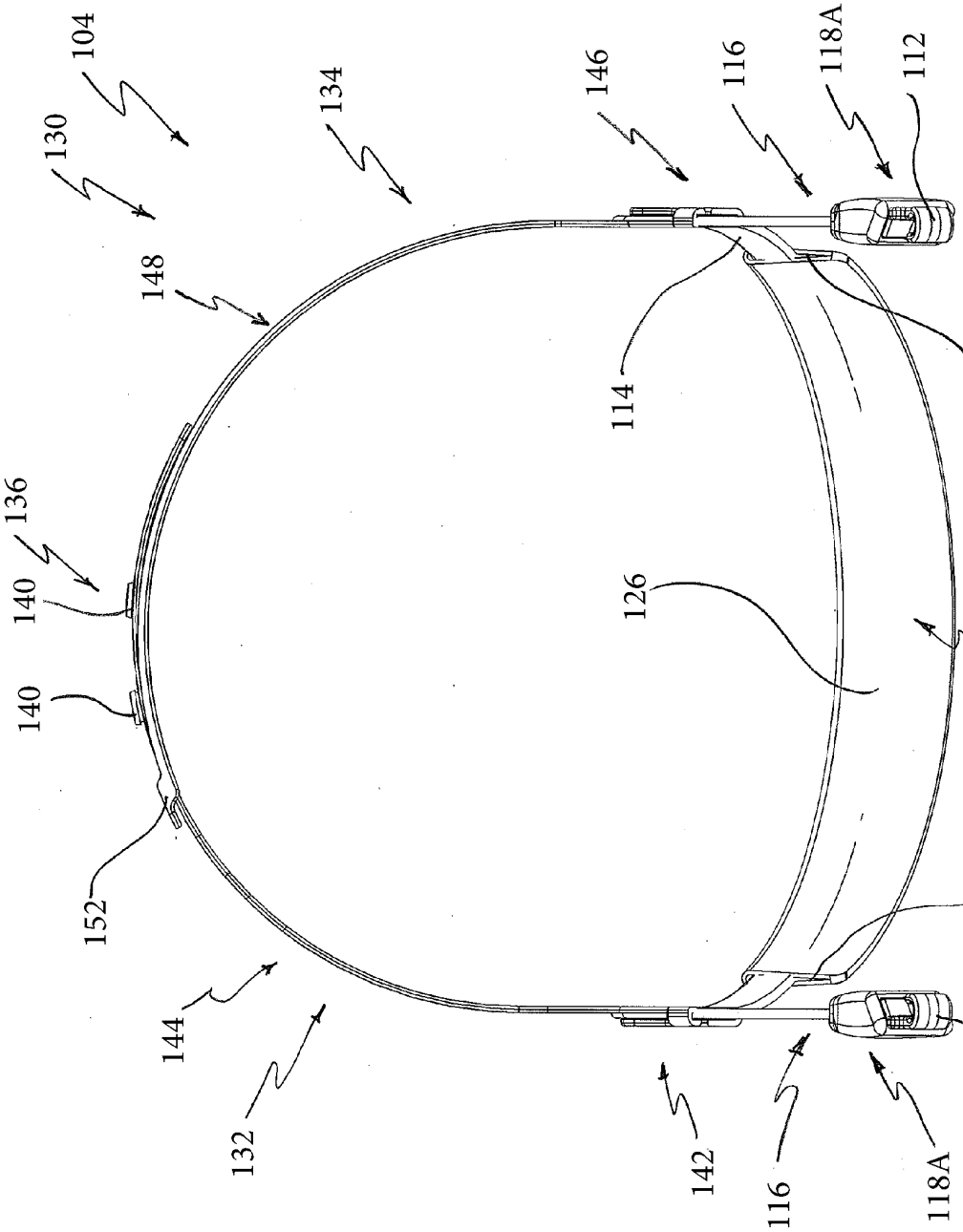
104
130
134
146
116
118A
112
148
114
124
136
140
126
122
140
152
124
144
132
142
116
118A
112

FIGURE 8

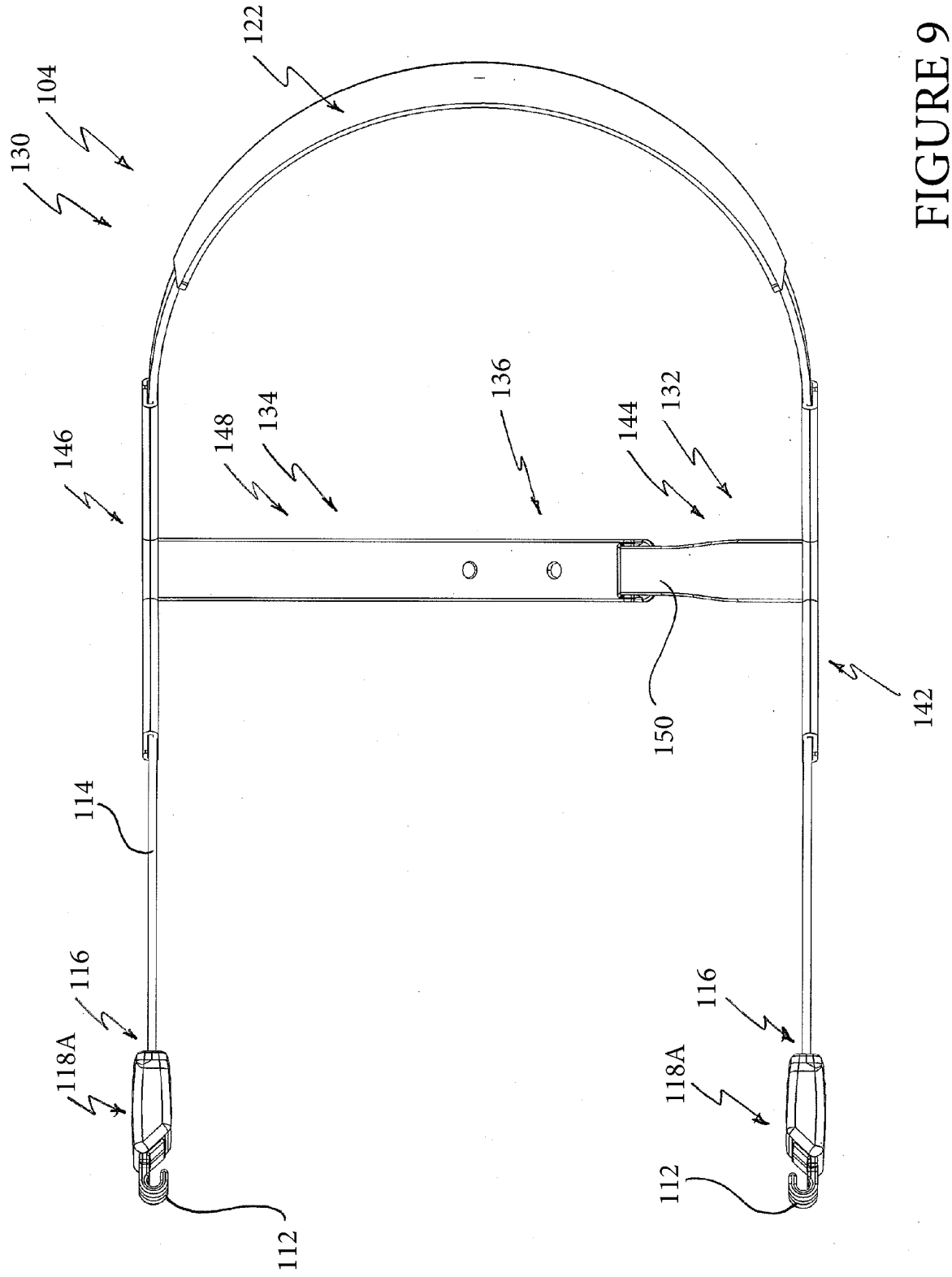
122
104
130
146
148
134
136
144
132
150
142
114
116
118A
112
116
118A
112

FIGURE 9

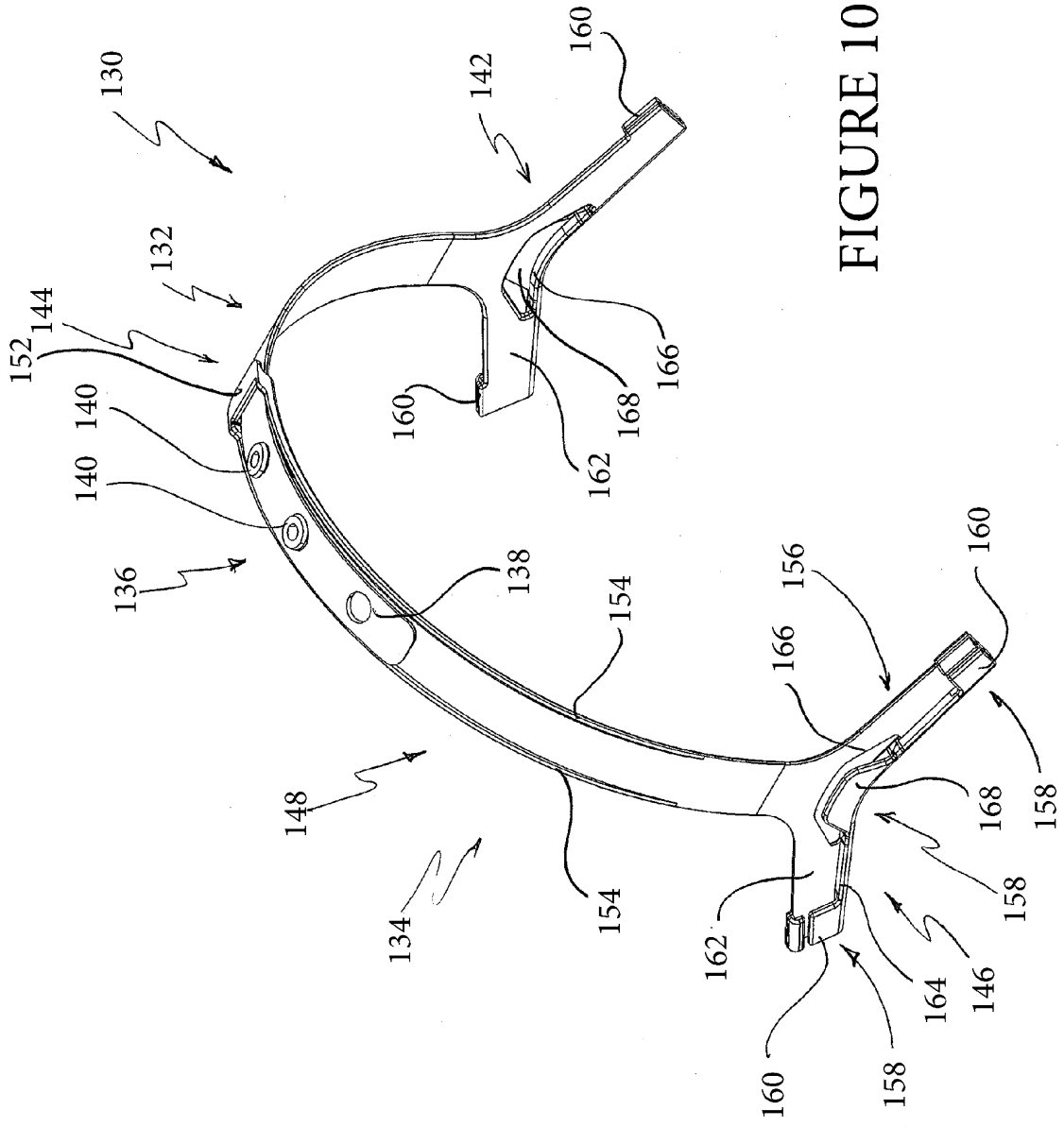
130
132
144
152
140
140
136
138
154
148
134
154
142
160
160
162
168
166
156
166
160
158
168
158
162
164
146
160
158

FIGURE 10

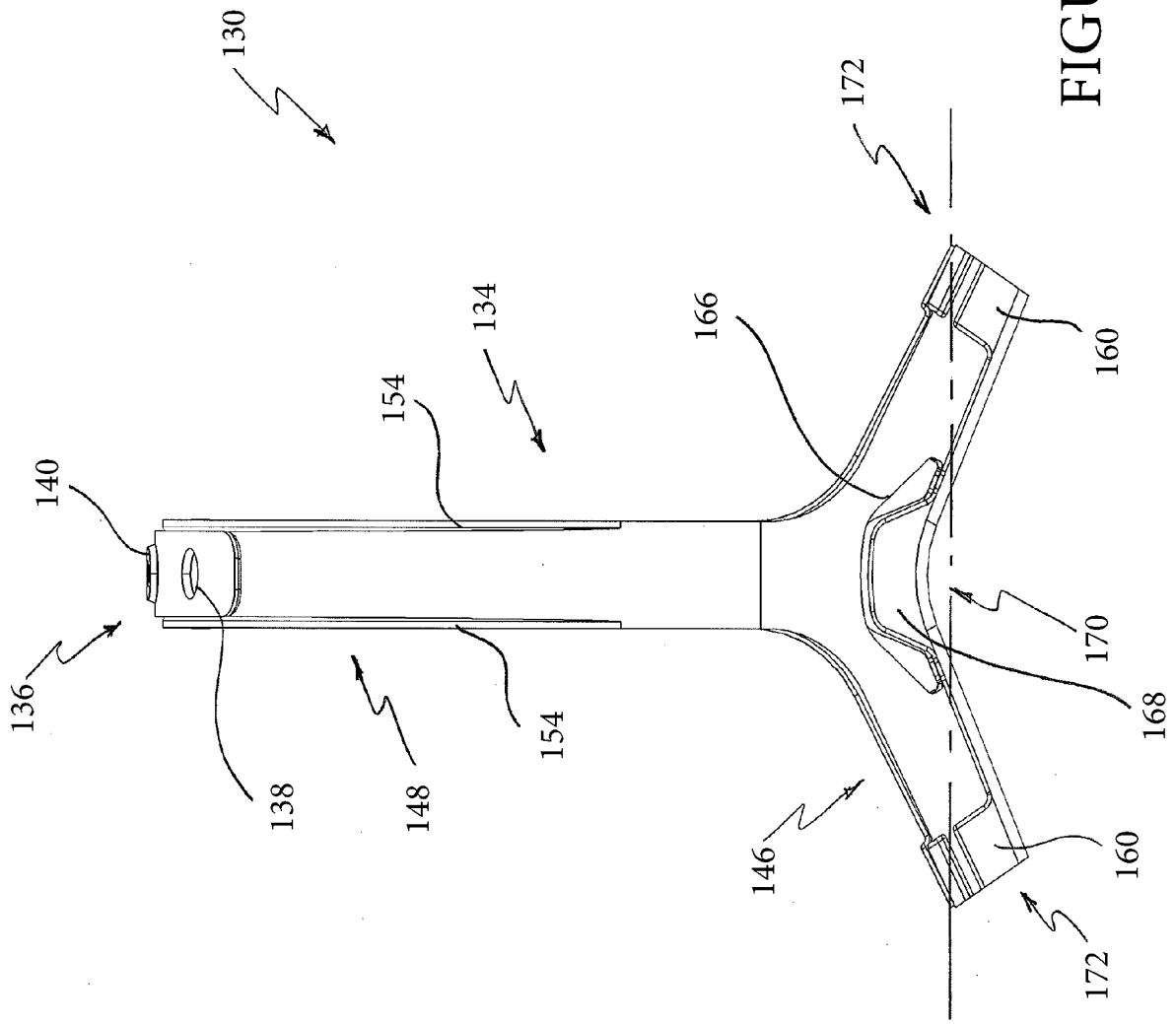

FIGURE 11

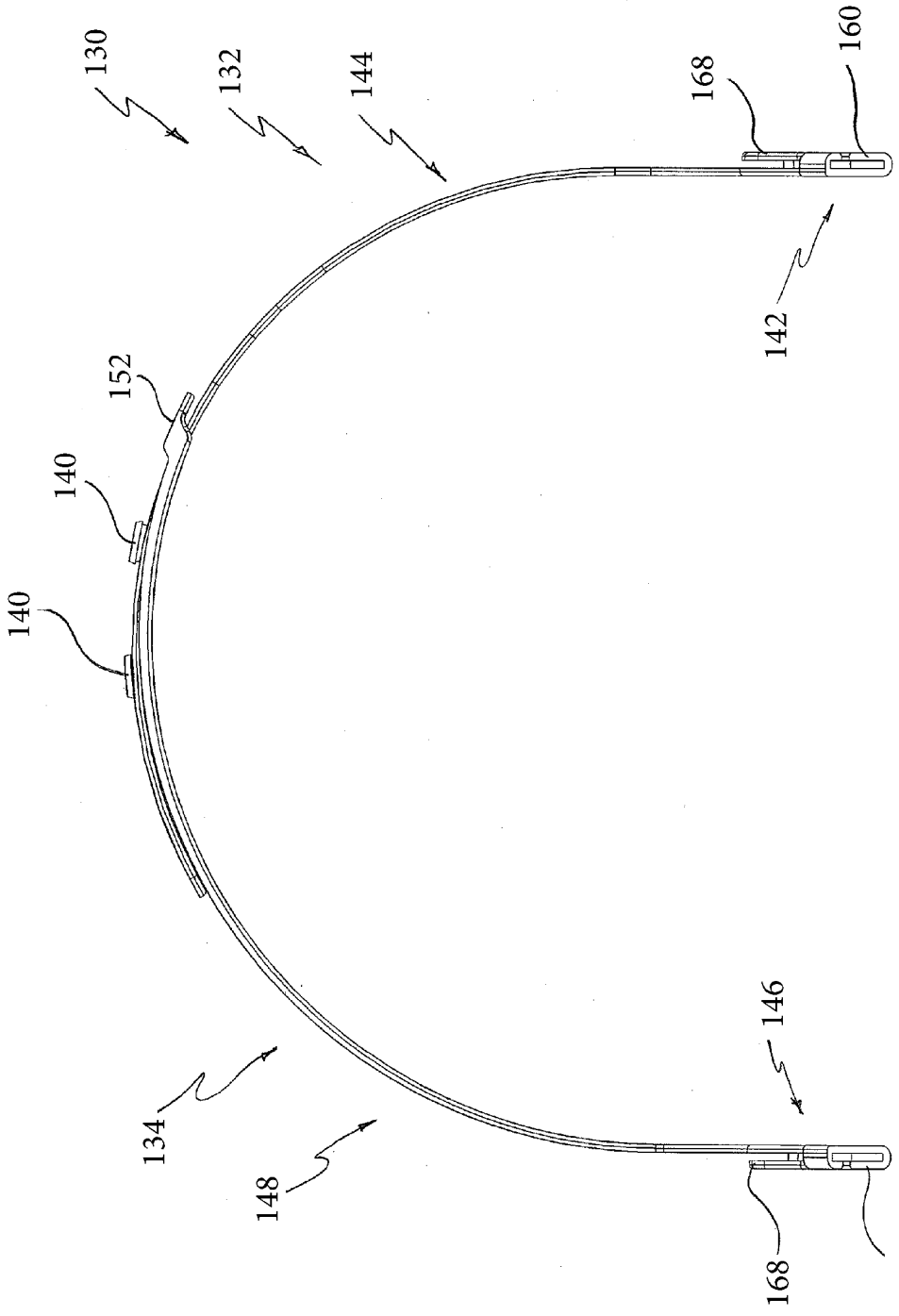

FIGURE 12

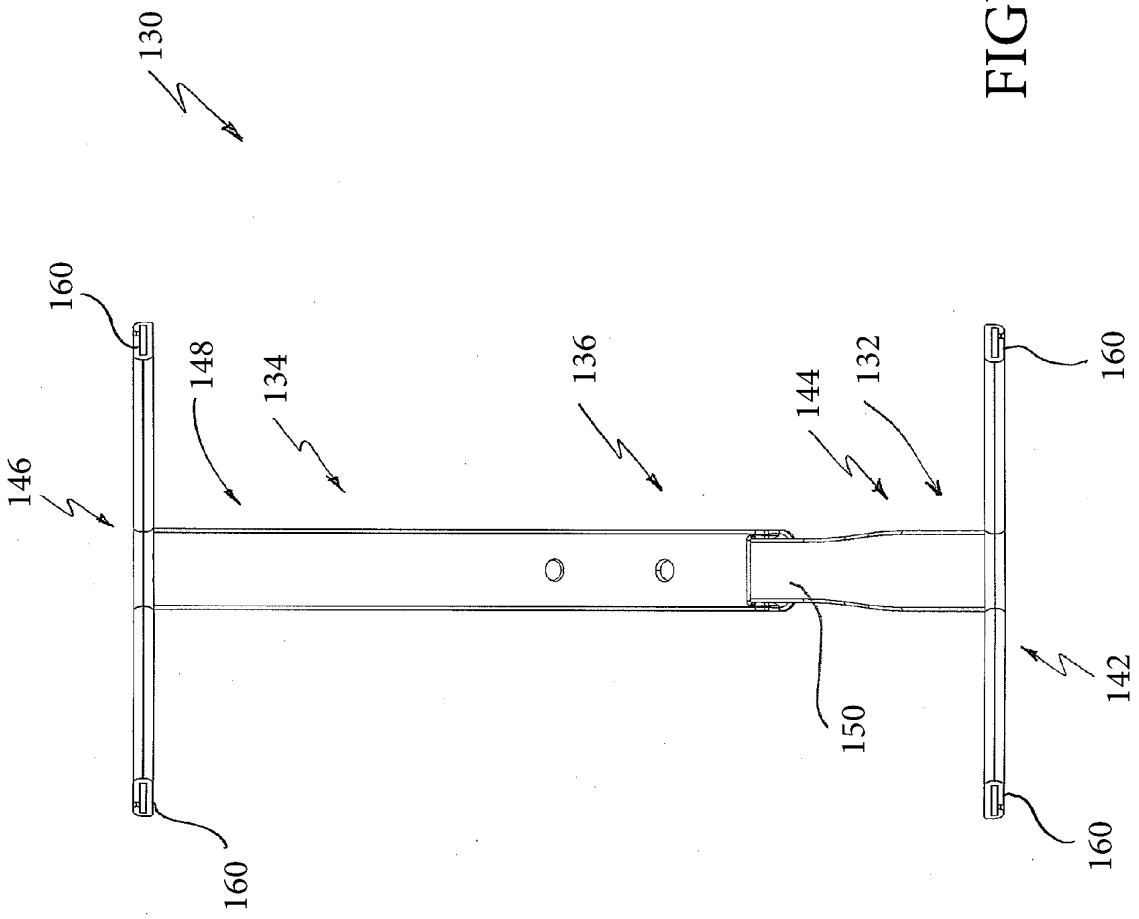

FIGURE 13

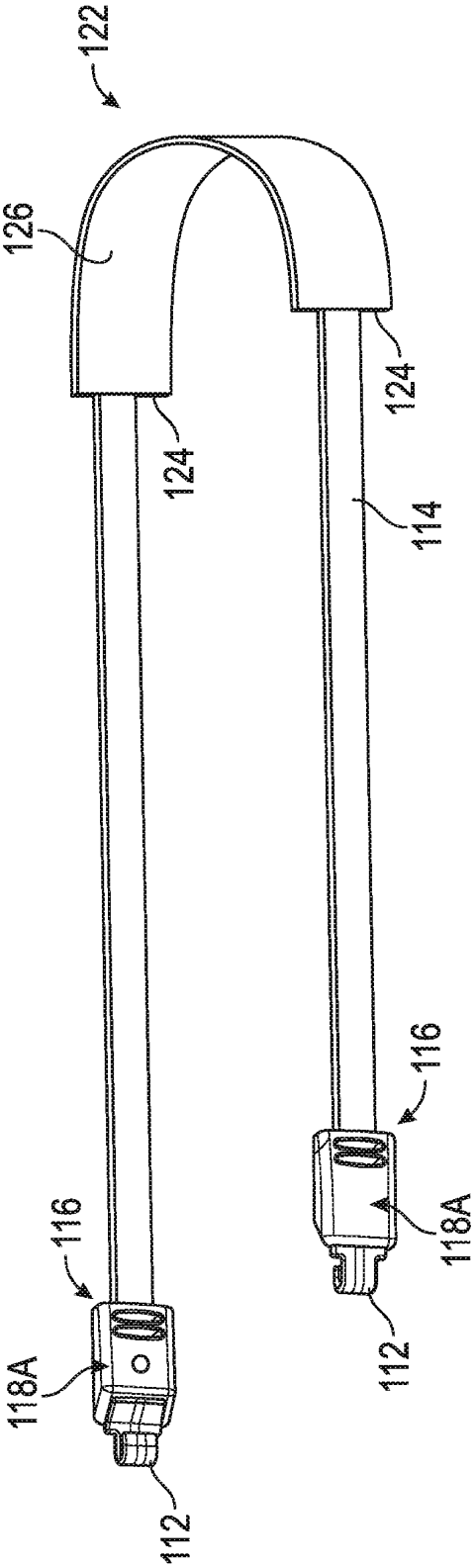

FIGURE 14

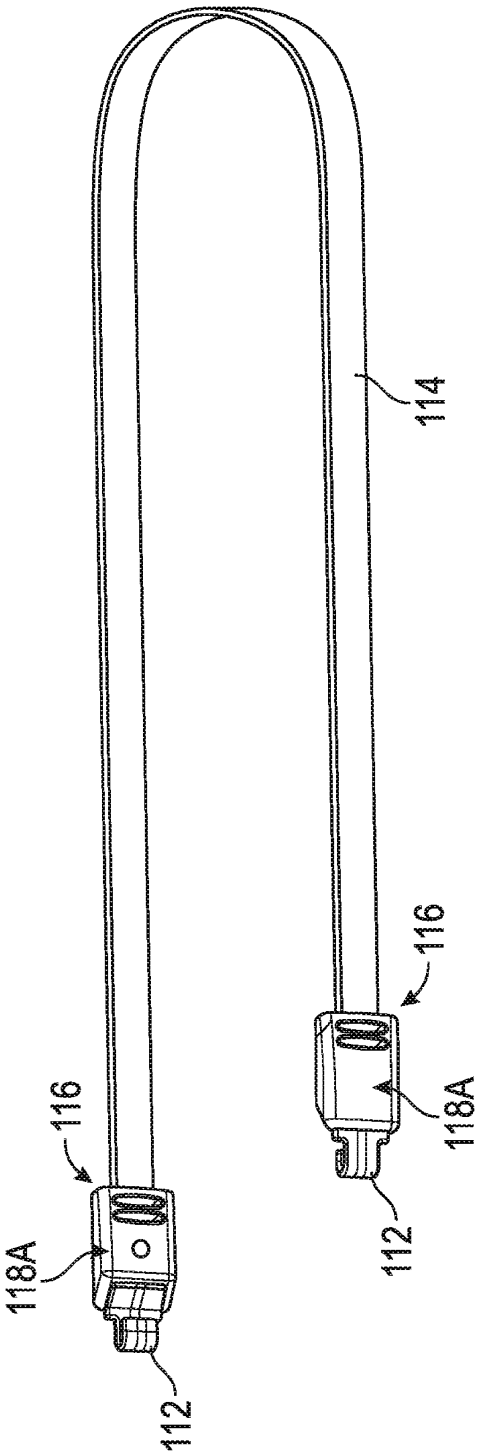

FIGURE 15

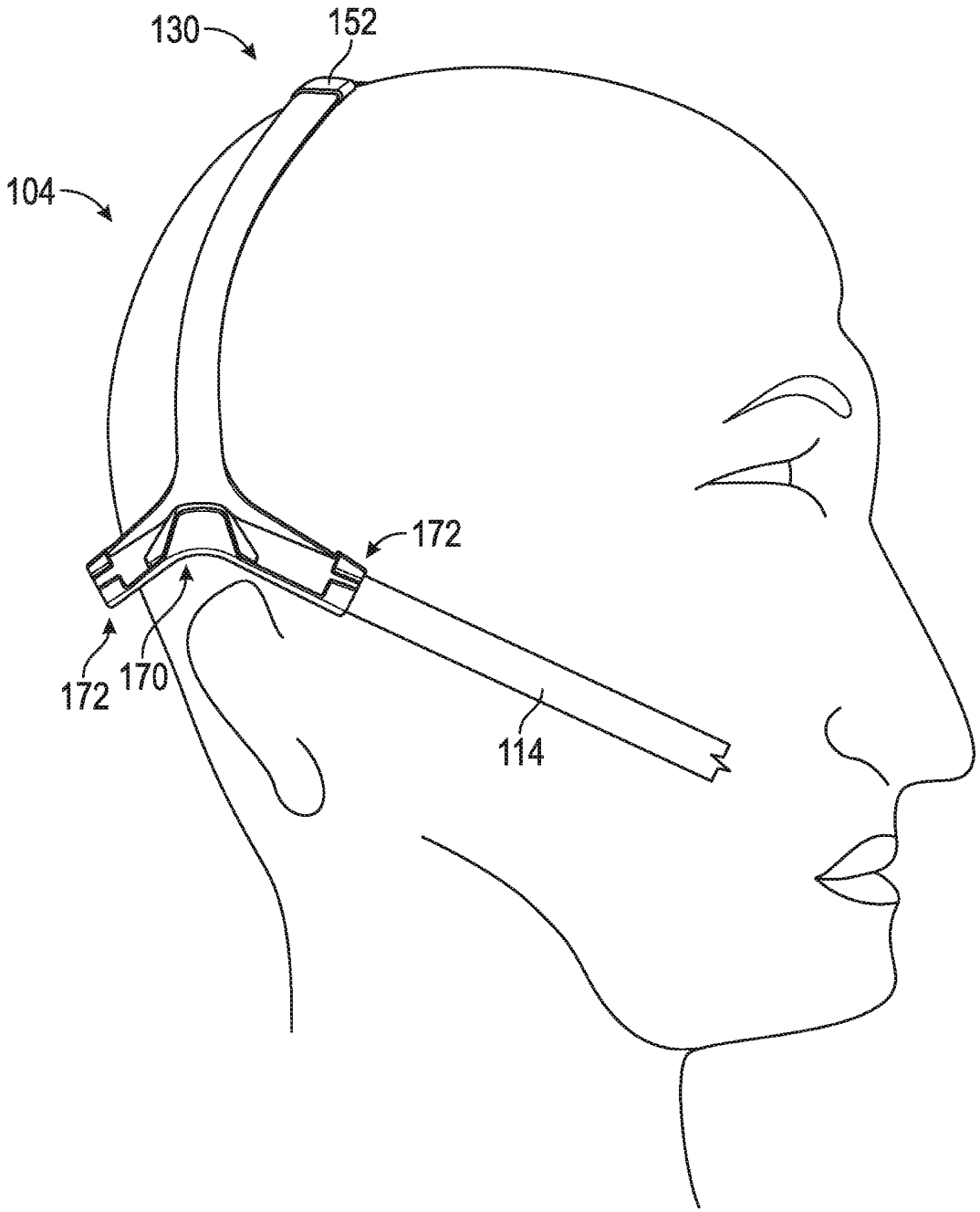

FIGURE 16

FIGURE 17

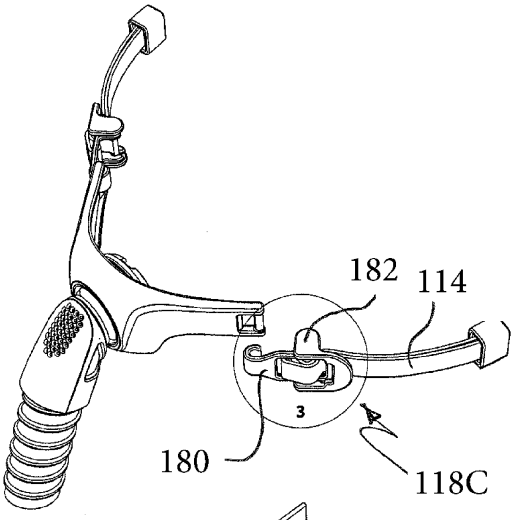

FIGURE 18

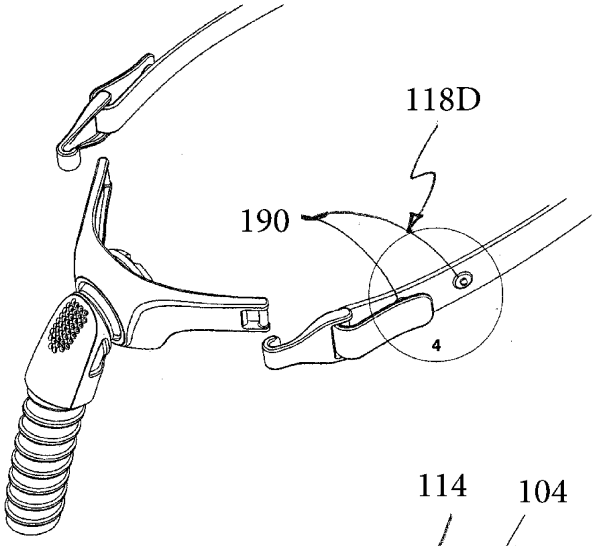

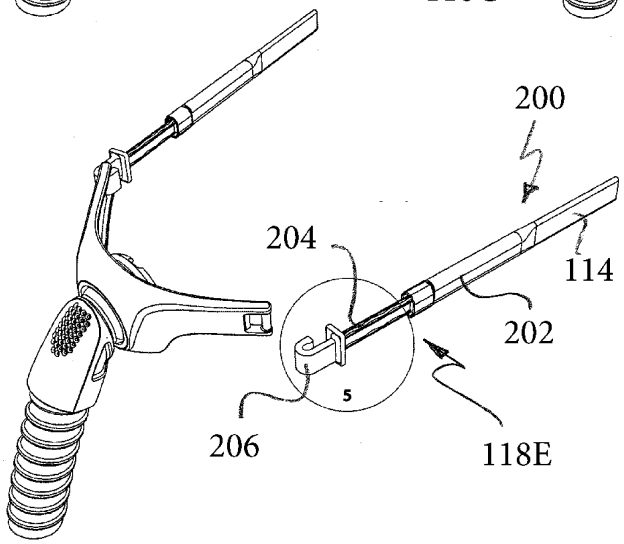

FIGURE 19

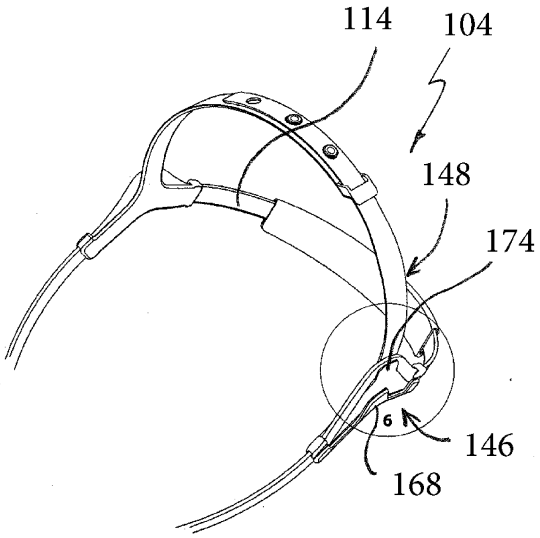

FIGURE 20

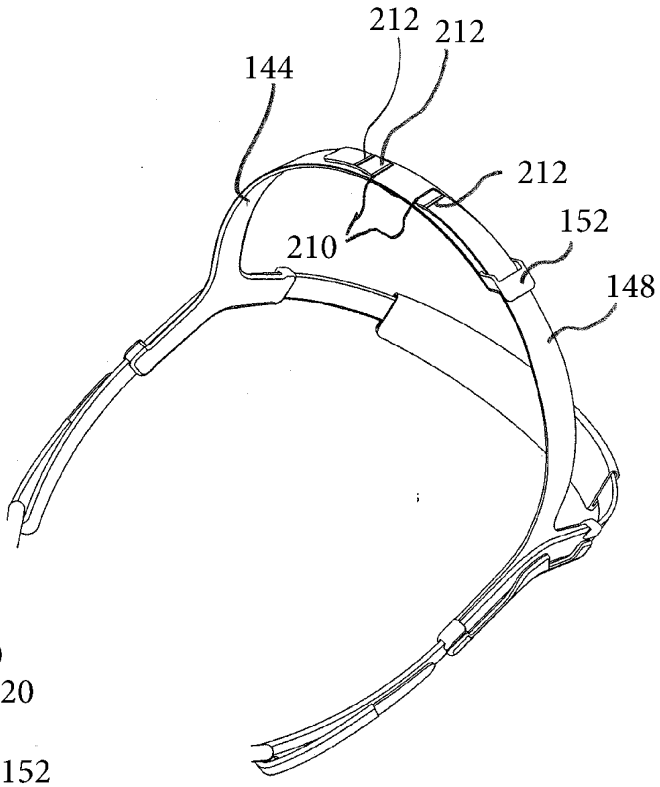

FIGURE 21

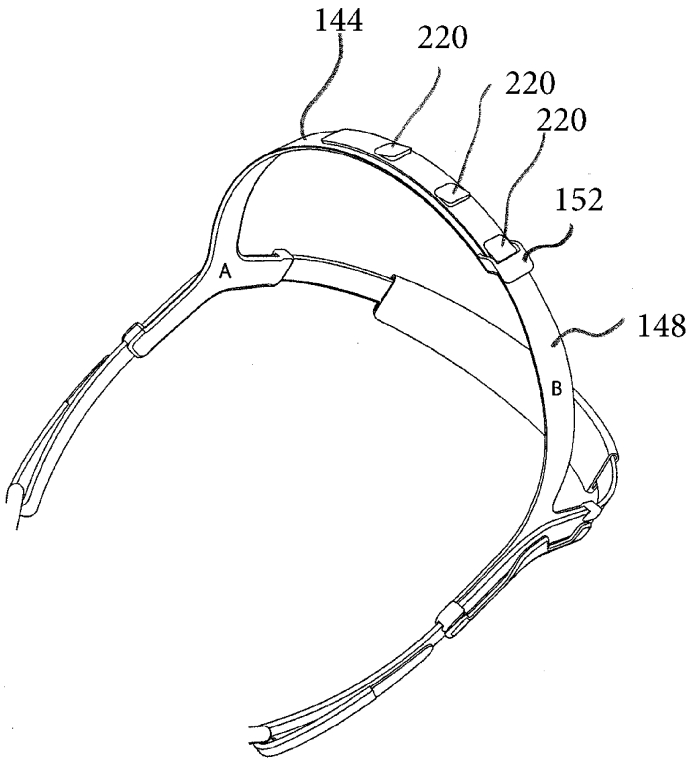

FIGURE 22

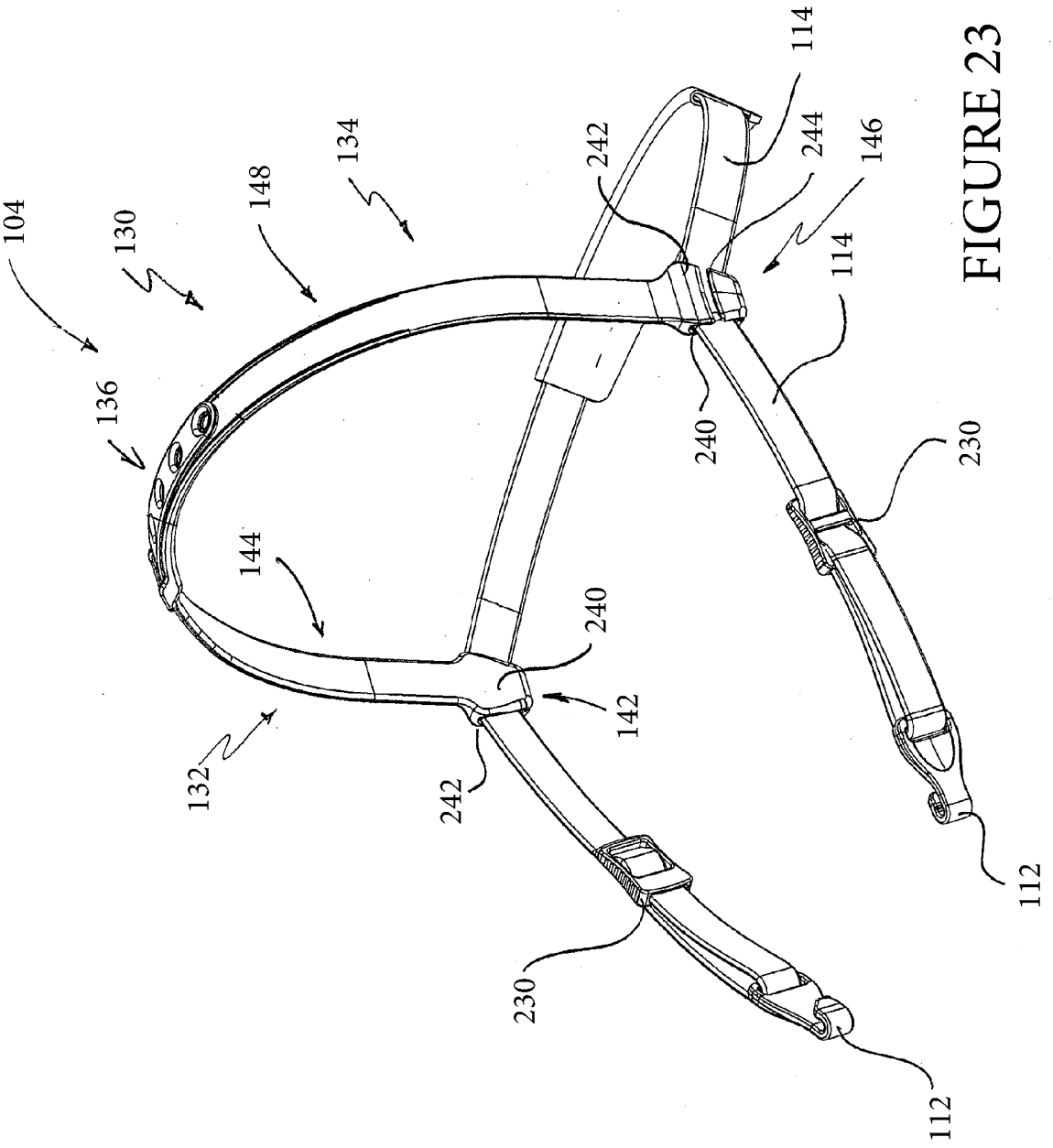
104
130
148
134
242
114
244
146
114
136
240
230
144
240
142
132
242
230
112
112

FIGURE 23

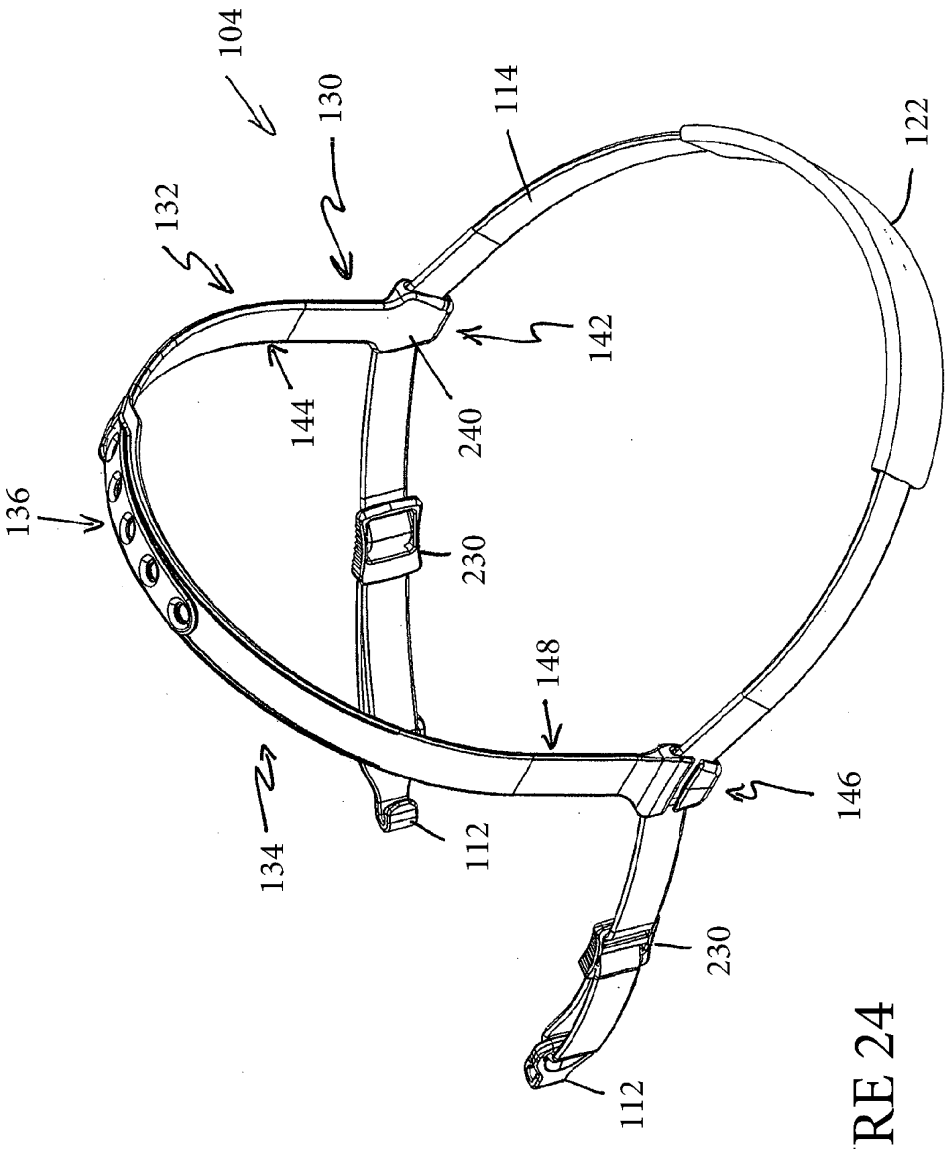

FIGURE 24

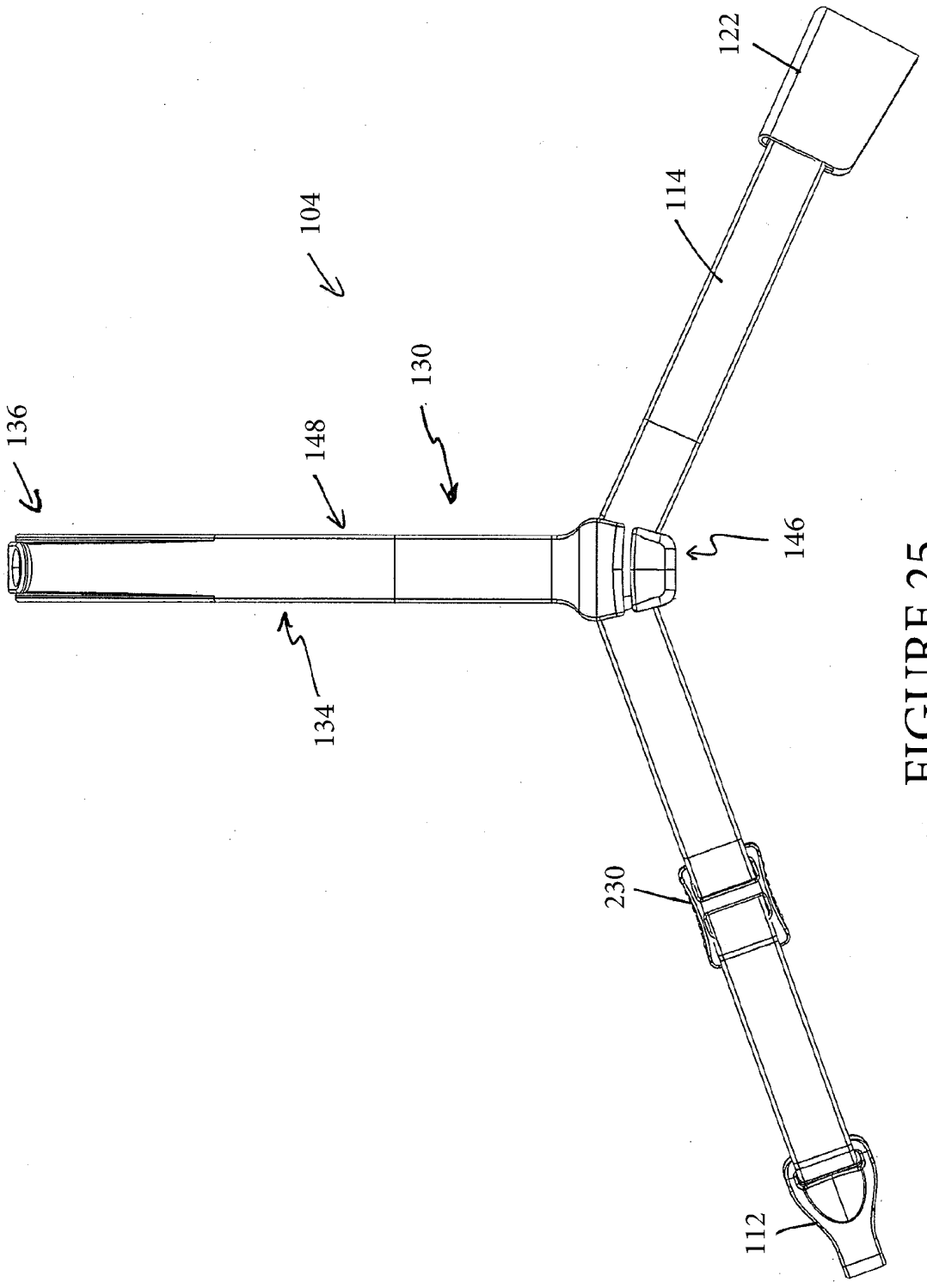

FIGURE 25

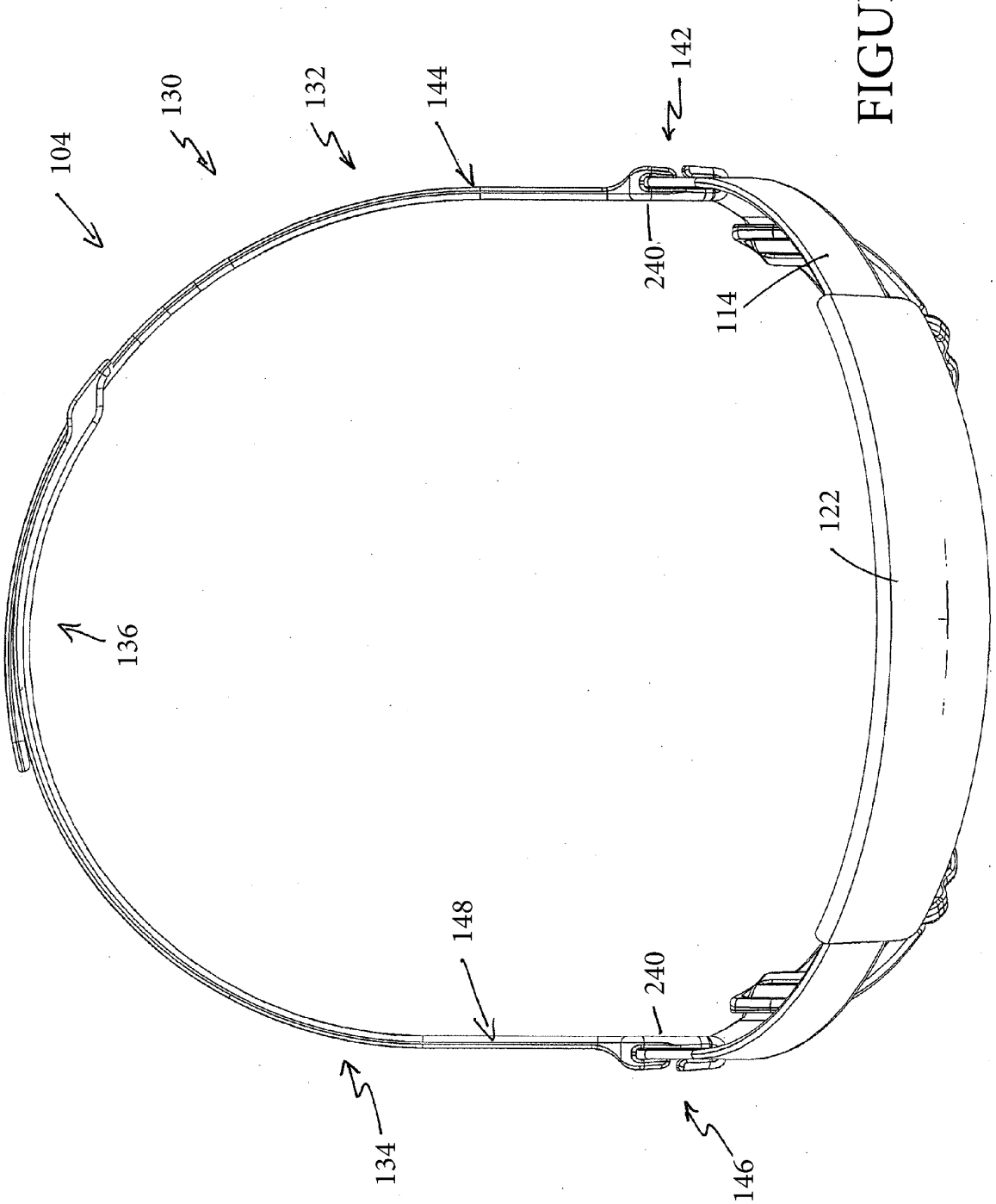

FIGURE 26

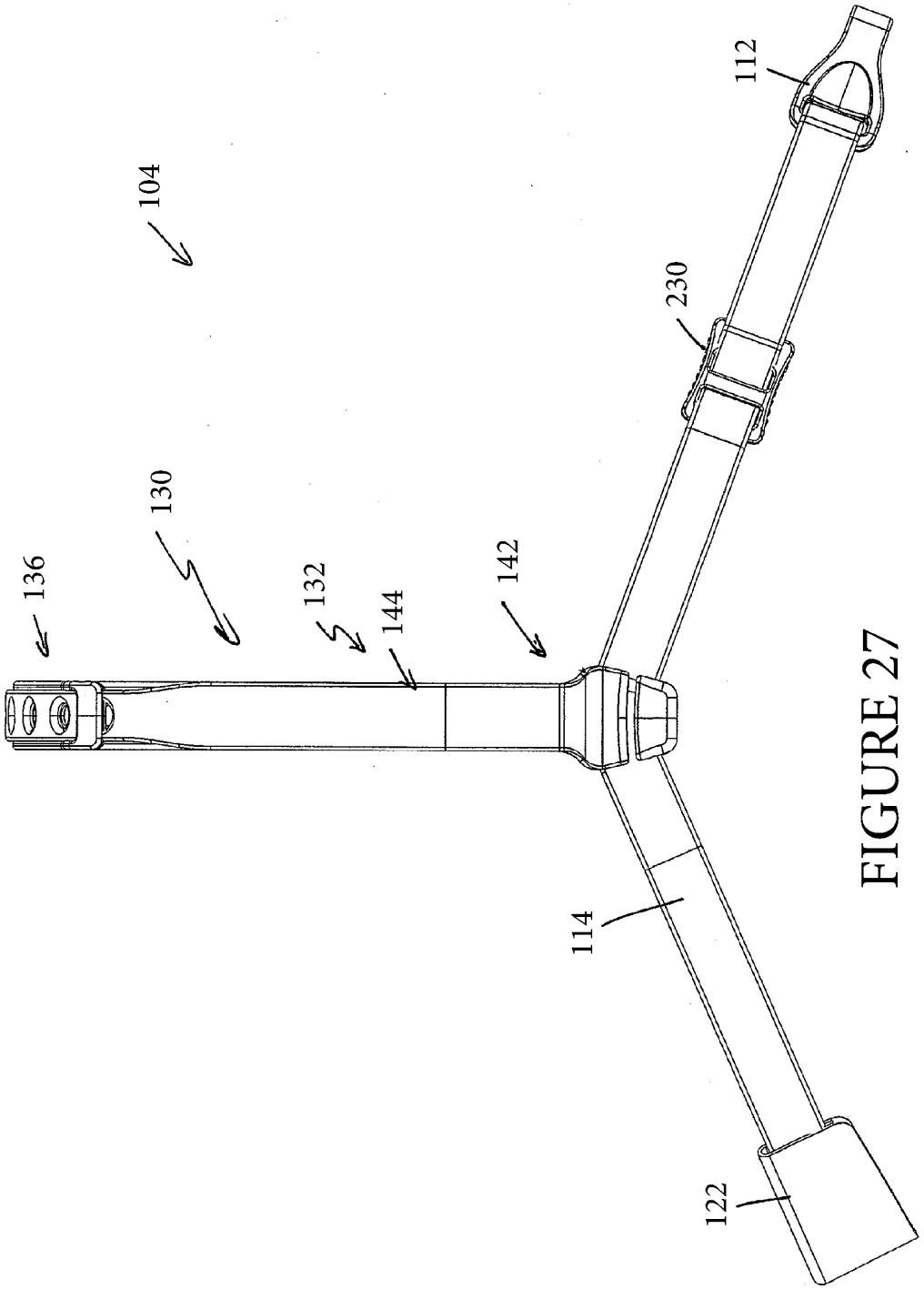

FIGURE 27

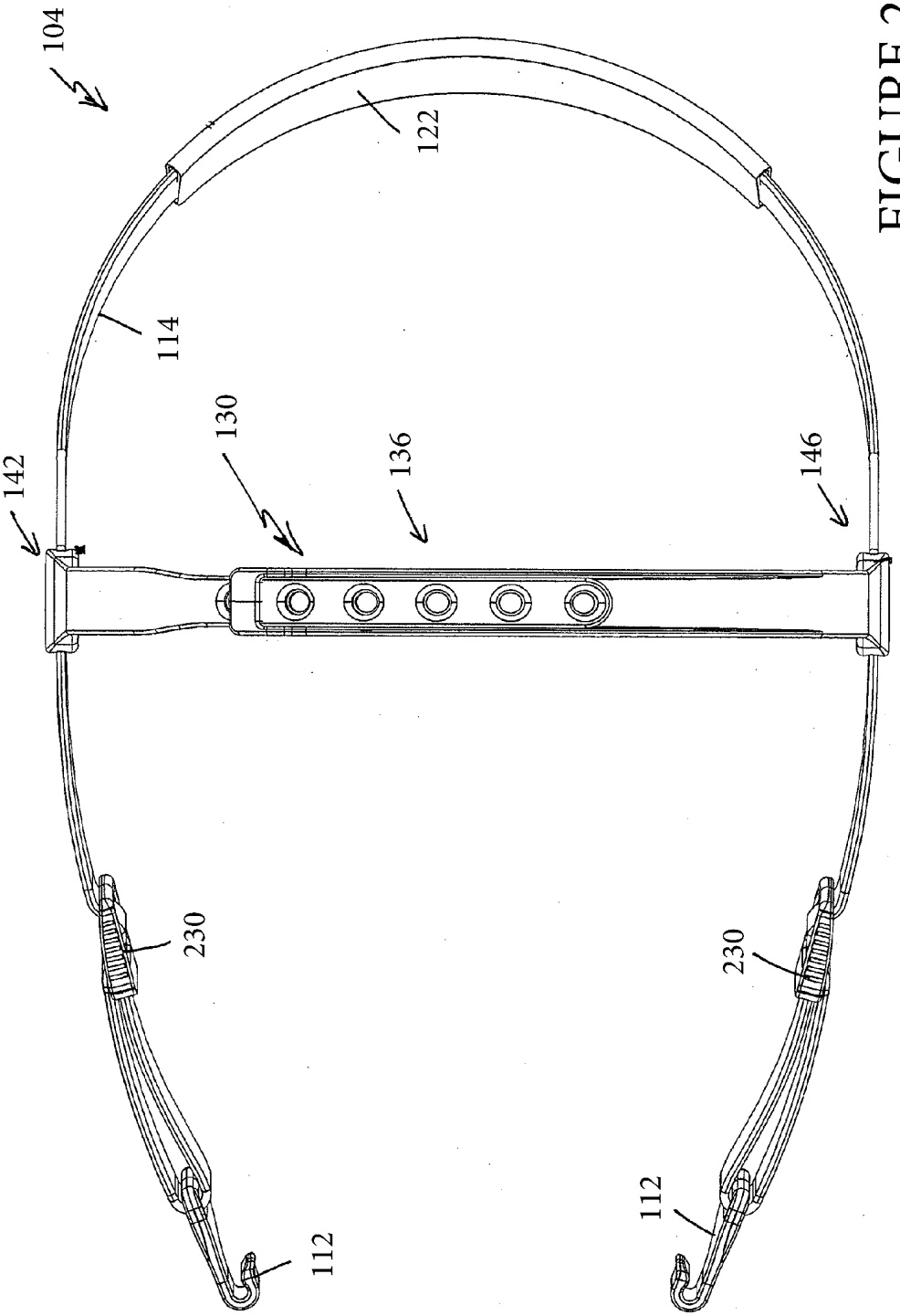

FIGURE 28

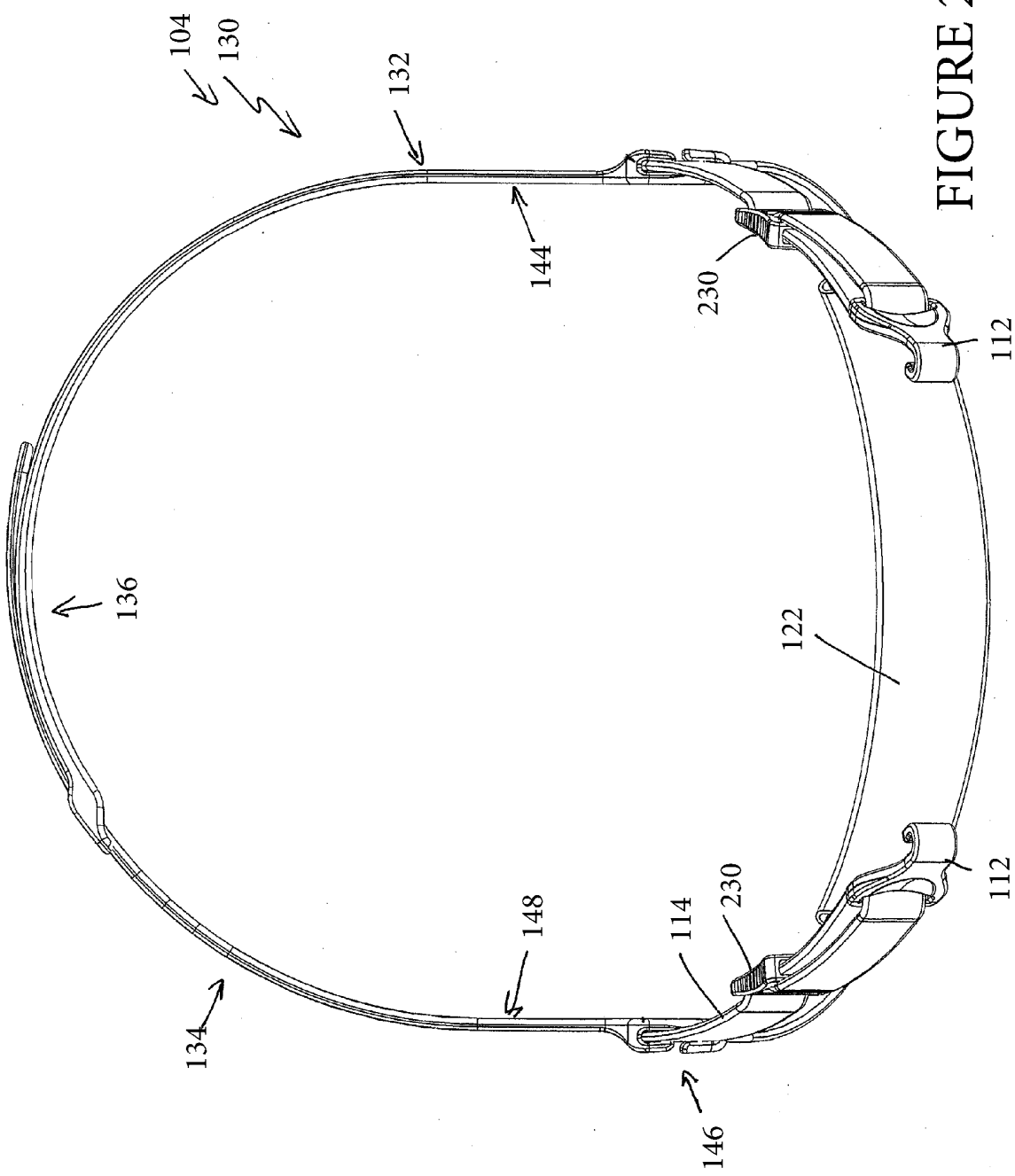

FIGURE 29

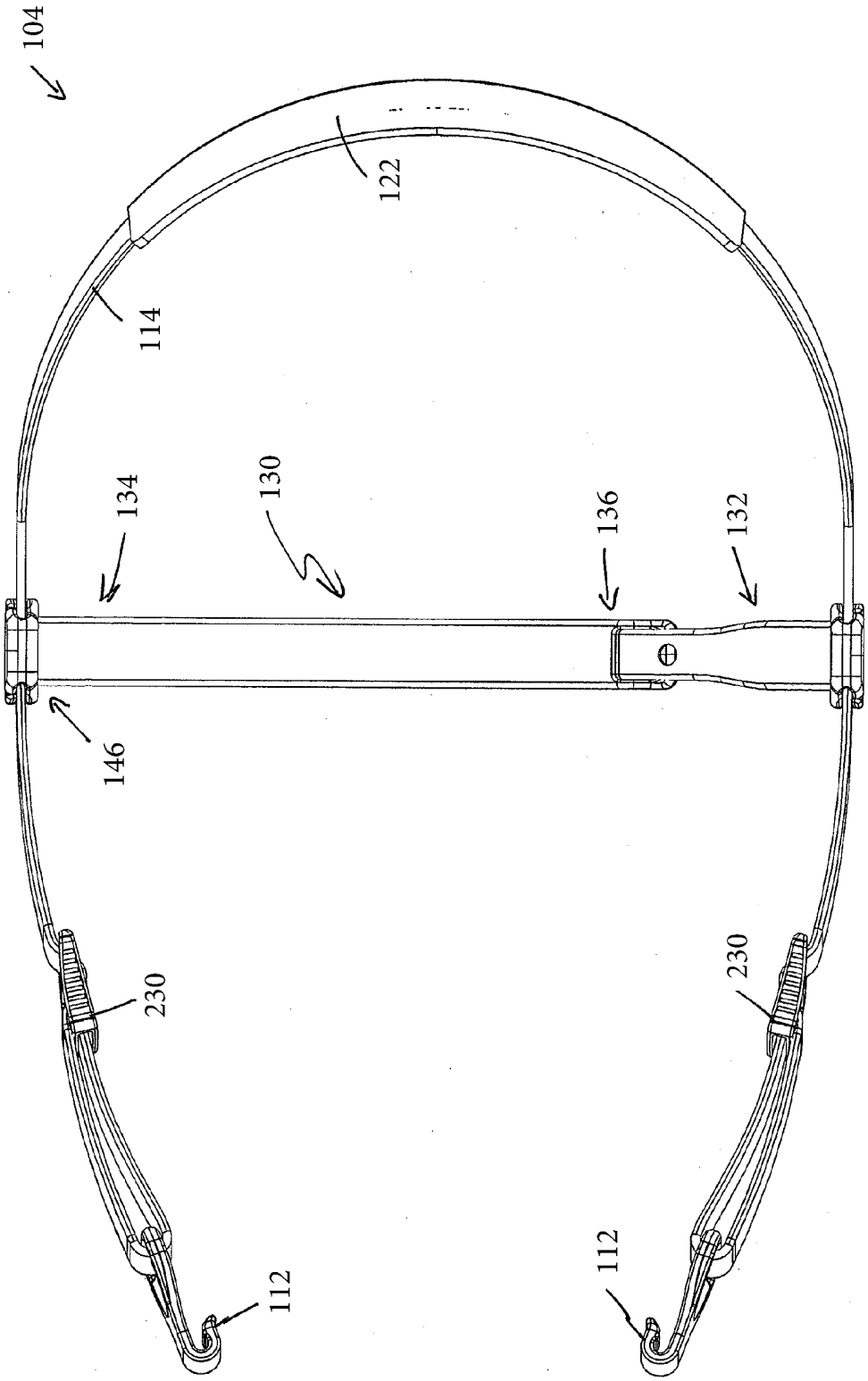

FIGURE 30

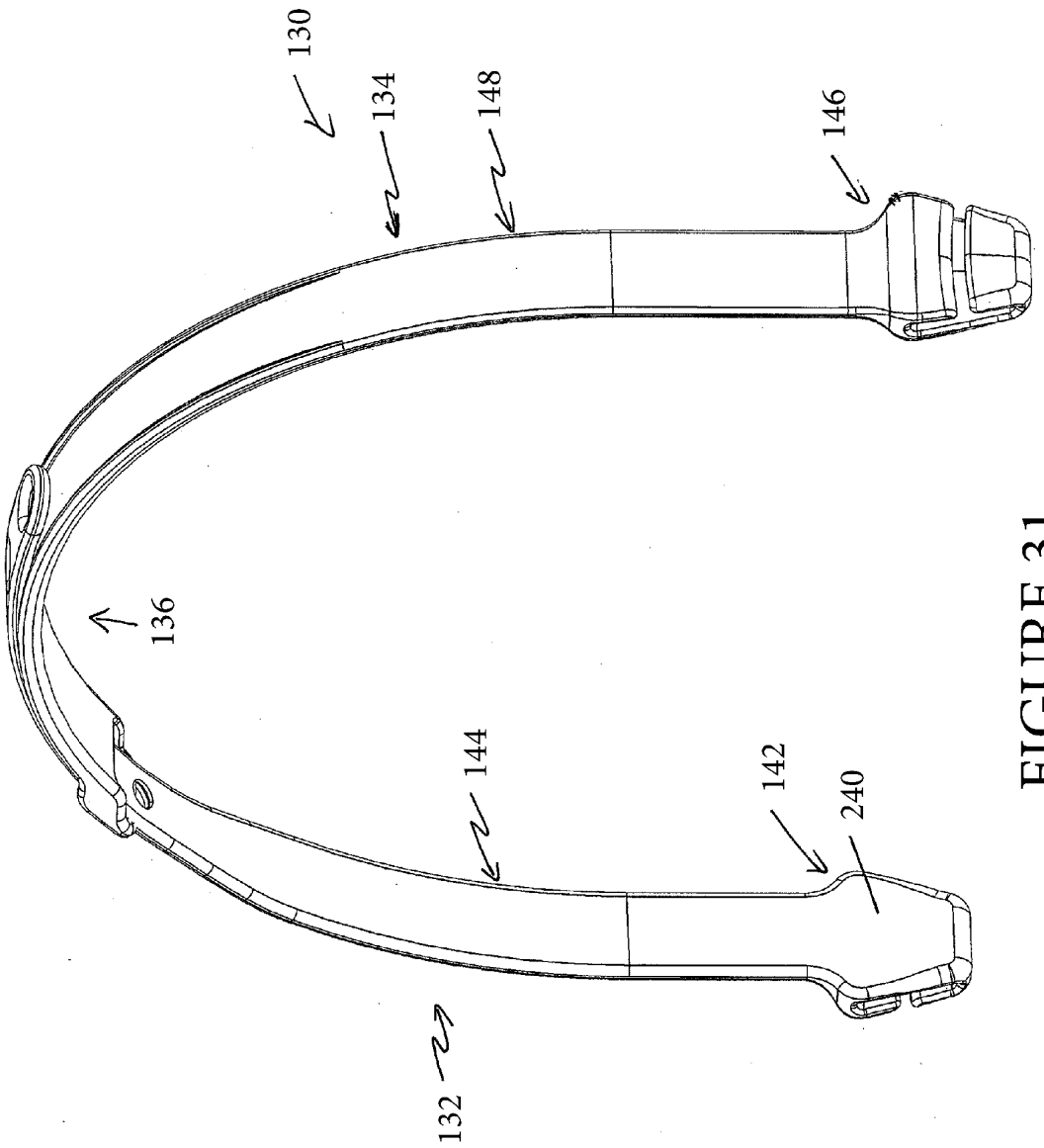

FIGURE 31

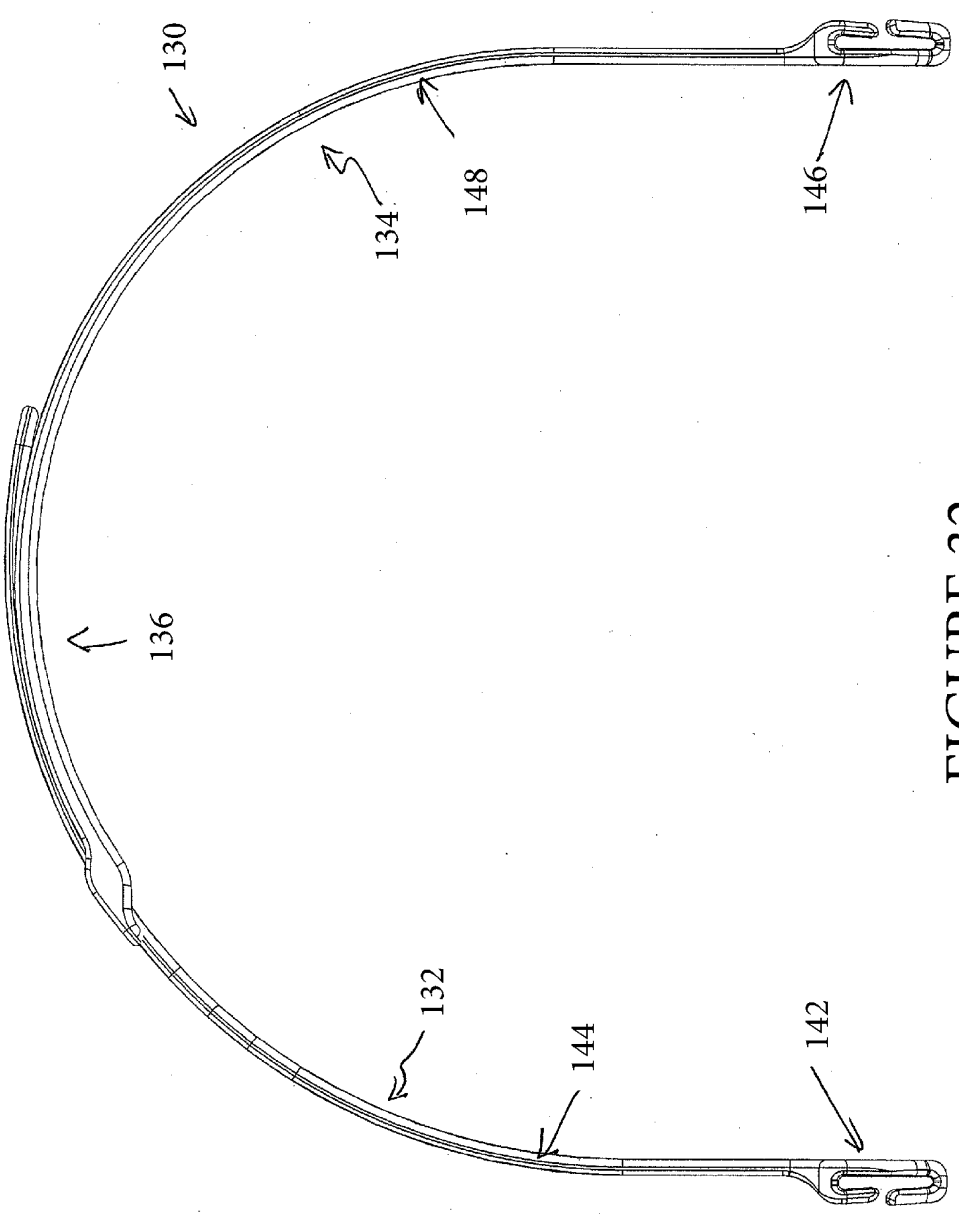

FIGURE 32

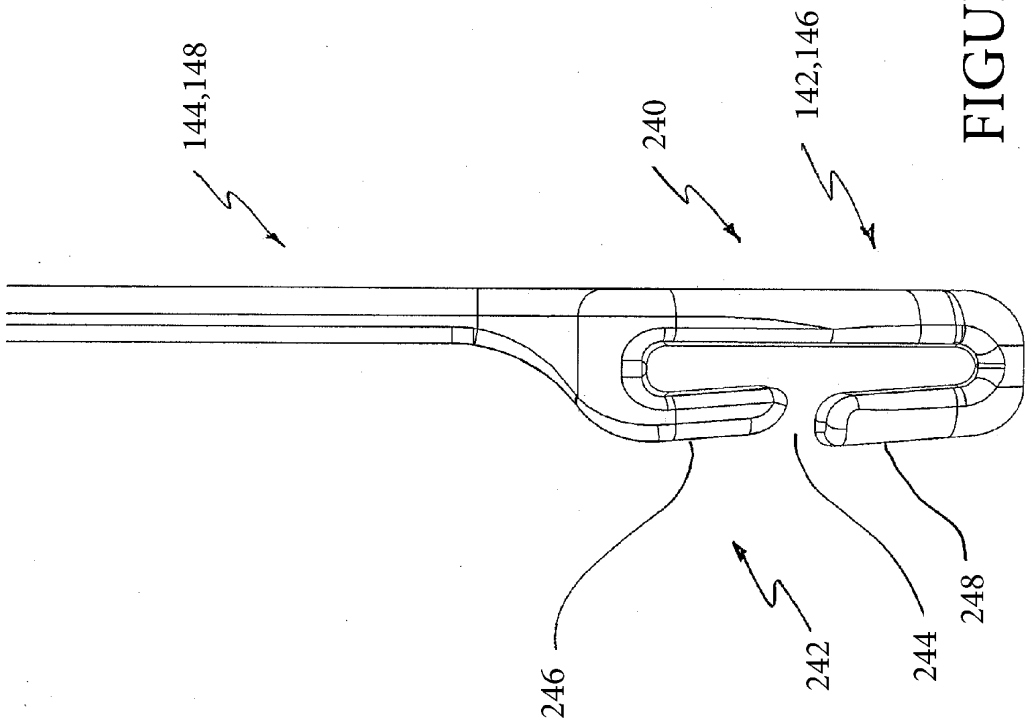

FIGURE 33

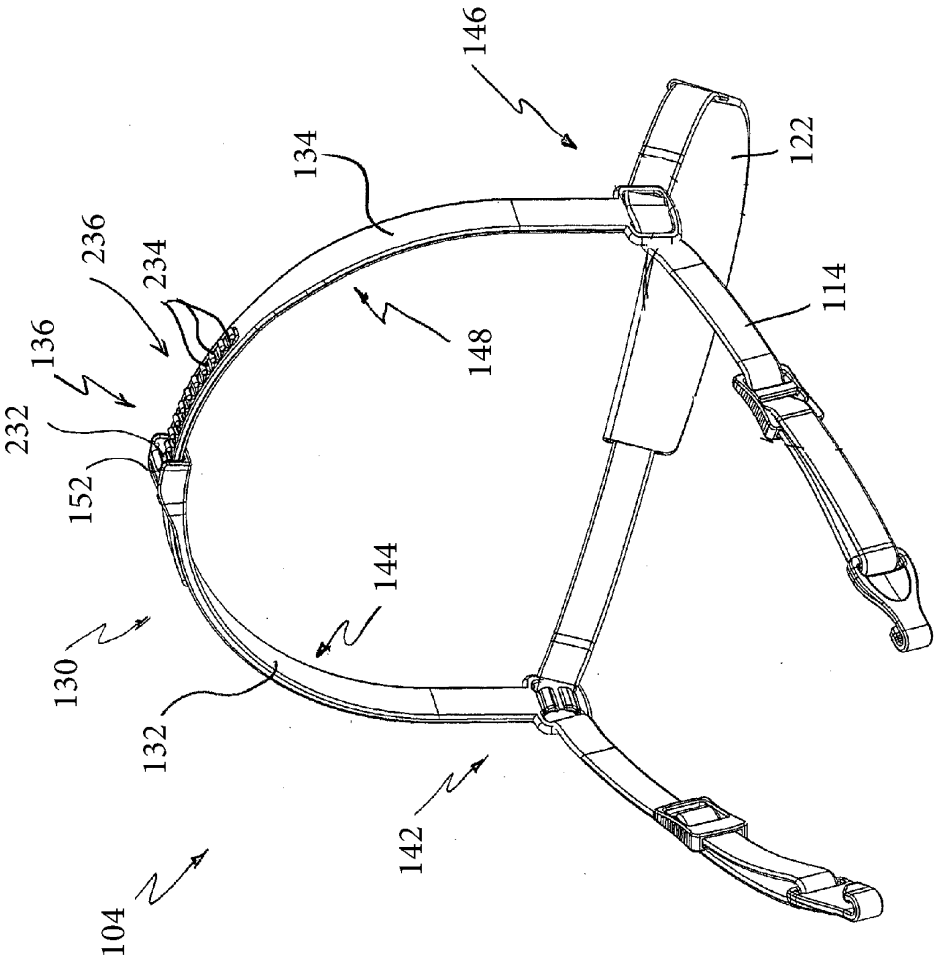

FIGURE 34

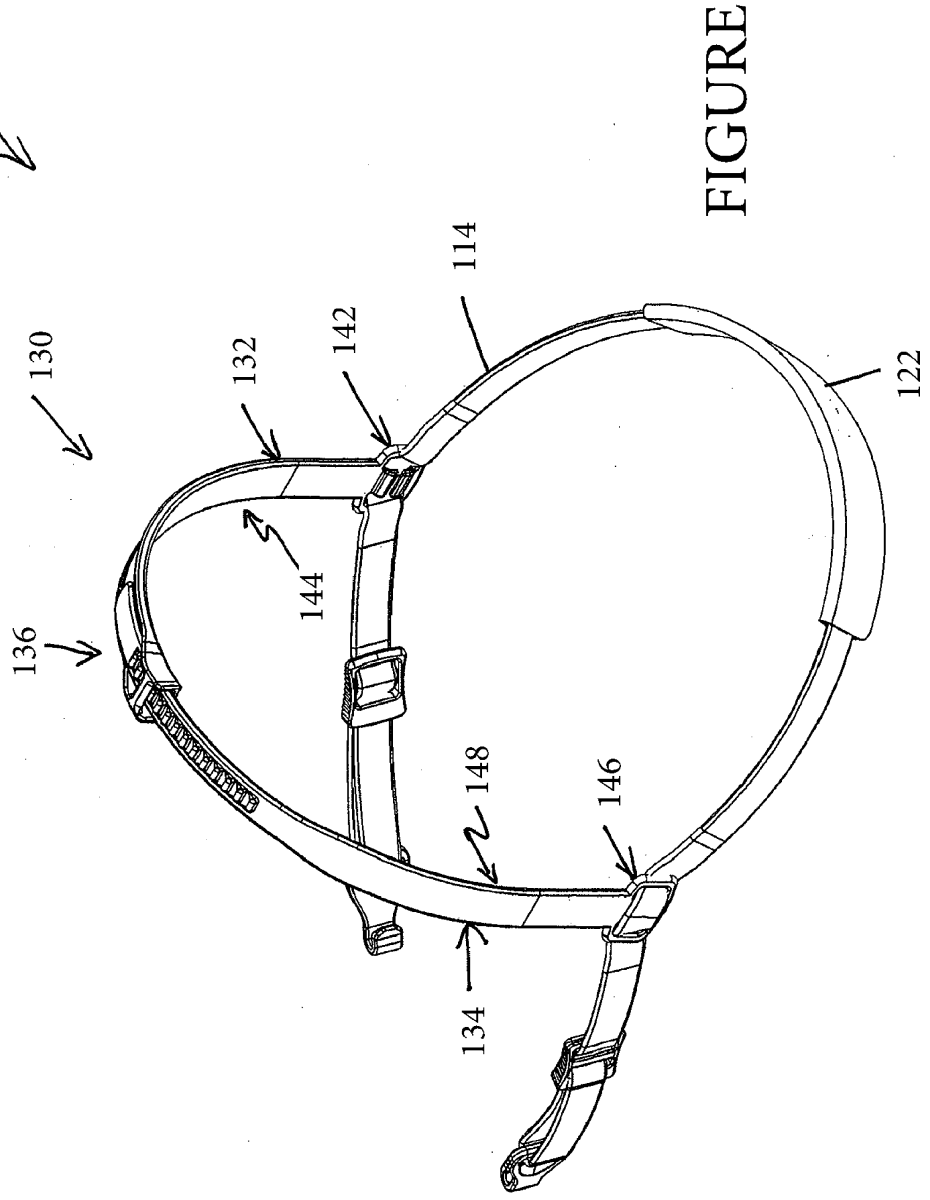

FIGURE 35

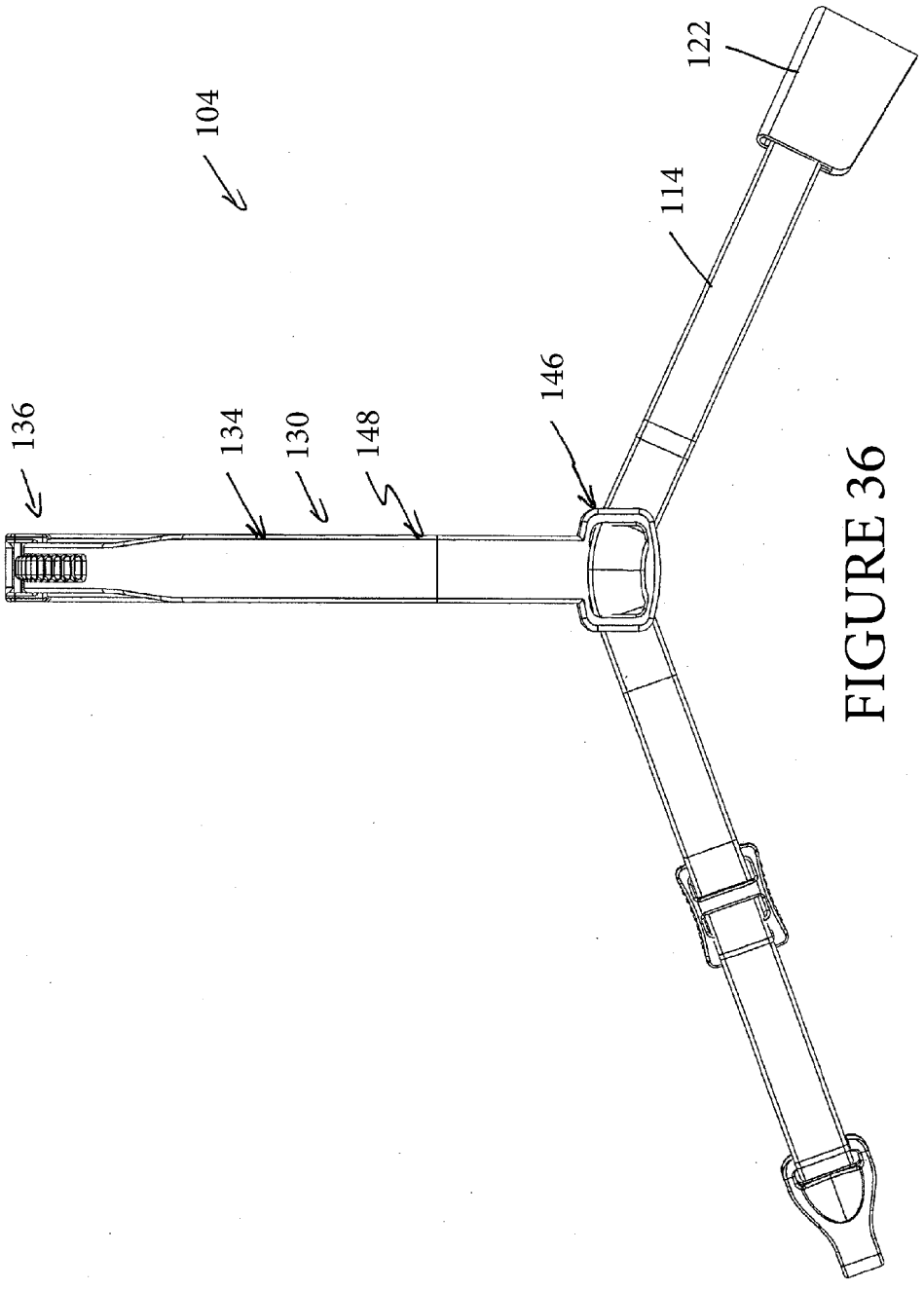

FIGURE 36

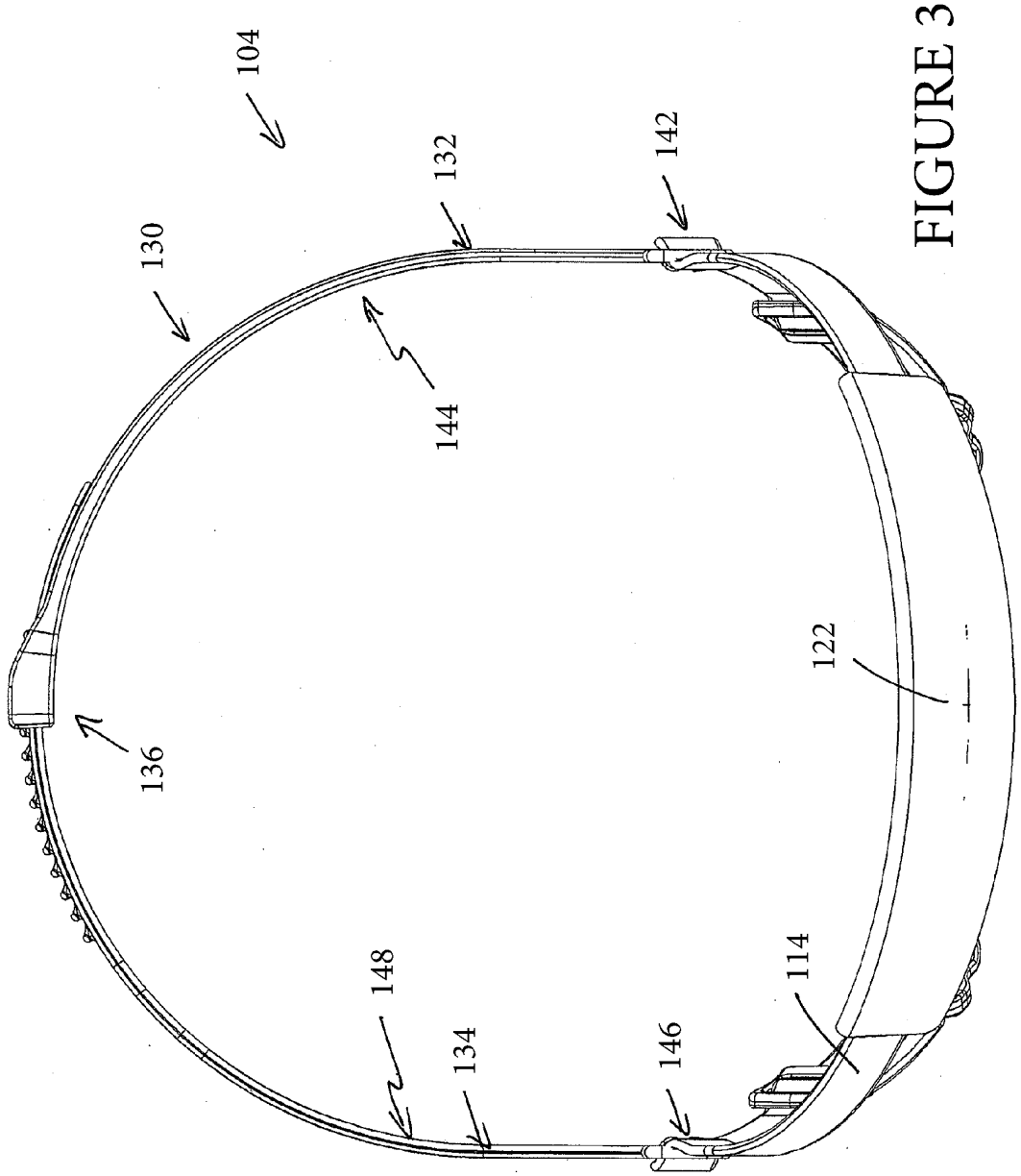

FIGURE 37

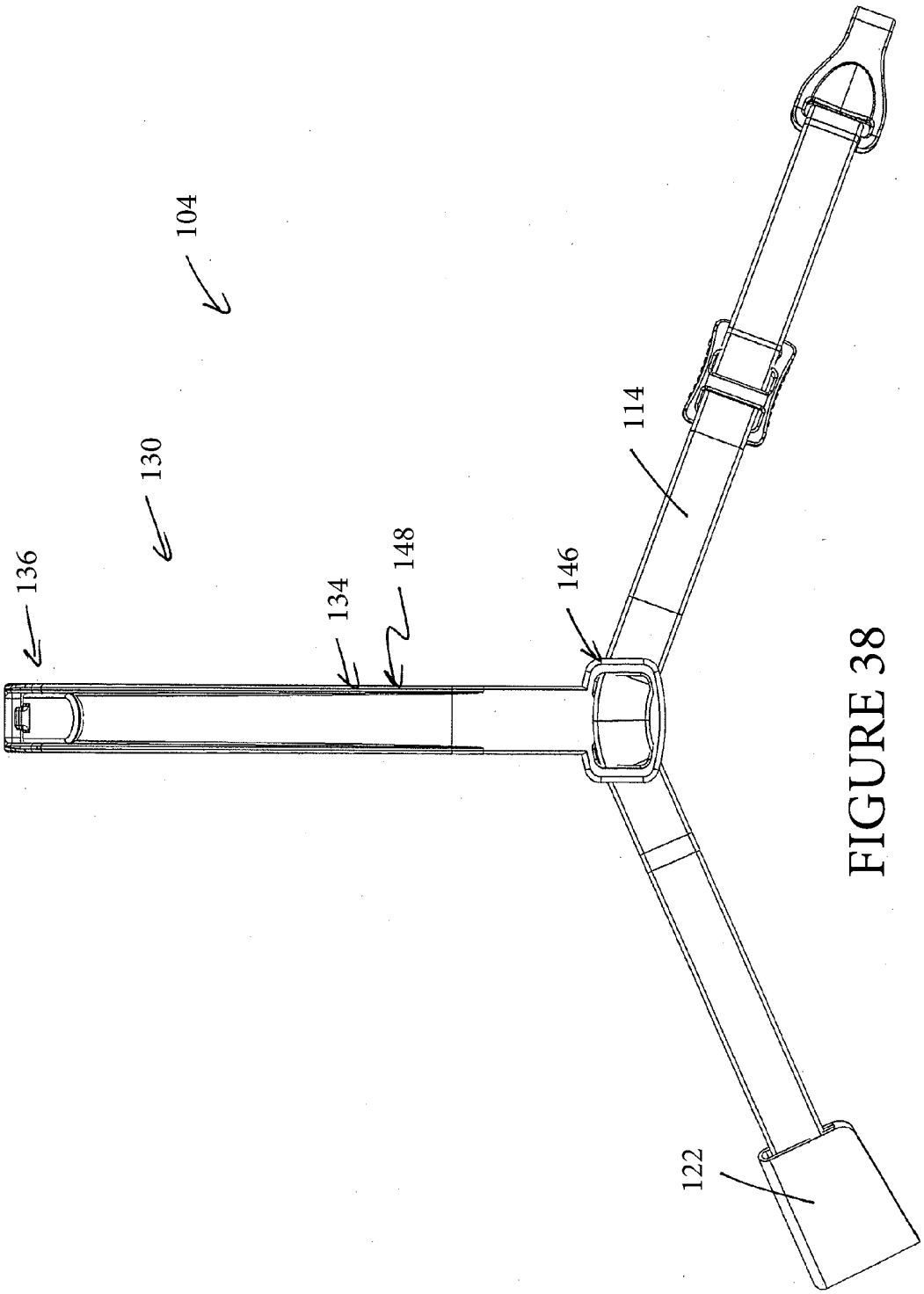

FIGURE 38

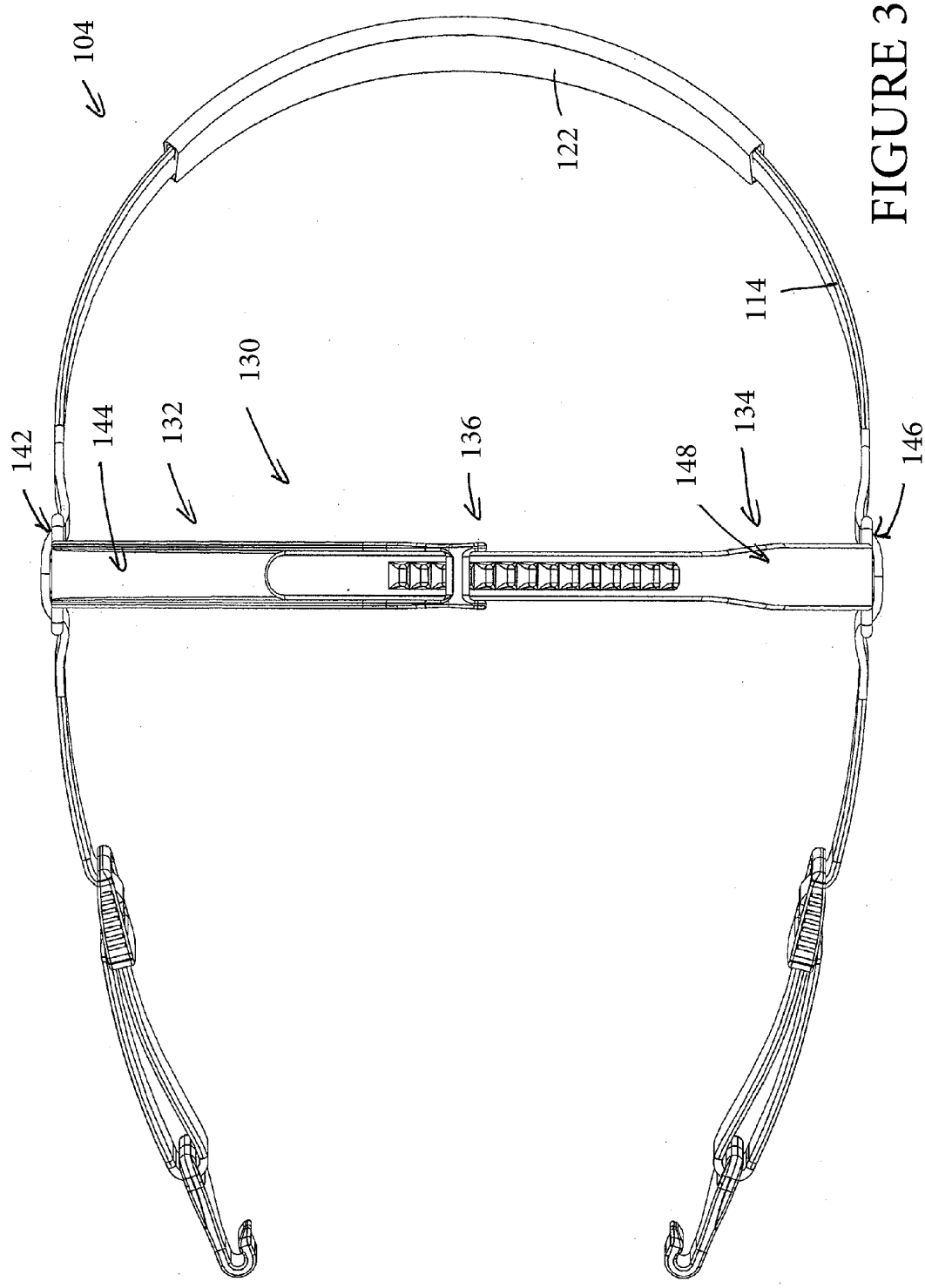

FIGURE 39

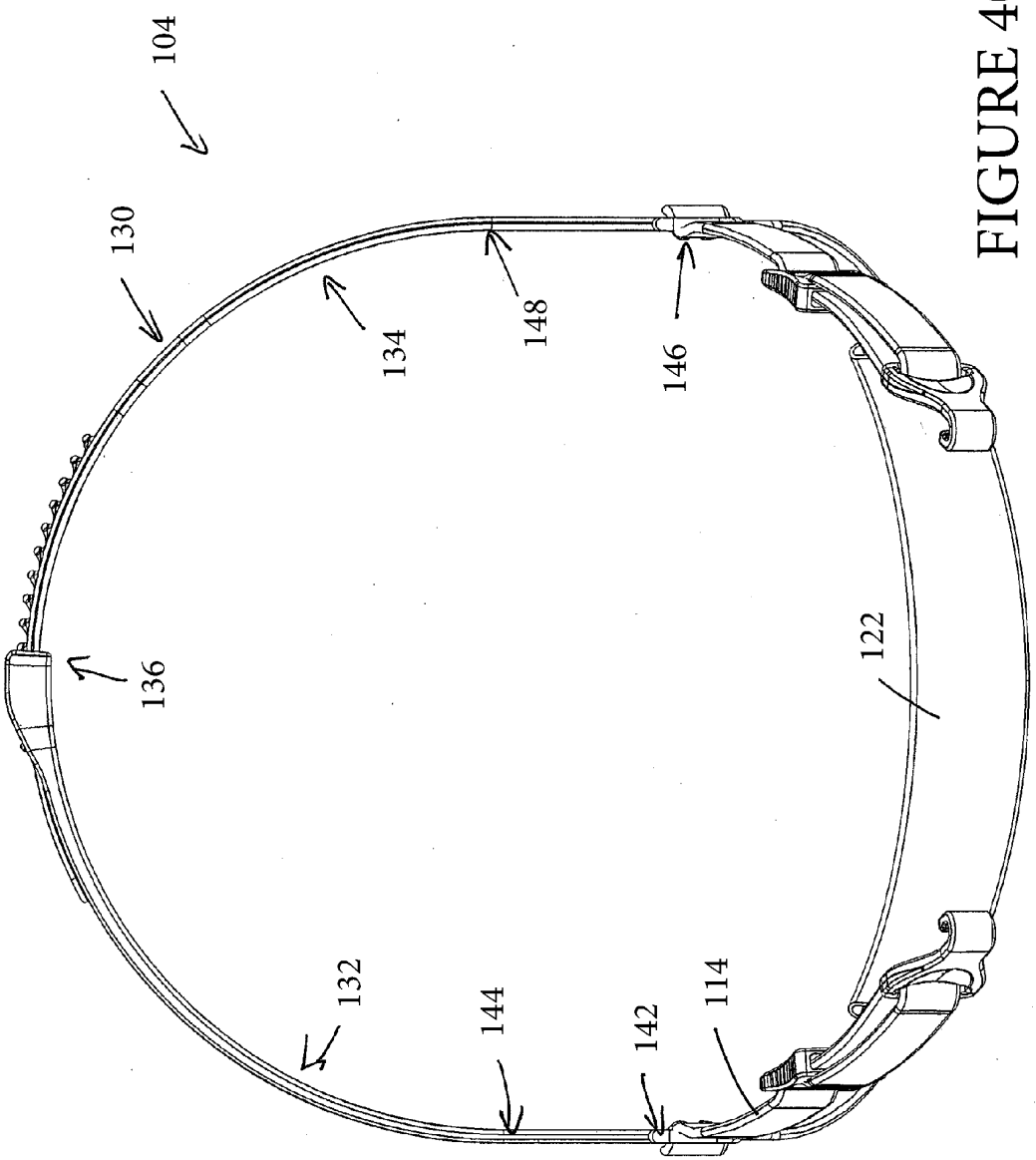

FIGURE 40

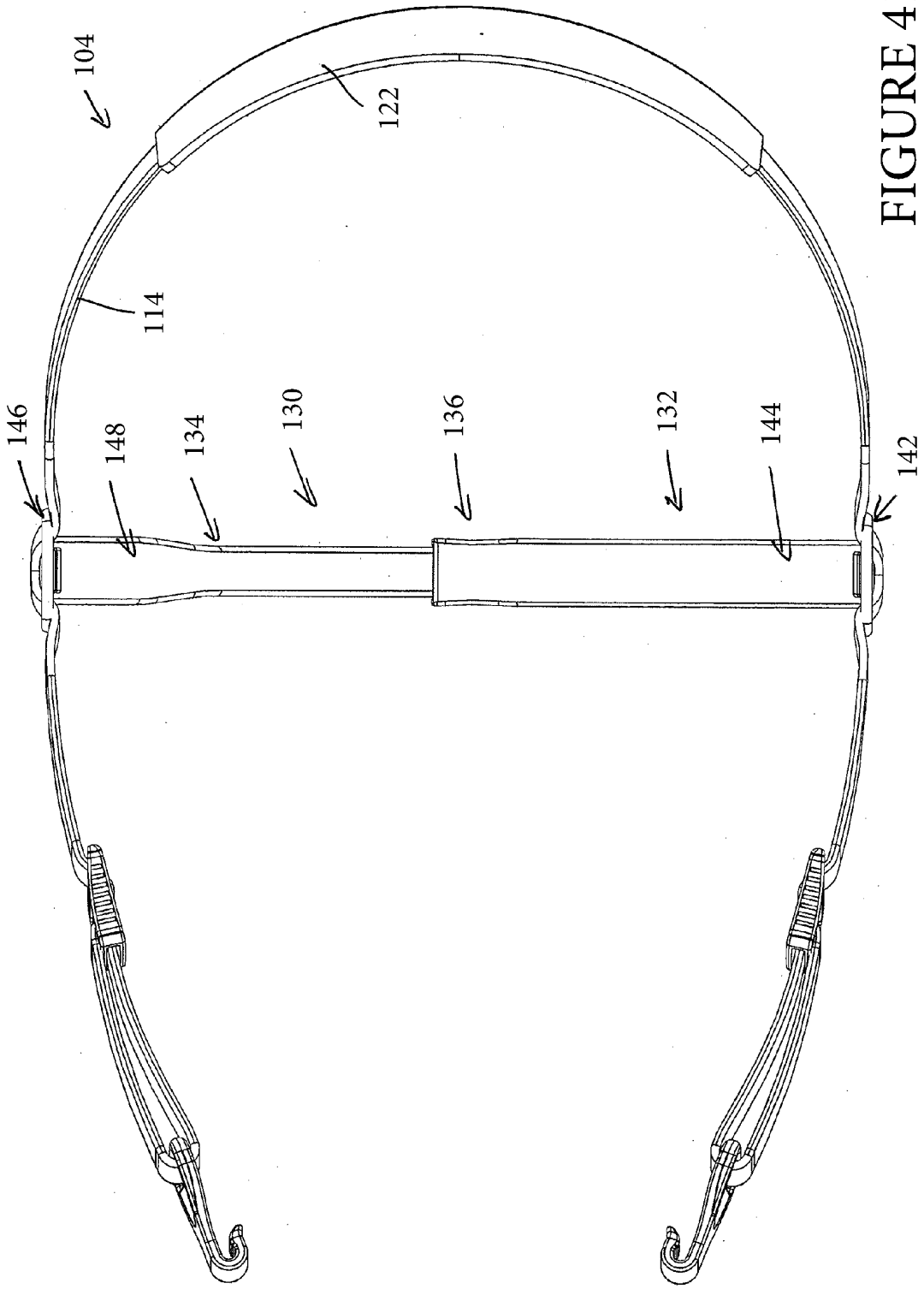

FIGURE 41

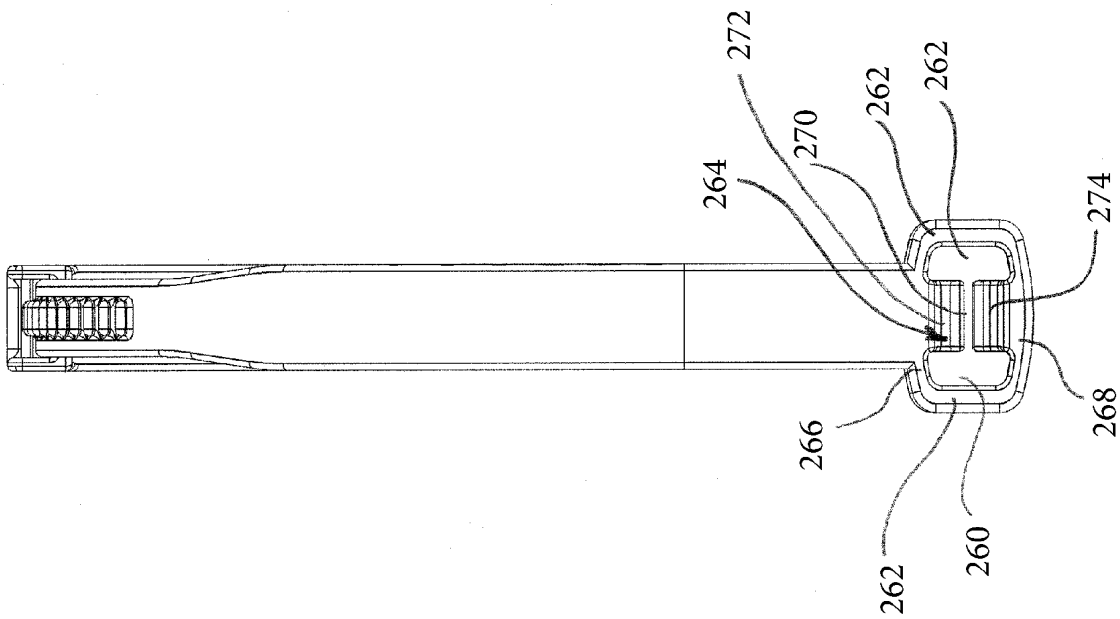

FIGURE 42

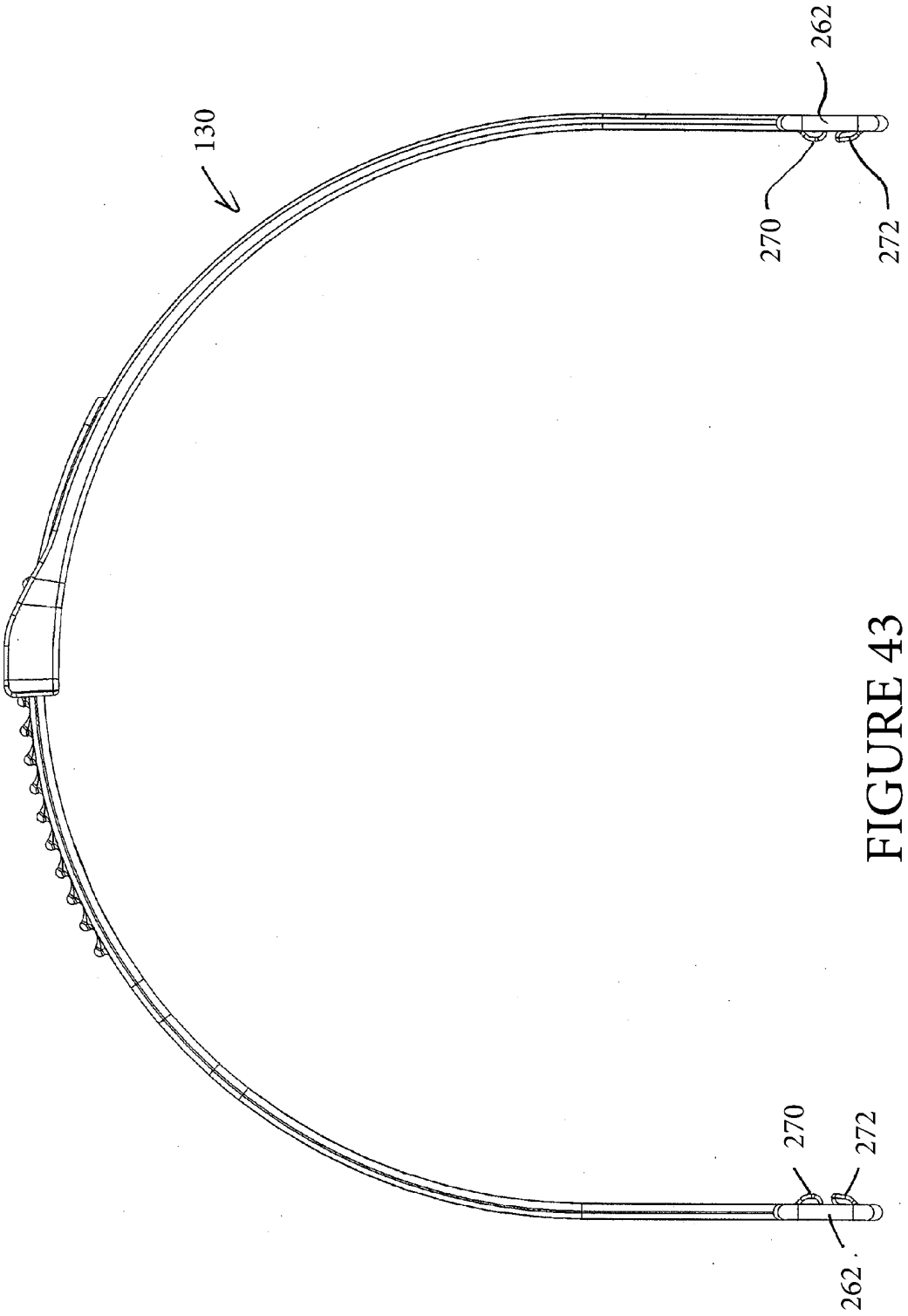

FIGURE 43

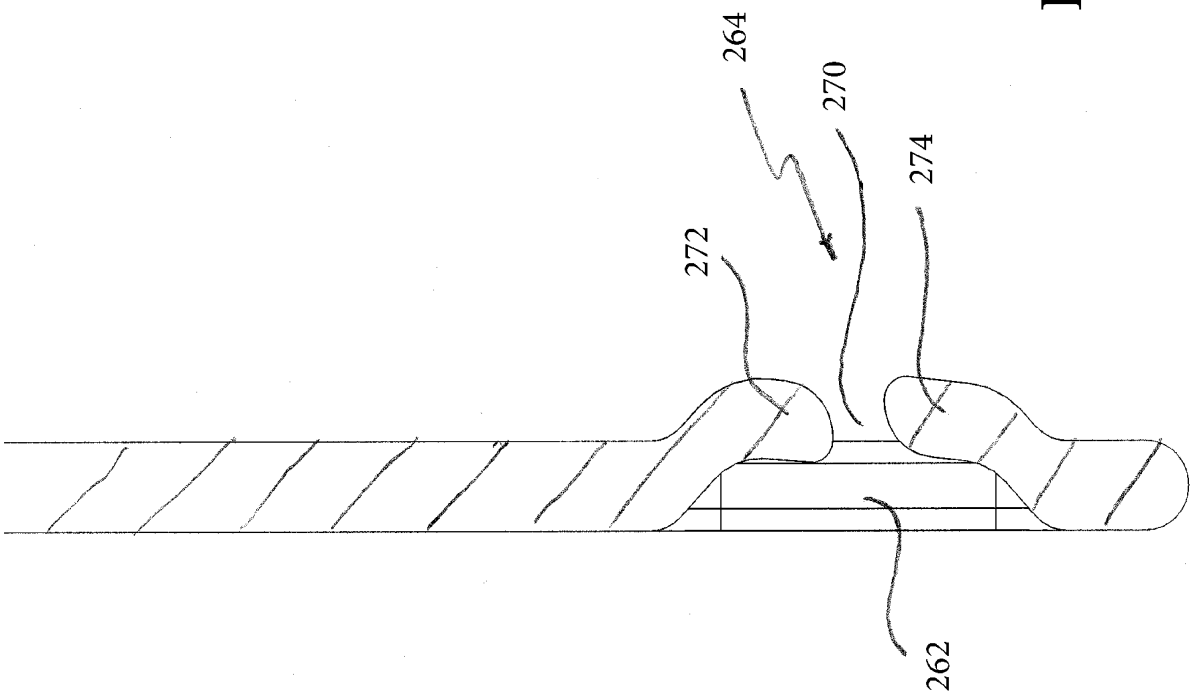

FIGURE 44

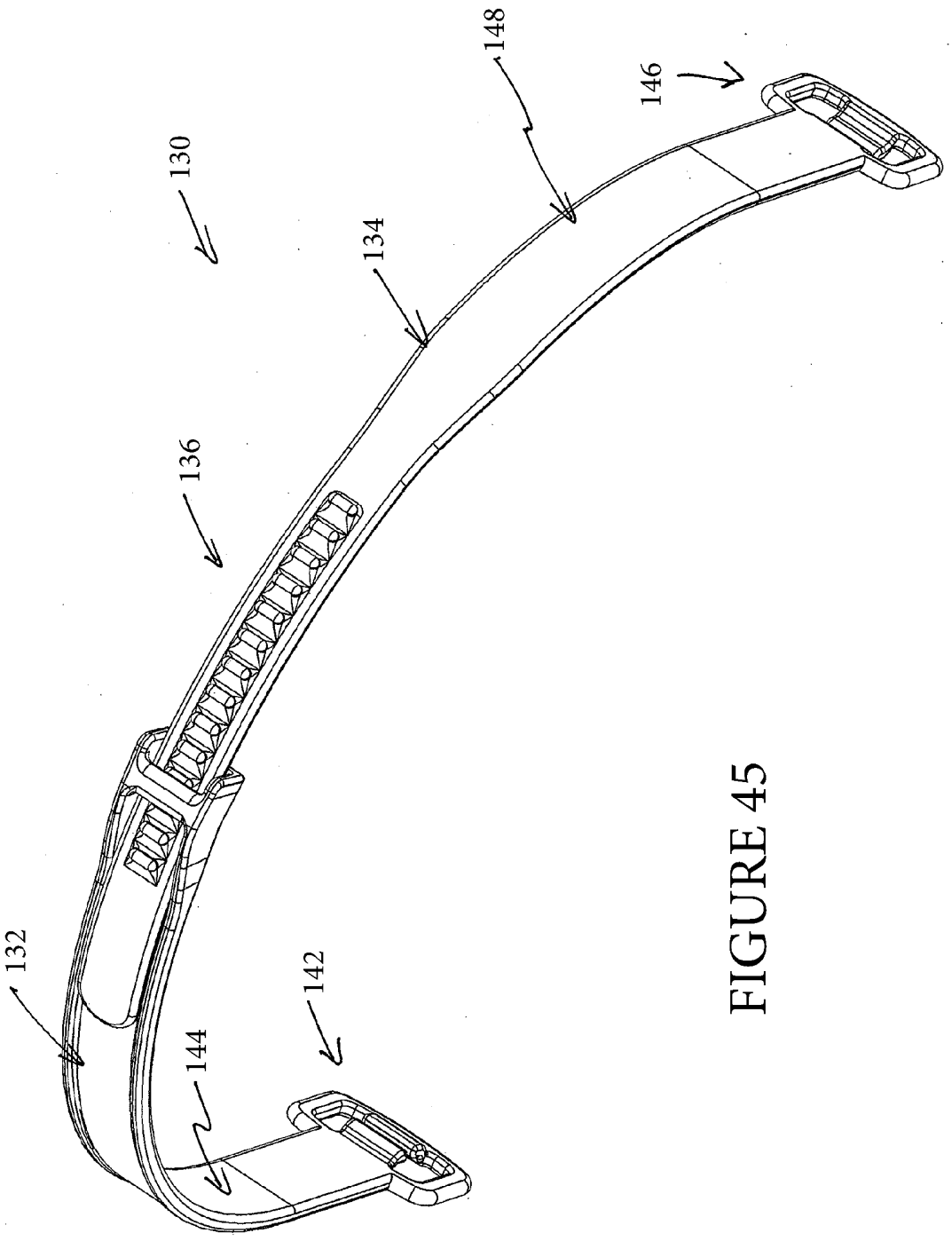

FIGURE 45