FIGURE 1

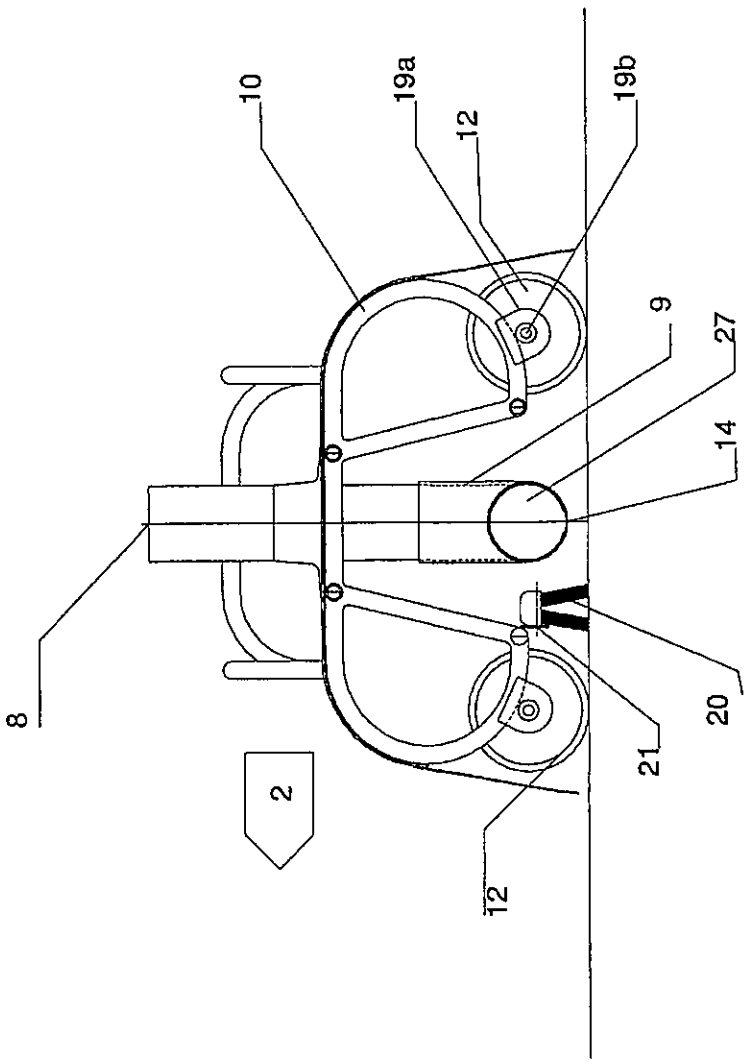

FIGURE2

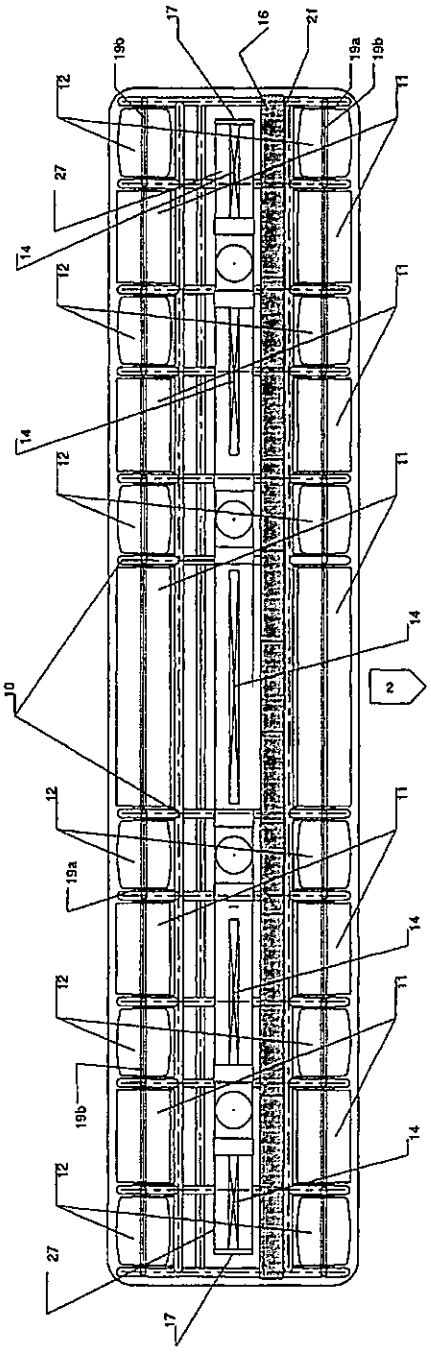

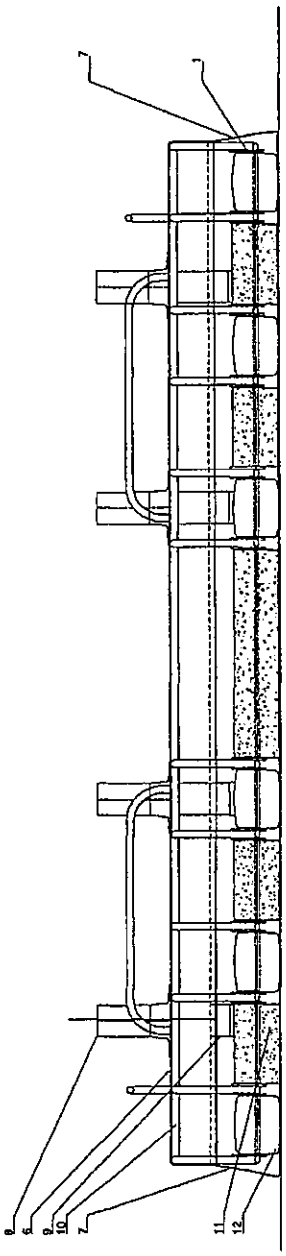

FIGURE3A

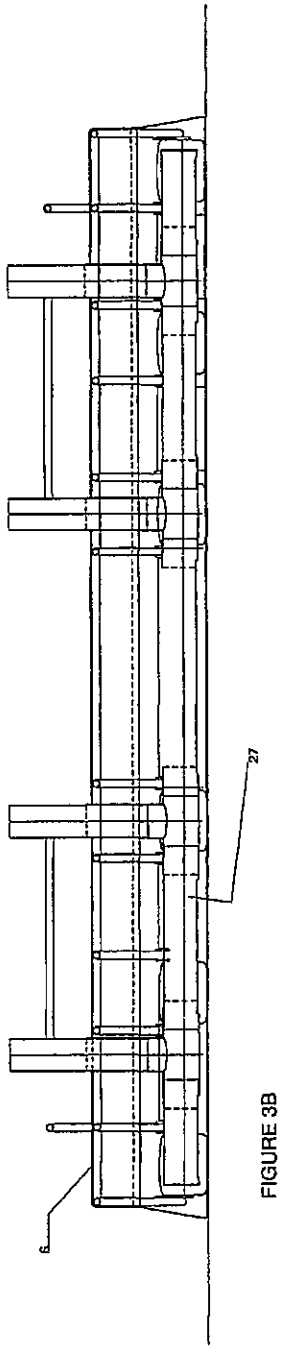

FIGURE 3B

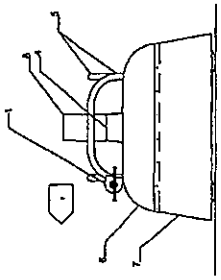

FIGURE 4A

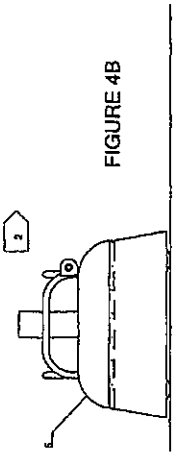

FIGURE 4B

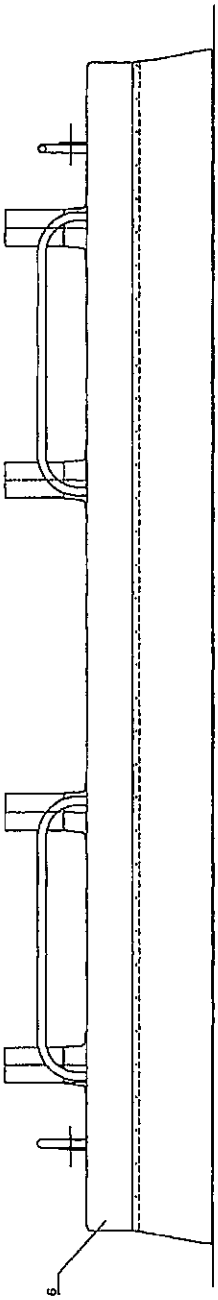

FIGURE 4C

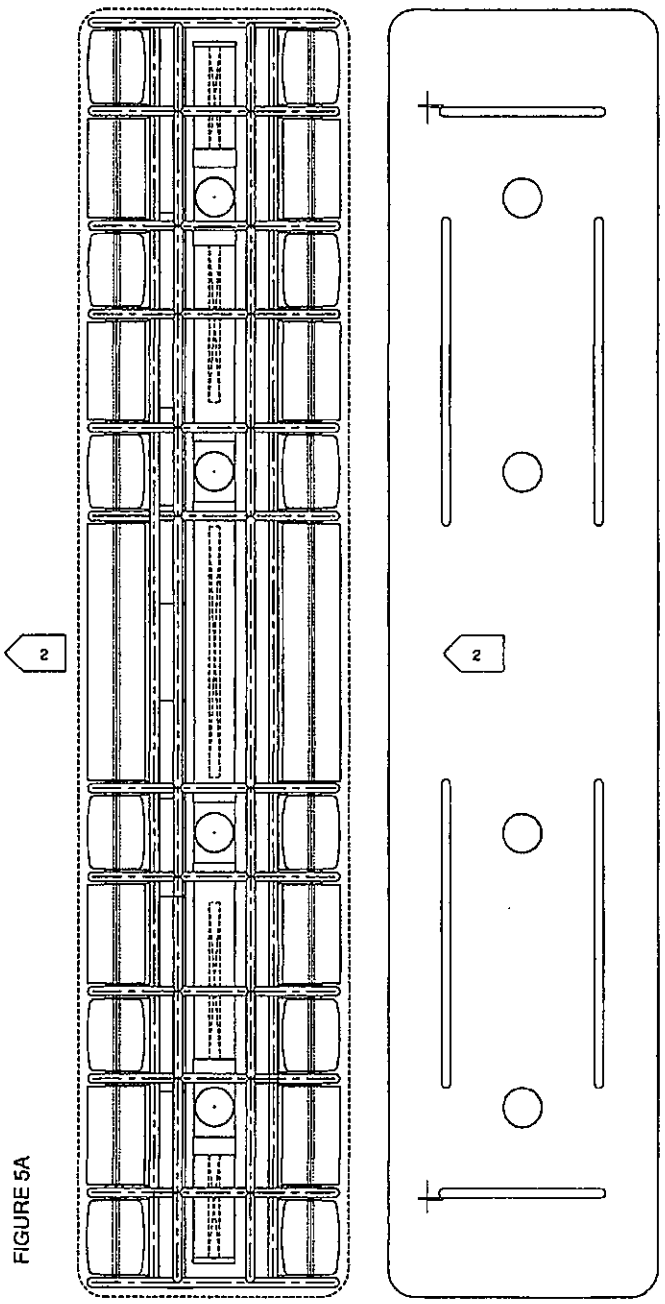

FIGURE 5A

FIGURE 5B

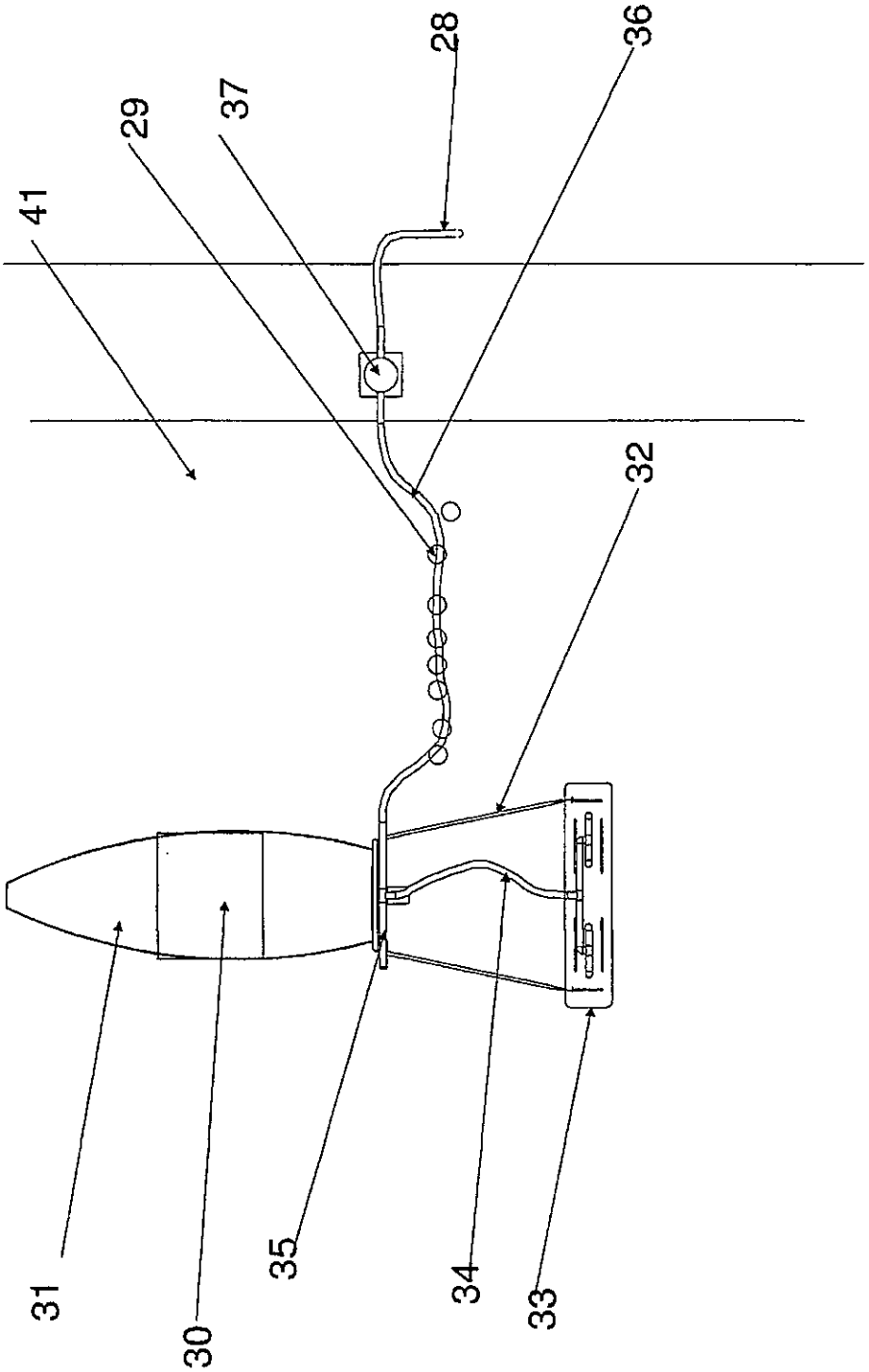

FIGURE 6

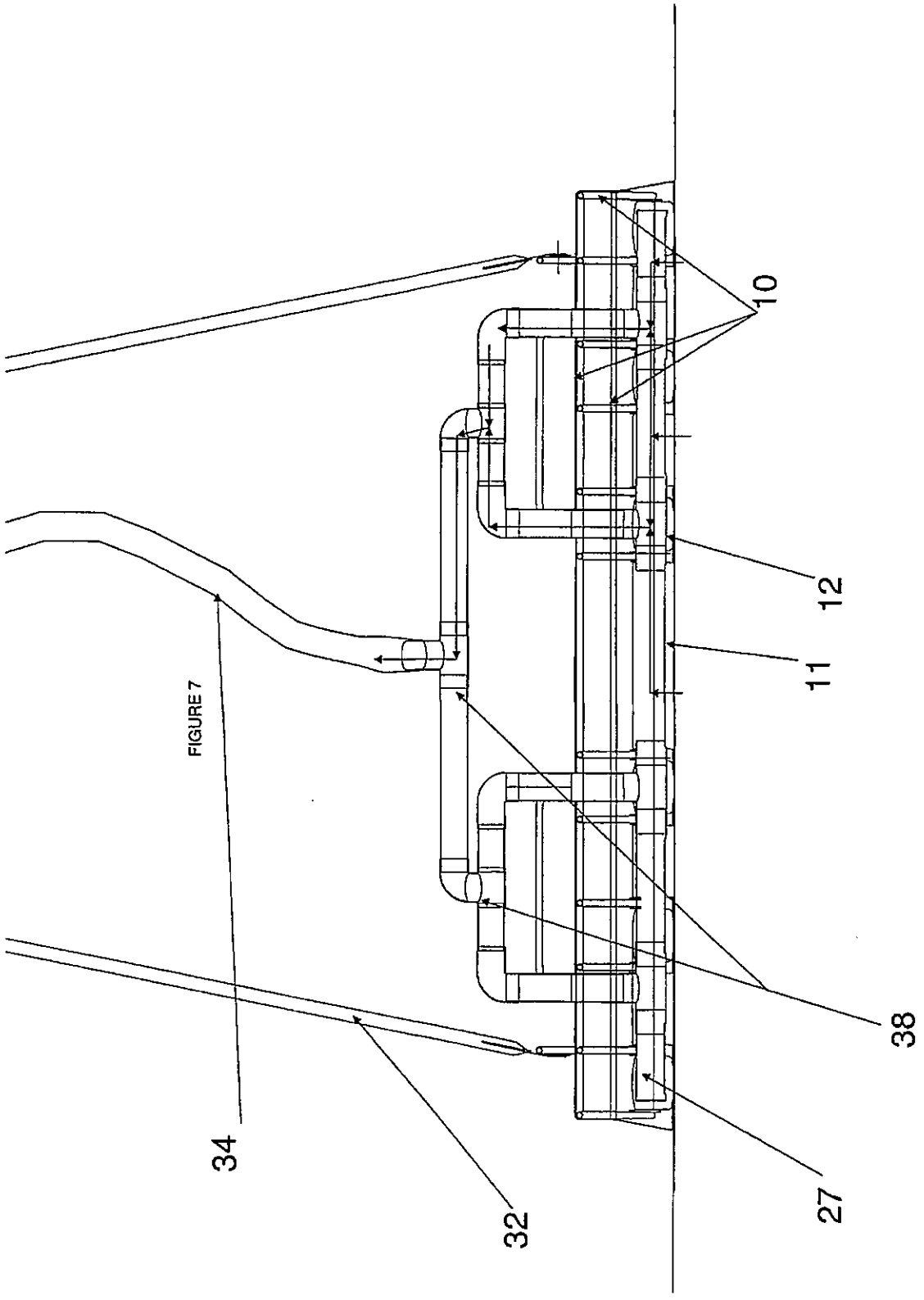

FIGURE 7

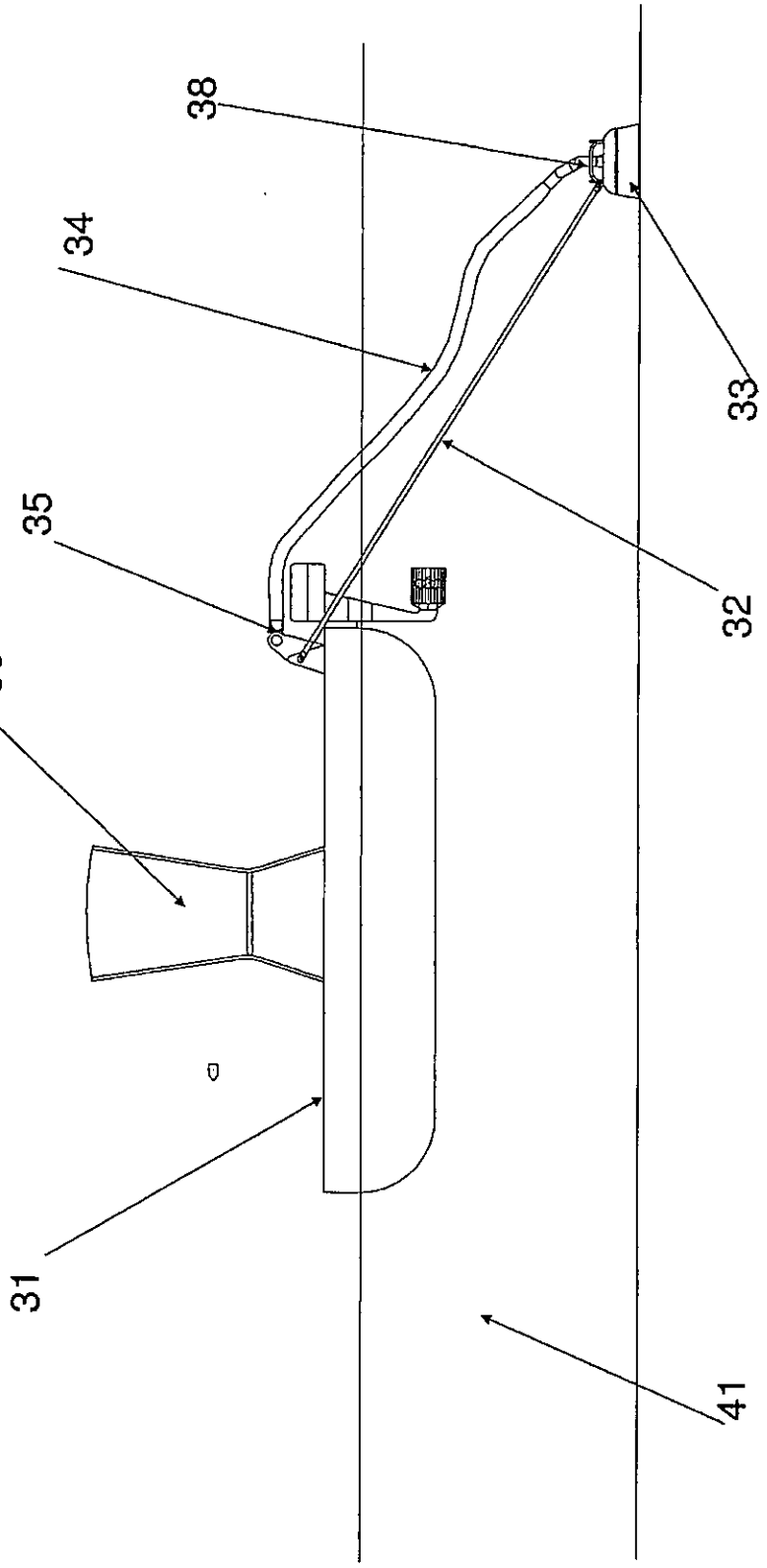

FIGURE 8

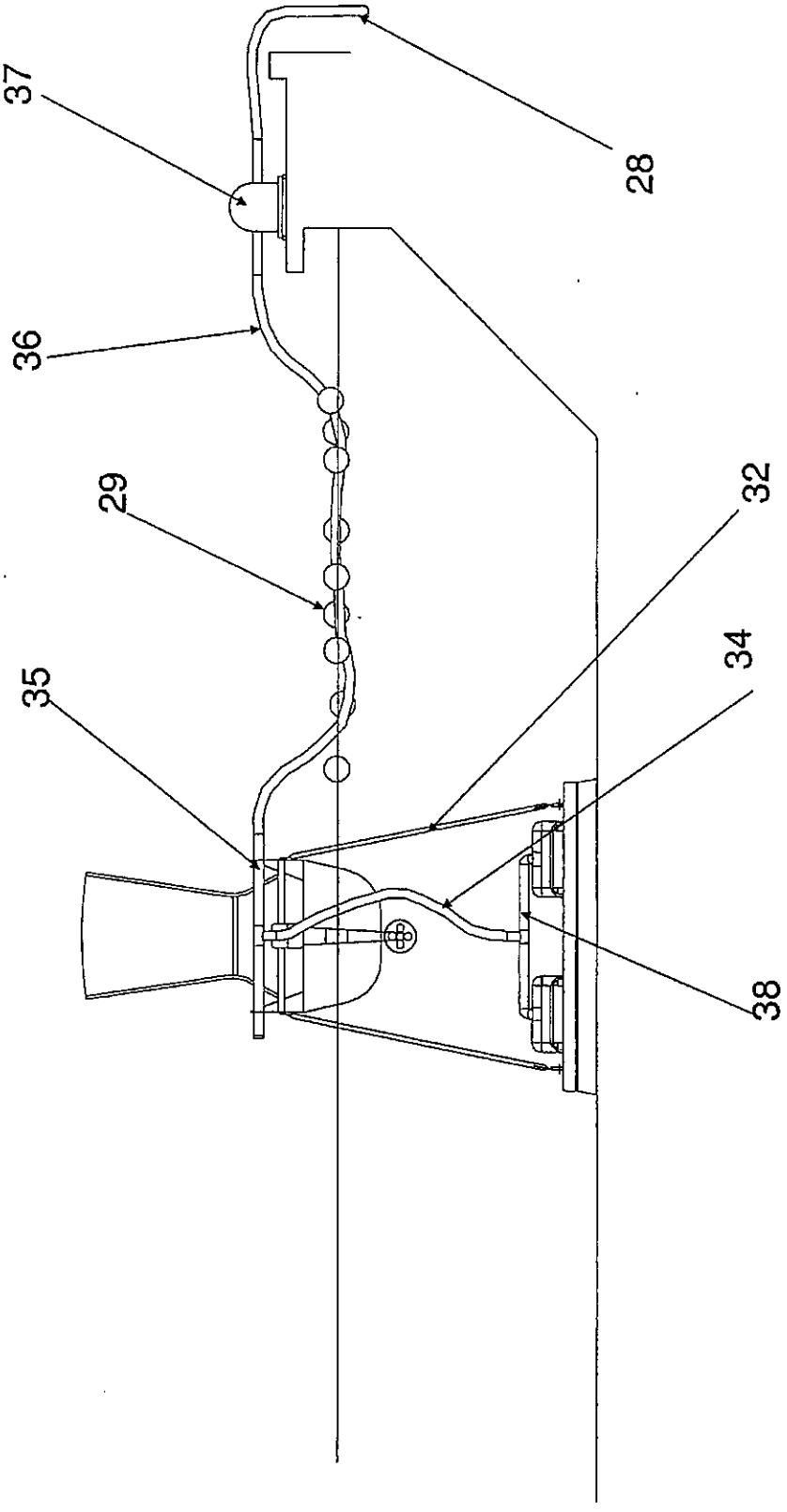

FIGURE 9

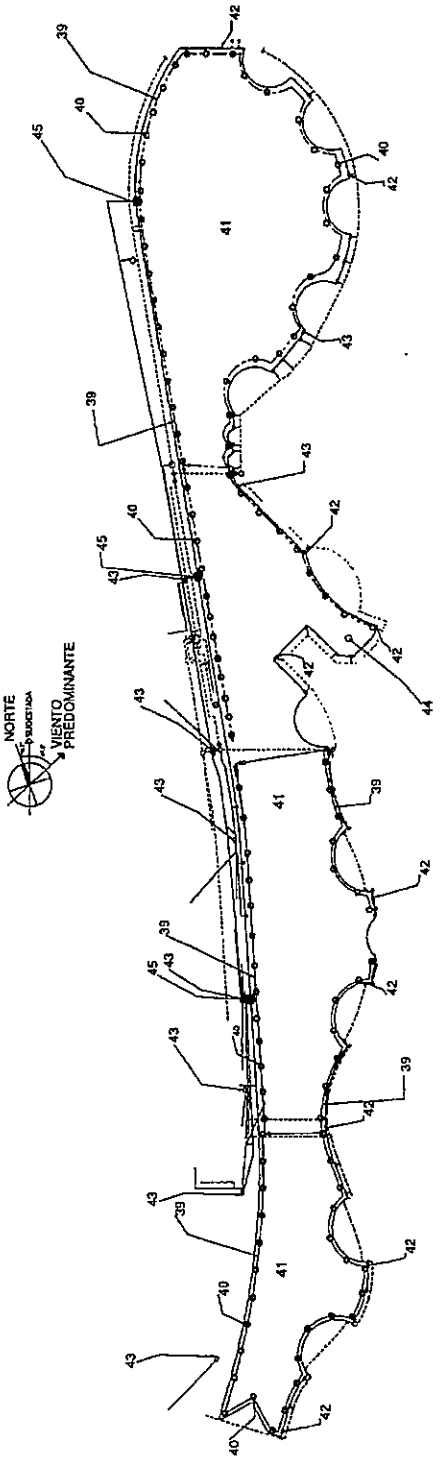

FIGURE 10



Figure 11

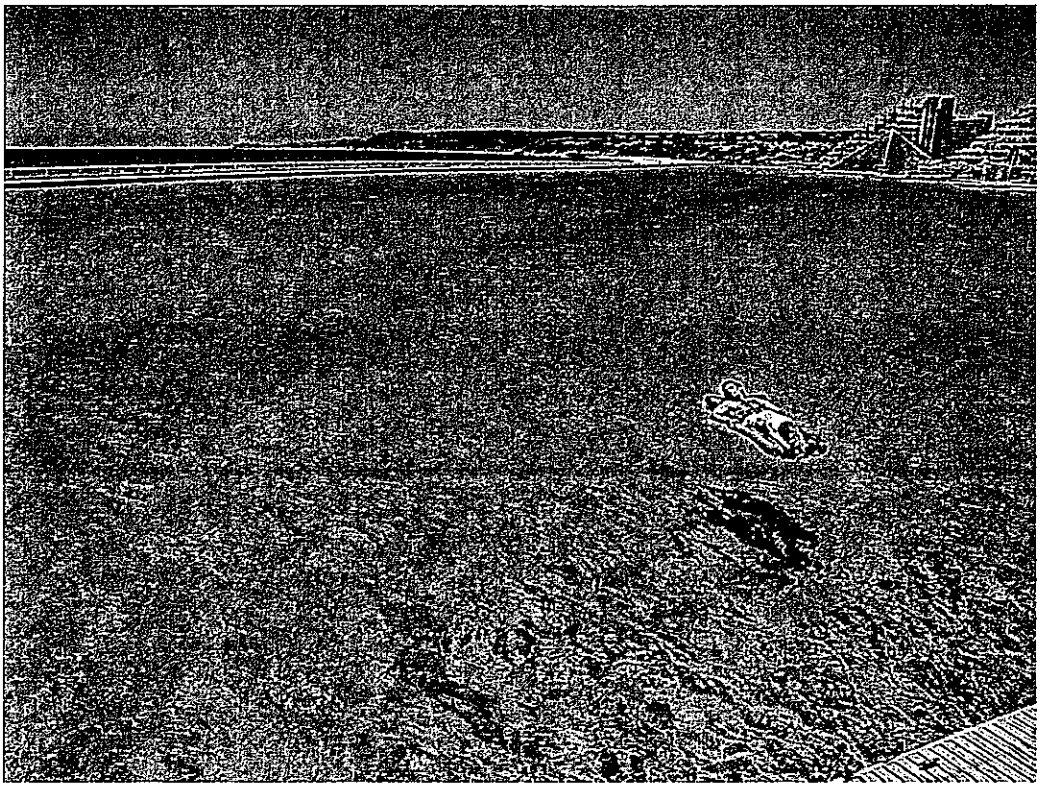

Figure 12

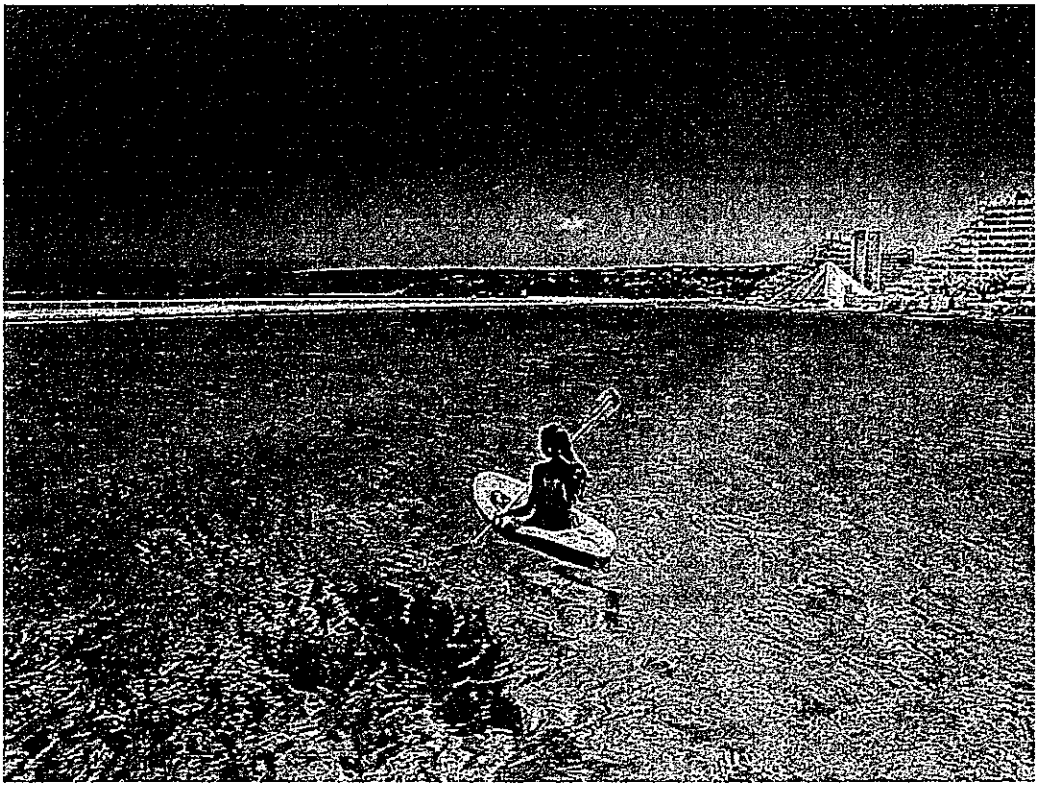

Figure 13

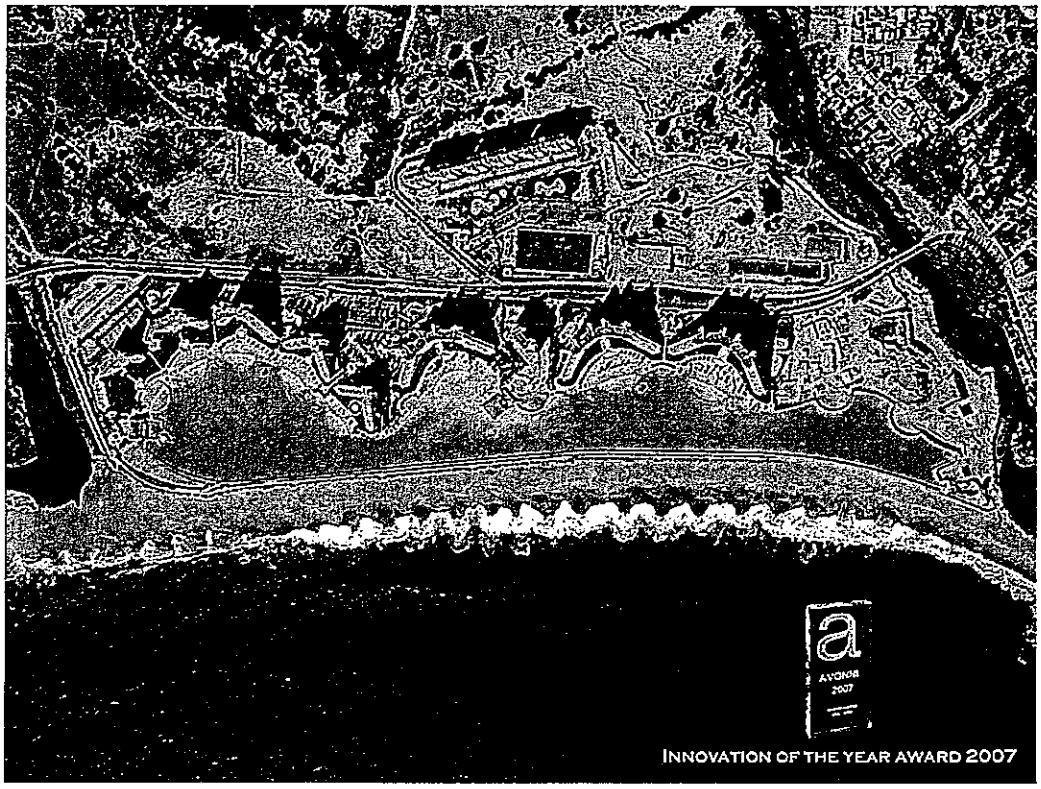

Figure 14

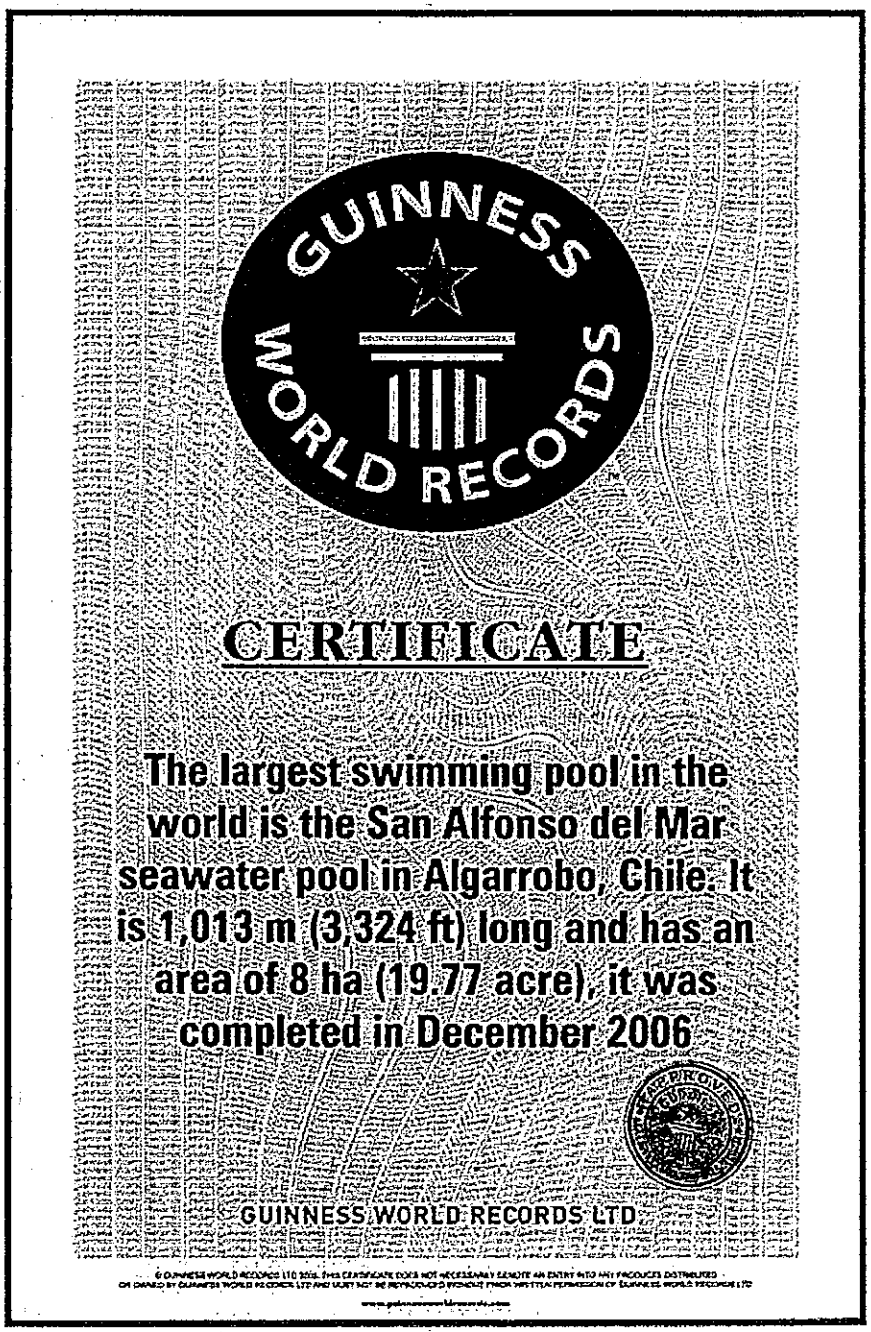
GUINNESS WORLD RECORDS
CERTIFICATE
The largest swimming pool in the world is the San Alfonso del Mar seawater pool in Algarrobo, Chile. It is 1,013 m (3,324 ft) long and has an area of 8 ha (19.77 acre), it was completed in December 2006
GUINNESS WORLD RECORDS LTD

Figure 15