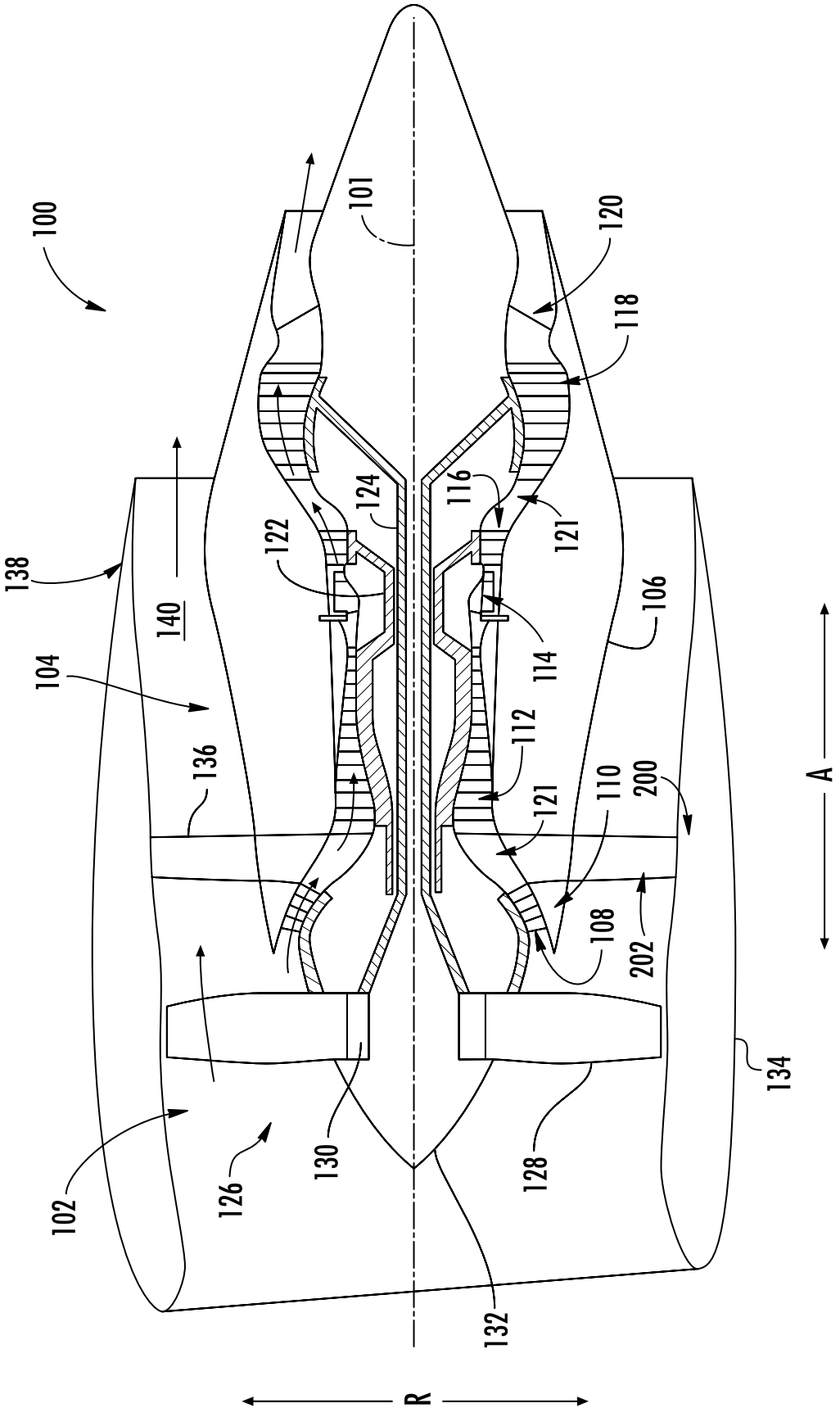
100
101
120
118
116
121
124
122
138
140
104
106
114
112
136
121
110
200
108
202
134
102
126
130
128
132
A
R

FIG. 1

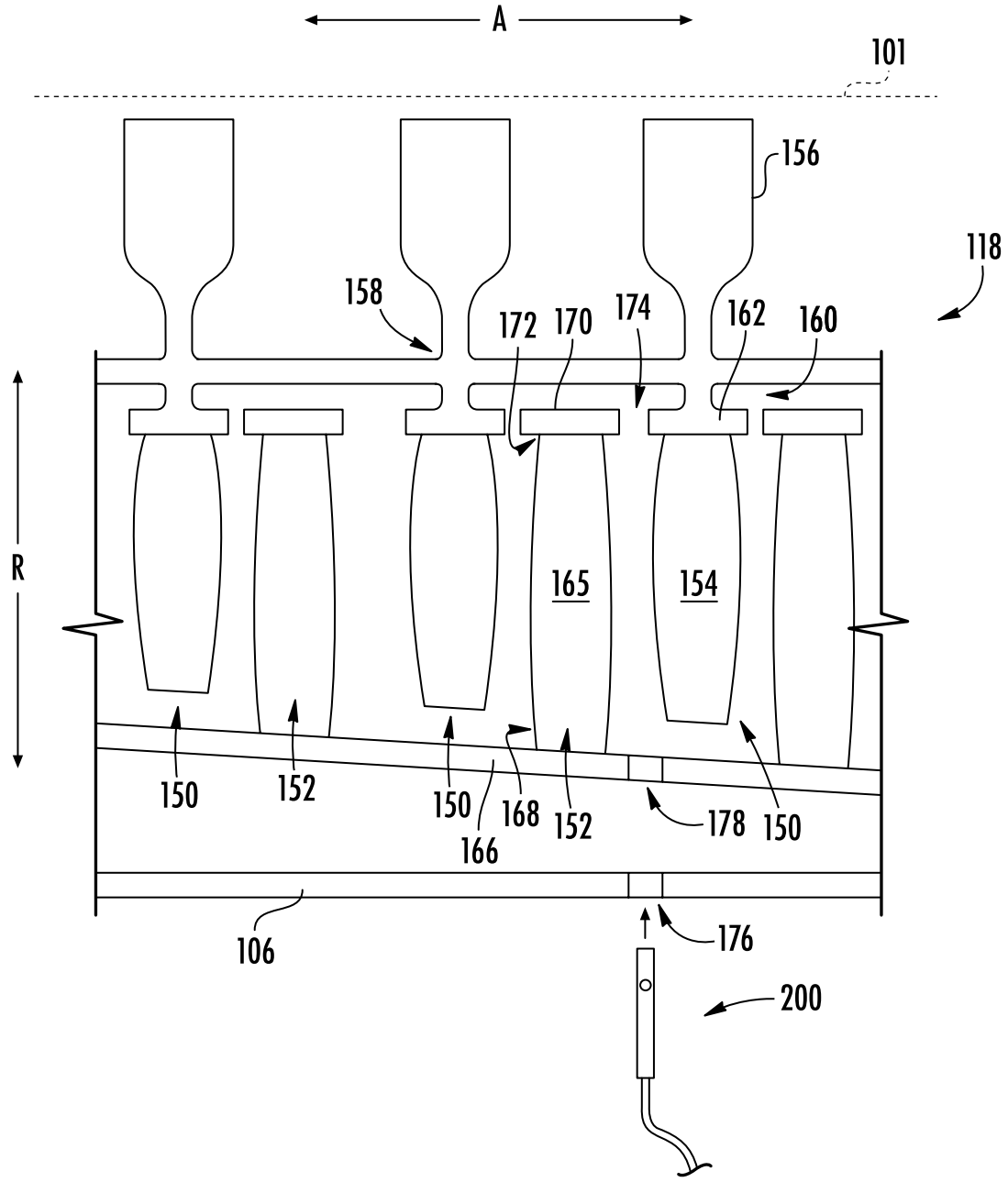
A
101
156
118
158
172
170
174
162
160
R
165
154
150
152
150
168
166
152
178
150
106
176
200

FIG. 2

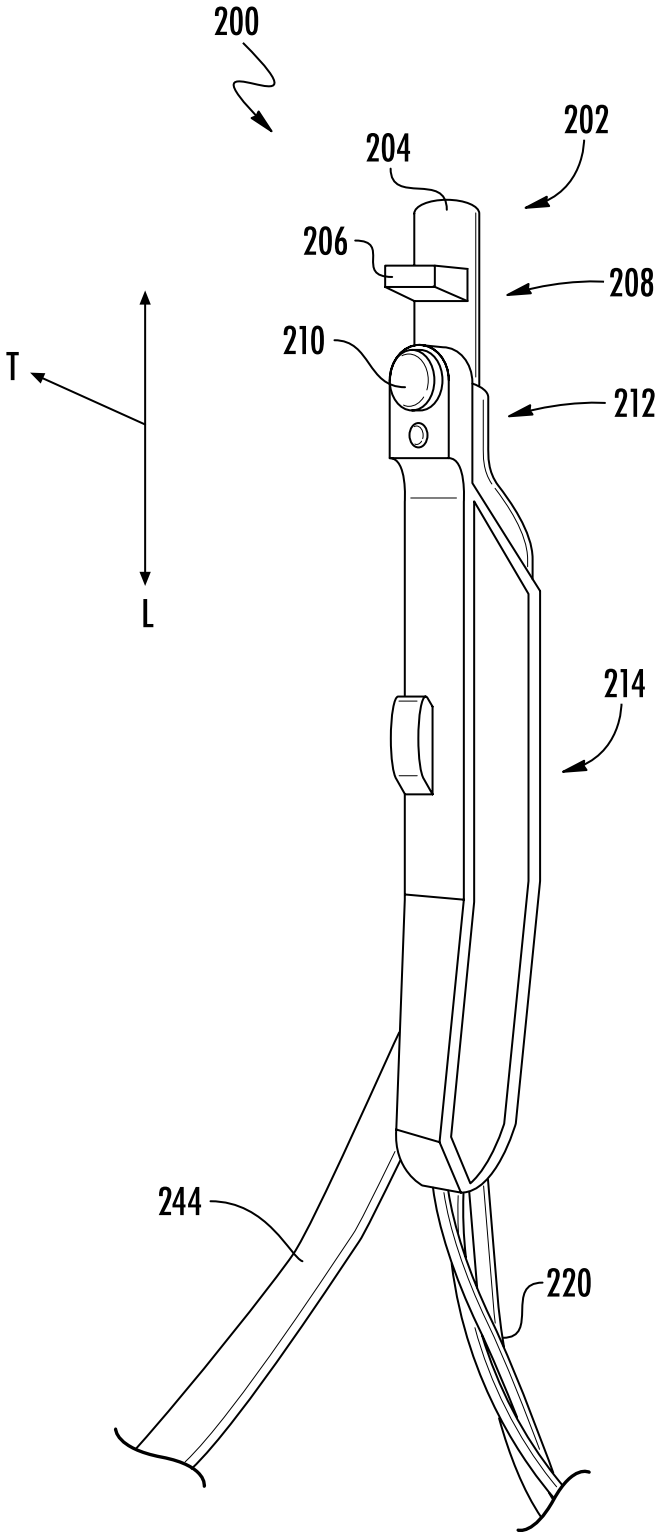

FIG. 3

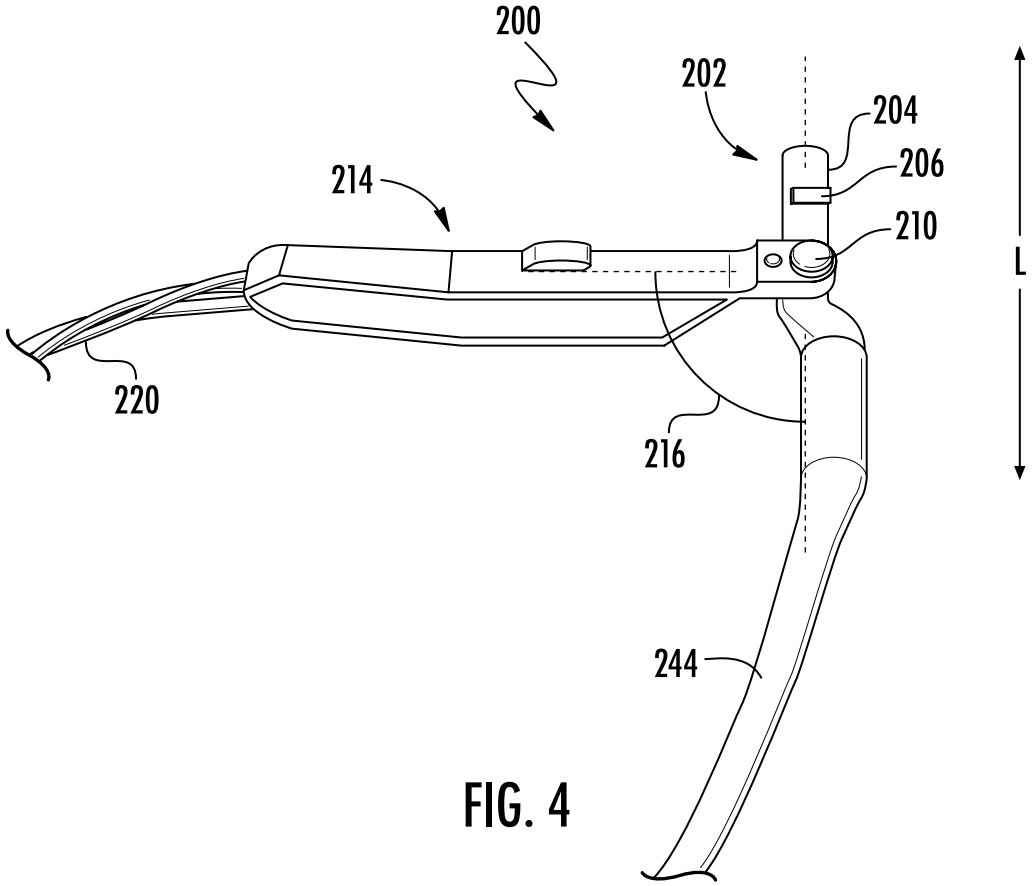
200
202
204
206
214
210
L
220
216
244

FIG. 4

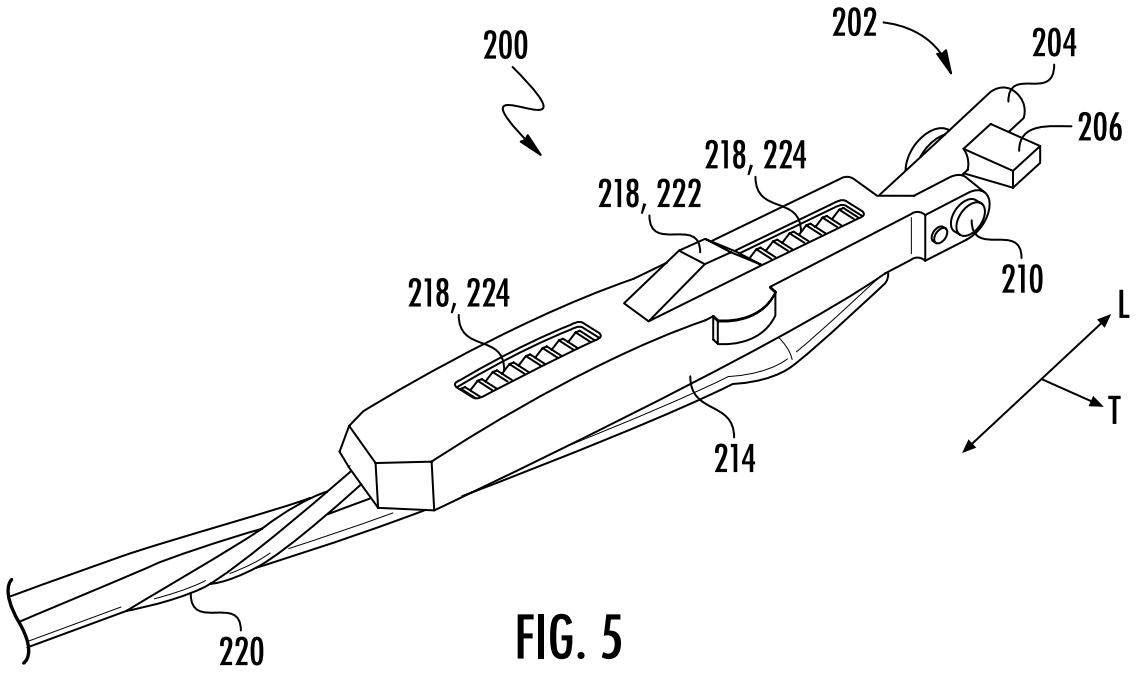
202
200
204
206
218, 224
218, 222
210
218, 224
L
T
214
220

FIG. 5

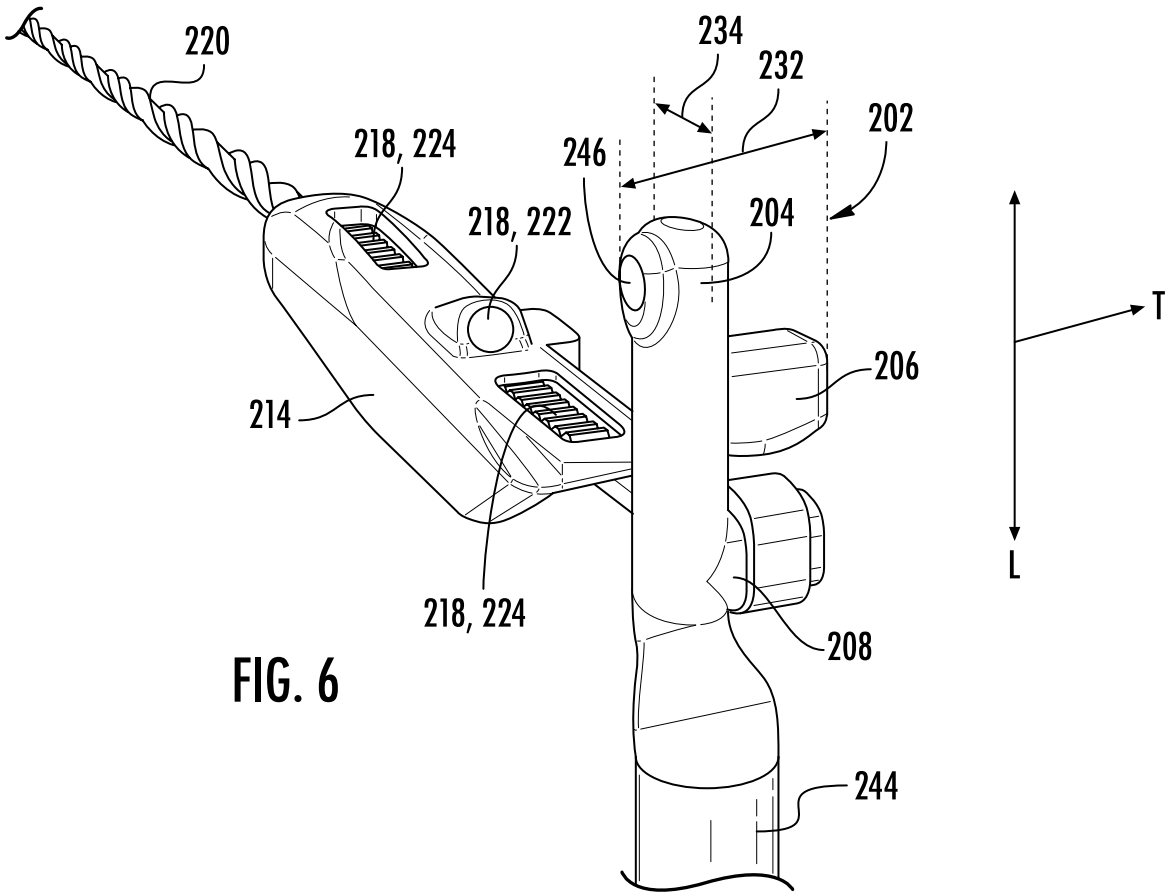

FIG. 6

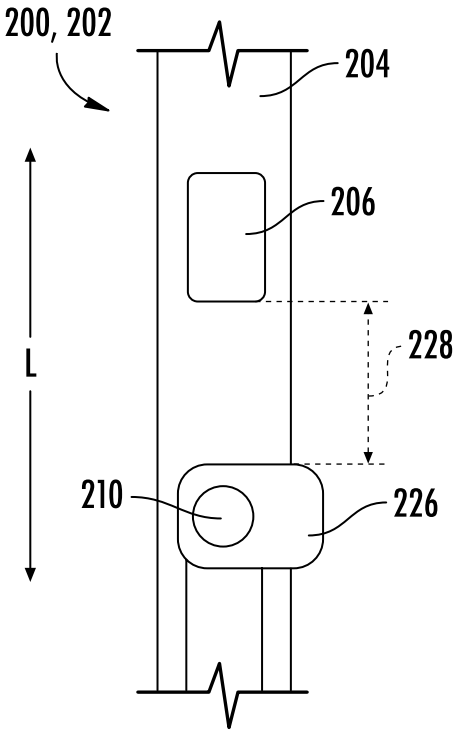

FIG. 7

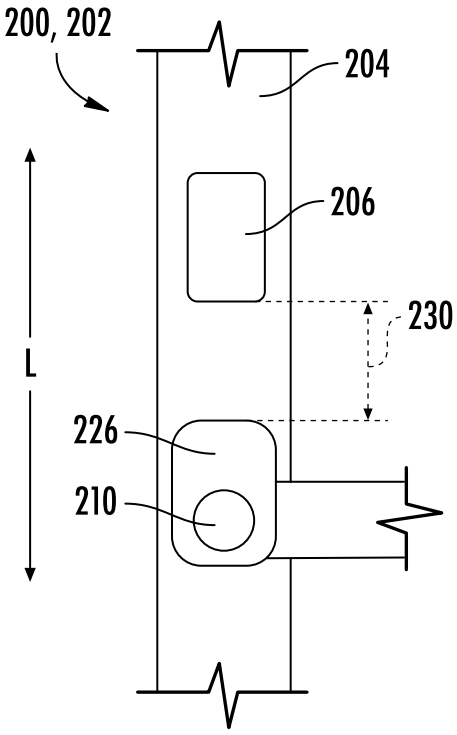

FIG. 8

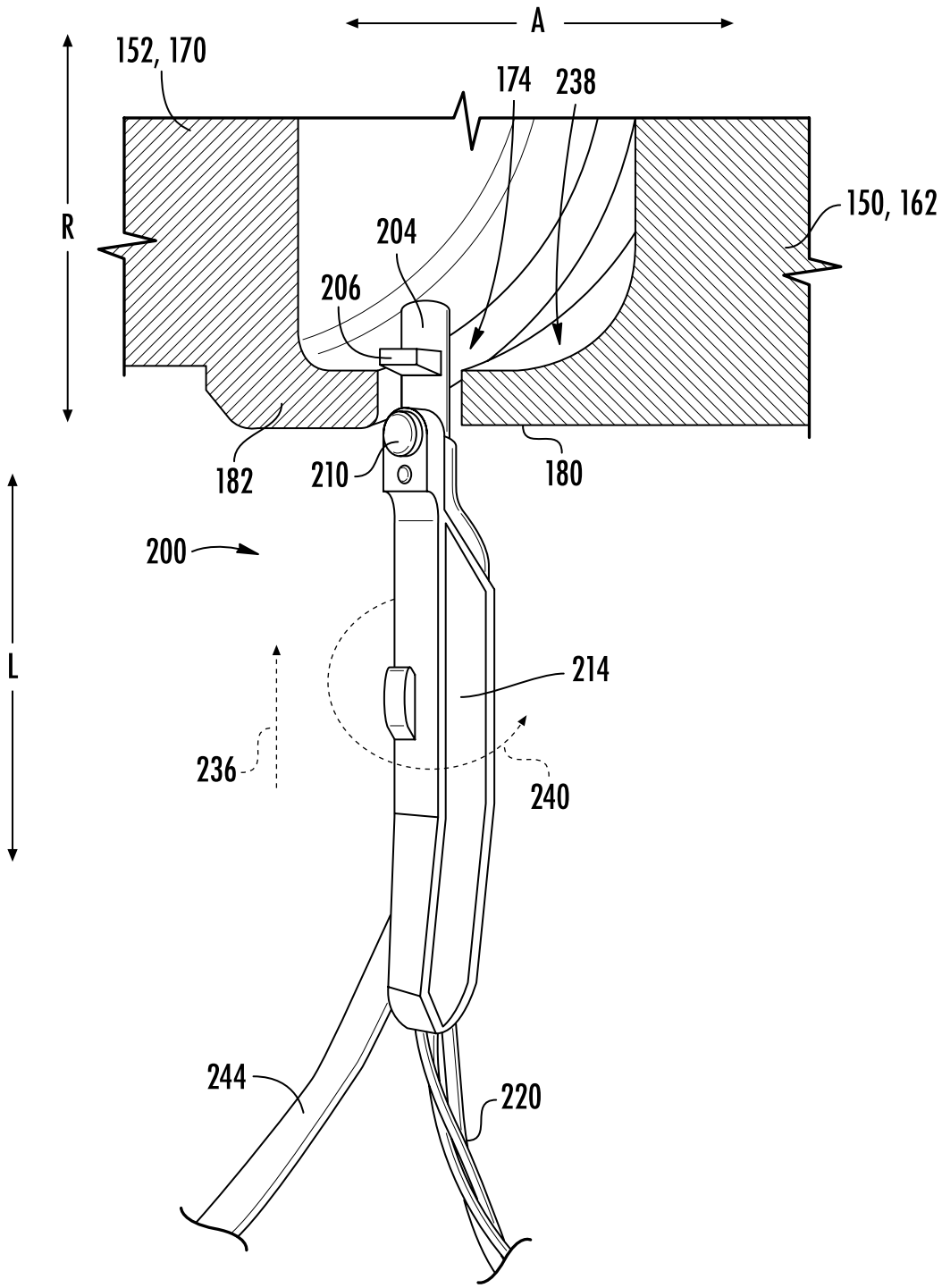
A
152, 170
174
238
150, 162
R
204
206
182
210
180
200
L
214
236
240
244
220

FIG. 9

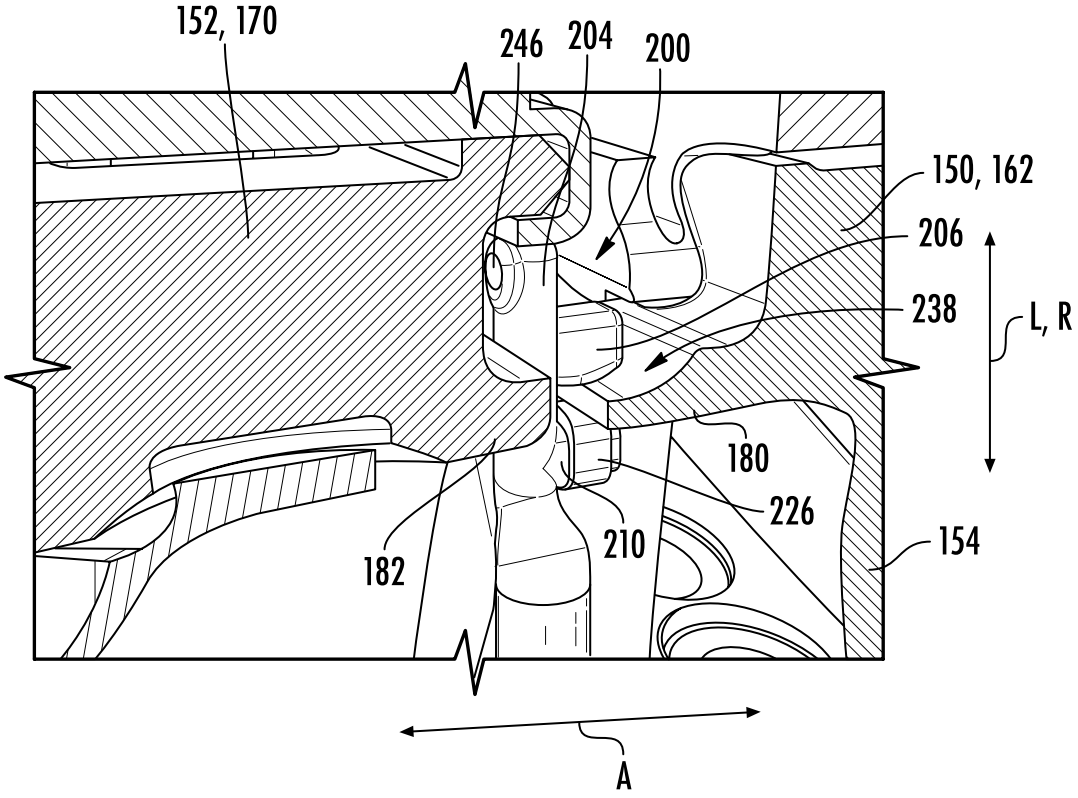
152, 170
246
204
200
150, 162
206
238
L, R
180
226
210
182
154
A

FIG. 10

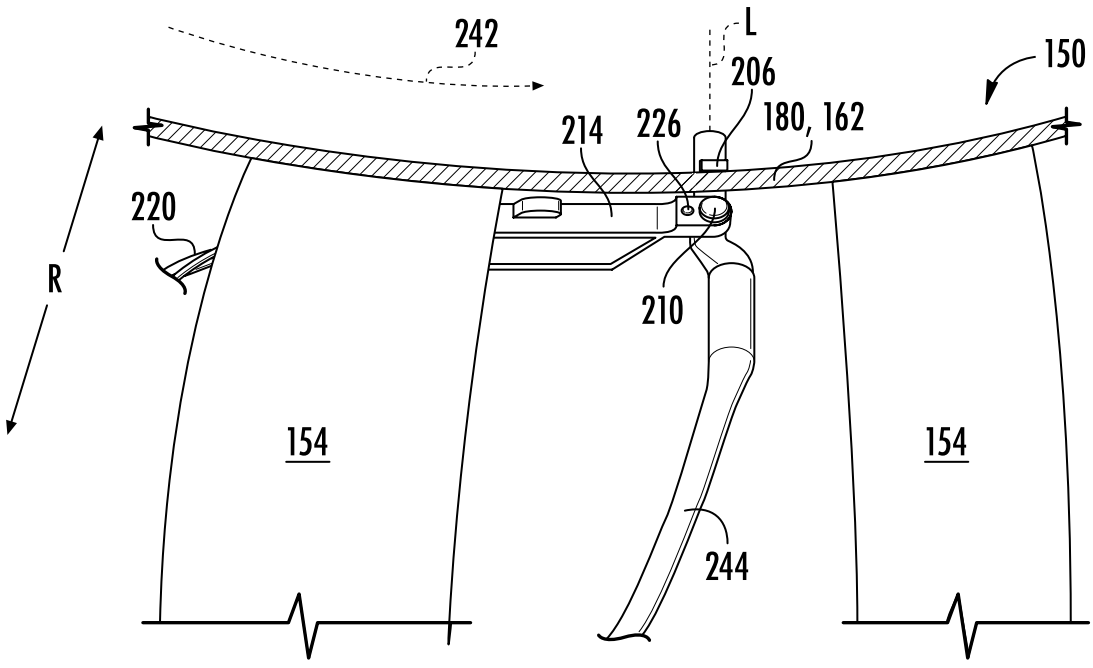
242
L
206
150
214
226
180, 162
220
R
210
154
154
244

FIG. 11

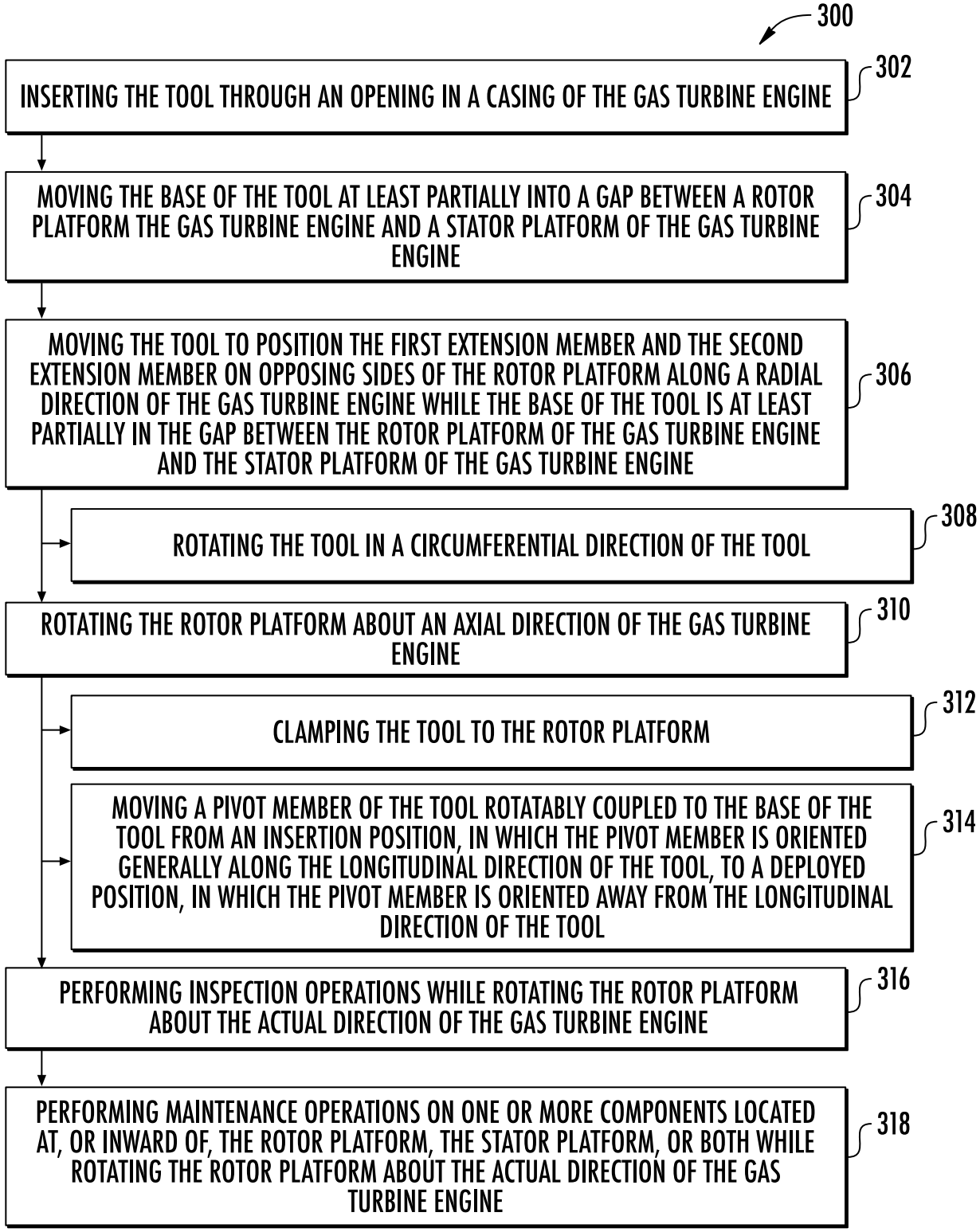
300
INSERTING THE TOOL THROUGH AN OPENING IN A CASING OF THE GAS TURBINE ENGINE
302
MOVING THE BASE OF THE TOOL AT LEAST PARTIALLY INTO A GAP BETWEEN A ROTOR PLATFORM THE GAS TURBINE ENGINE AND A STATOR PLATFORM OF THE GAS TURBINE ENGINE
304
MOVING THE TOOL TO POSITION THE FIRST EXTENSION MEMBER AND THE SECOND EXTENSION MEMBER ON OPPOSING SIDES OF THE ROTOR PLATFORM ALONG A RADIAL DIRECTION OF THE GAS TURBINE ENGINE WHILE THE BASE OF THE TOOL IS AT LEAST PARTIALLY IN THE GAP BETWEEN THE ROTOR PLATFORM OF THE GAS TURBINE ENGINE AND THE STATOR PLATFORM OF THE GAS TURBINE ENGINE
306
ROTATING THE TOOL IN A CIRCUMFERENTIAL DIRECTION OF THE TOOL
308
ROTATING THE ROTOR PLATFORM ABOUT AN AXIAL DIRECTION OF THE GAS TURBINE ENGINE
310
CLAMPING THE TOOL TO THE ROTOR PLATFORM
312
MOVING A PIVOT MEMBER OF THE TOOL ROTATABLY COUPLED TO THE BASE OF THE TOOL FROM AN INSERTION POSITION, IN WHICH THE PIVOT MEMBER IS ORIENTED GENERALLY ALONG THE LONGITUDINAL DIRECTION OF THE TOOL, TO A DEPLOYED POSITION, IN WHICH THE PIVOT MEMBER IS ORIENTED AWAY FROM THE LONGITUDINAL DIRECTION OF THE TOOL
314
PERFORMING INSPECTION OPERATIONS WHILE ROTATING THE ROTOR PLATFORM ABOUT THE ACTUAL DIRECTION OF THE GAS TURBINE ENGINE
316
PERFORMING MAINTENANCE OPERATIONS ON ONE OR MORE COMPONENTS LOCATED AT, OR INWARD OF, THE ROTOR PLATFORM, THE STATOR PLATFORM, OR BOTH WHILE ROTATING THE ROTOR PLATFORM ABOUT THE ACTUAL DIRECTION OF THE GAS TURBINE ENGINE
318

FIG. 12