9801996-3
RTMP
COPY

PCT WORLD INTELLECTUAL PROPERTY ORGANIZATION
International Bureau

INTERNATIONAL APPLICATION PUBLISHED UNDER THE PATENT COOPERATION TREATY (PCT)

(51) International Patent Classification 6 : H02N 13/00	A1	(11) International Publication Number: WO 97/03495
		(43) International Publication Date: 30 January 1997 (30.01.97)

(21) International Application Number: PCT/US96/10739

(22) International Filing Date: 21 June 1996 (21.06.96)

(30) Priority Data:
08/500,480 10 July 1995 (10.07.95) US

(71) Applicant: WATKINS JOHNSON COMPANY [US/US]; 3333 Hillview Avenue, Palo Alto, CA 94304-1223 (US).

(72) Inventors: VAN OS, Ron; 715 Timberpine Street, Sunnyvale, CA 94086 (US). ROSS, Eric, D.; 4370 Court Drive, Santa Cruz, CA 95062 (US).

(74) Agents: TEST, Aldo, J. et al.; Flehr, Hohbach, Test, Albritton & Herbert, Suite 3400, 4 Embarcadero Center, San Francisco, CA 94111-4187 (US).

(81) Designated States: CN, SG, European patent (AT, BE, CH, DE, DK, ES, FI, FR, GB, GR, IE, IT, LU, MC, NL, PT, SE).

Published
With international search report.

(54) Title: ELECTROSTATIC CHUCK ASSEMBLY

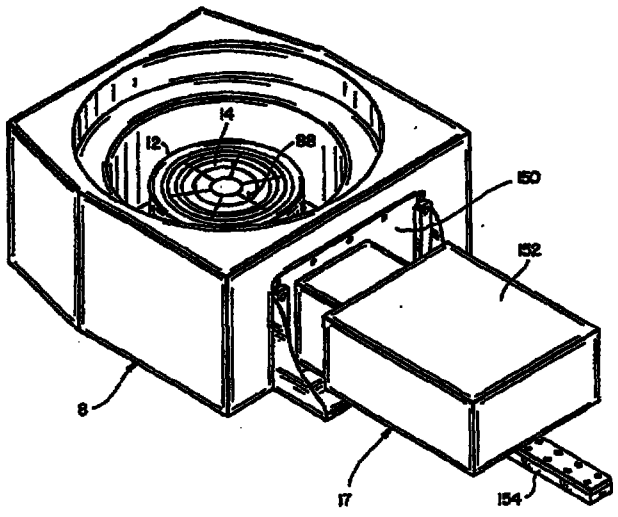

(57) Abstract

An electrostatic support system for retaining a wafer includes a support body (12) having a support surface for retaining the wafer, a voltage source coupled to the support body for electrostatically coupling the wafer to the support surface, and a cooling system for cooling the wafer. A plurality of arm members (16A, B) extend from the support body to a carriage assembly (17) for releasably mounting the support body to the processing chamber (8) with the support body and the arm members separated from the chamber floor. A method of supporting the wafer in a processing chamber includes the steps of positioning the wafer on the wafer supporting surface, applying a voltage to an electrode assembly to electrostatically attract the wafer to the support surface and, after processing the wafer, substantially grounding the electrode assembly to sufficiently deactivate the electrostatic charge for release of the wafer from the support surface.