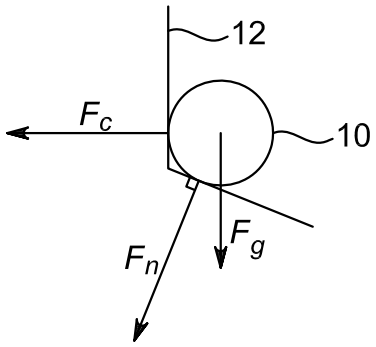

FIG. 1A

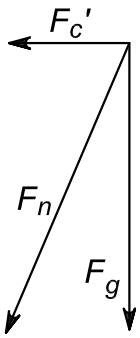

FIG. 1B

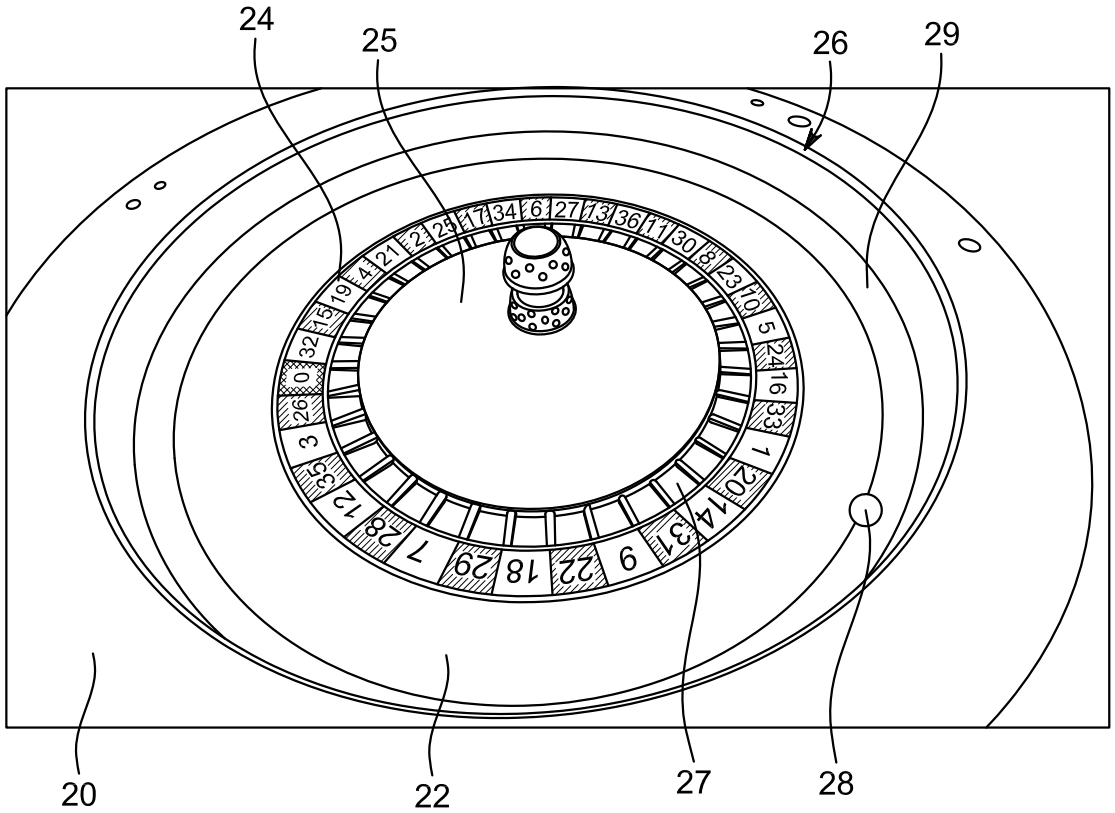

FIG. 2

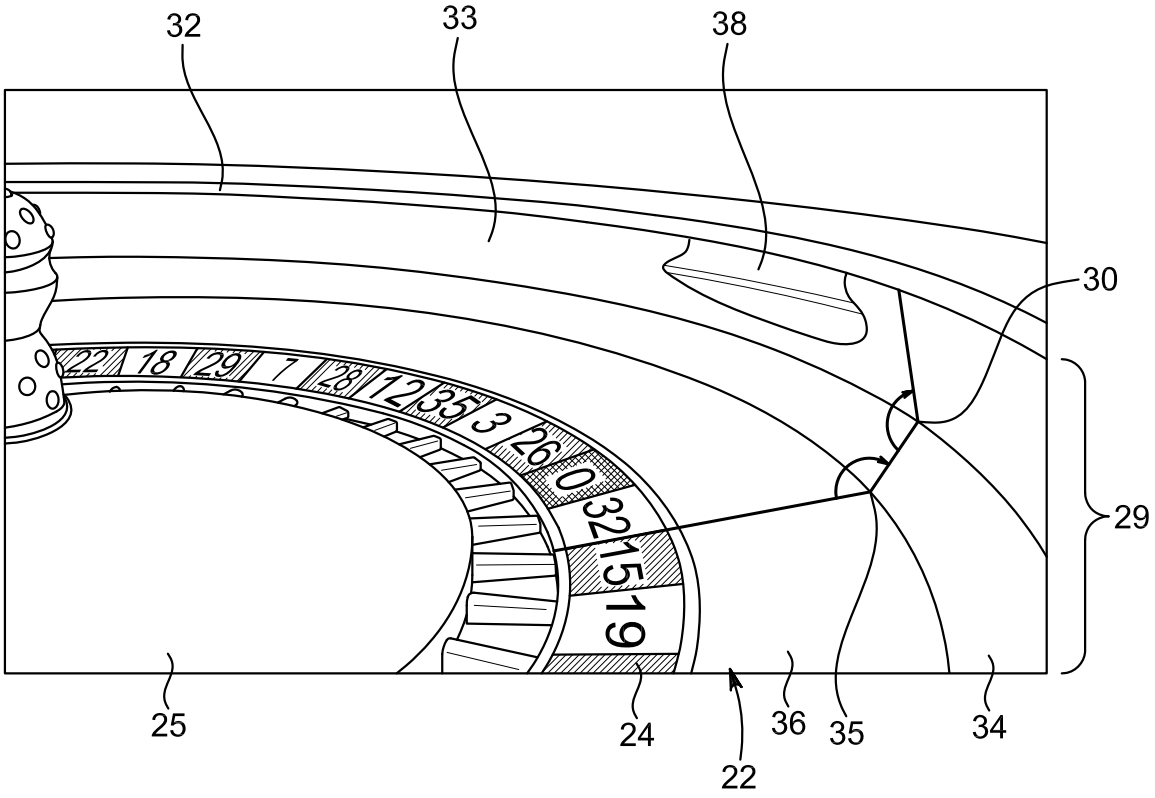
32
33
38
30
29
22
18
29
7
28
12
35
3
26
0
32
15
19
25
24
22
36
35
34

FIG. 3

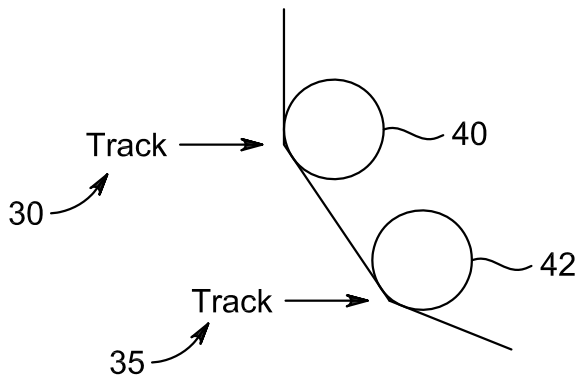
Track
30
40
42
Track
35

FIG. 4A

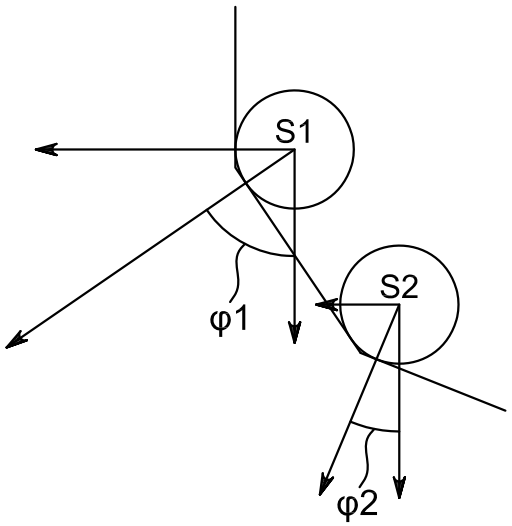

FIG. 4B

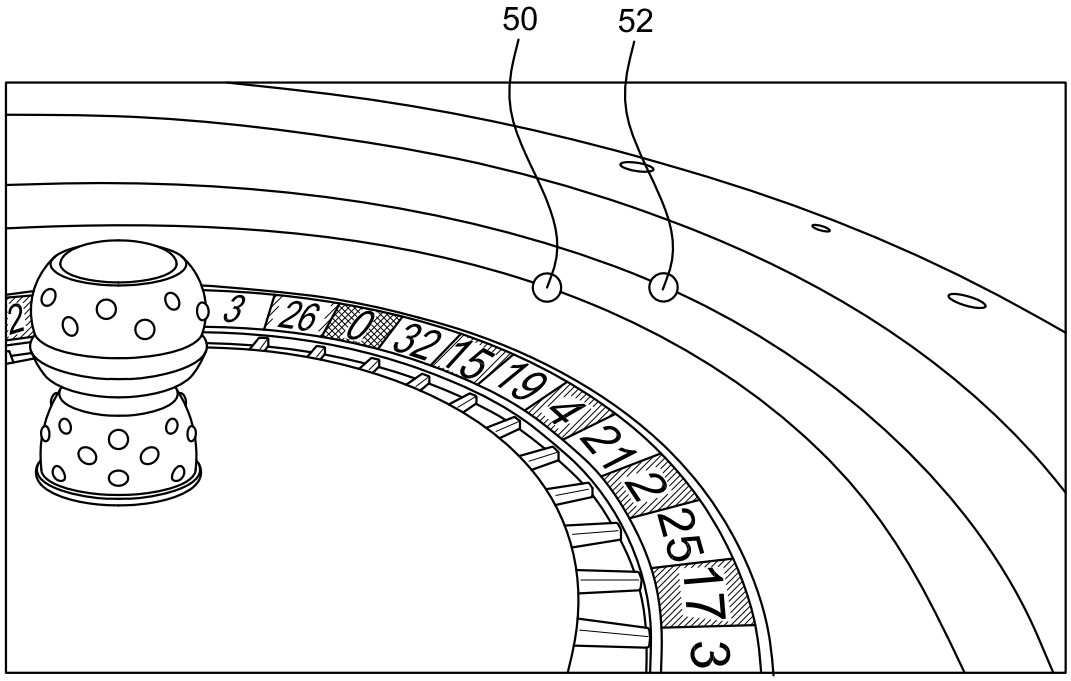

FIG. 5

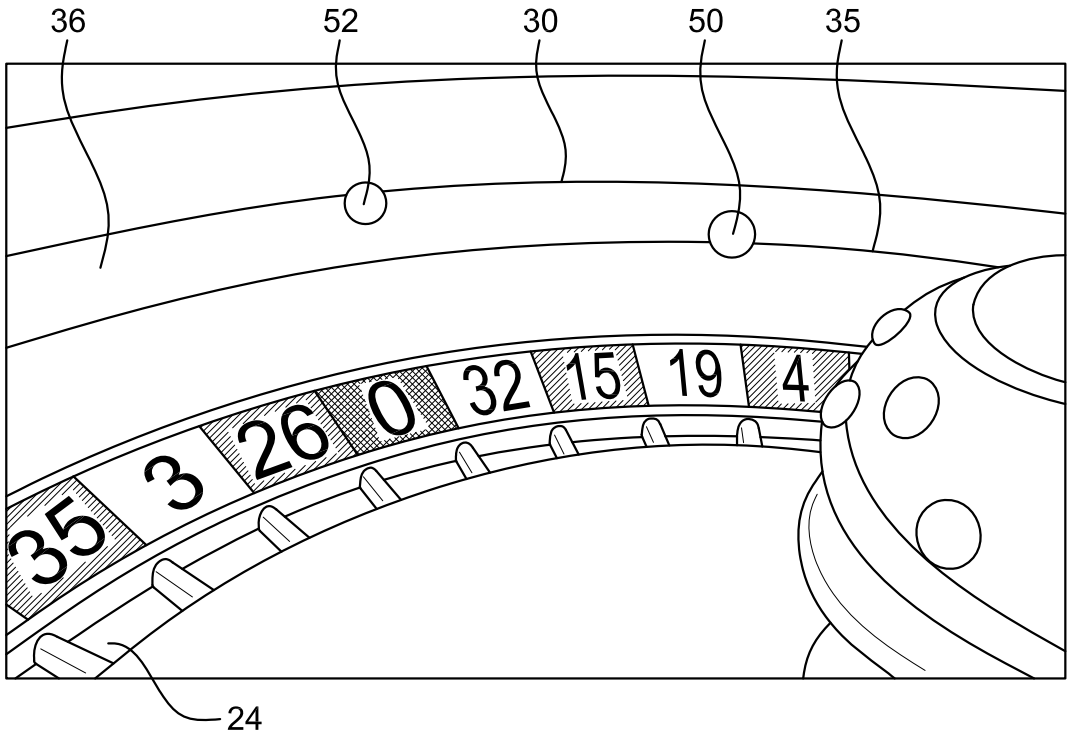

FIG. 6

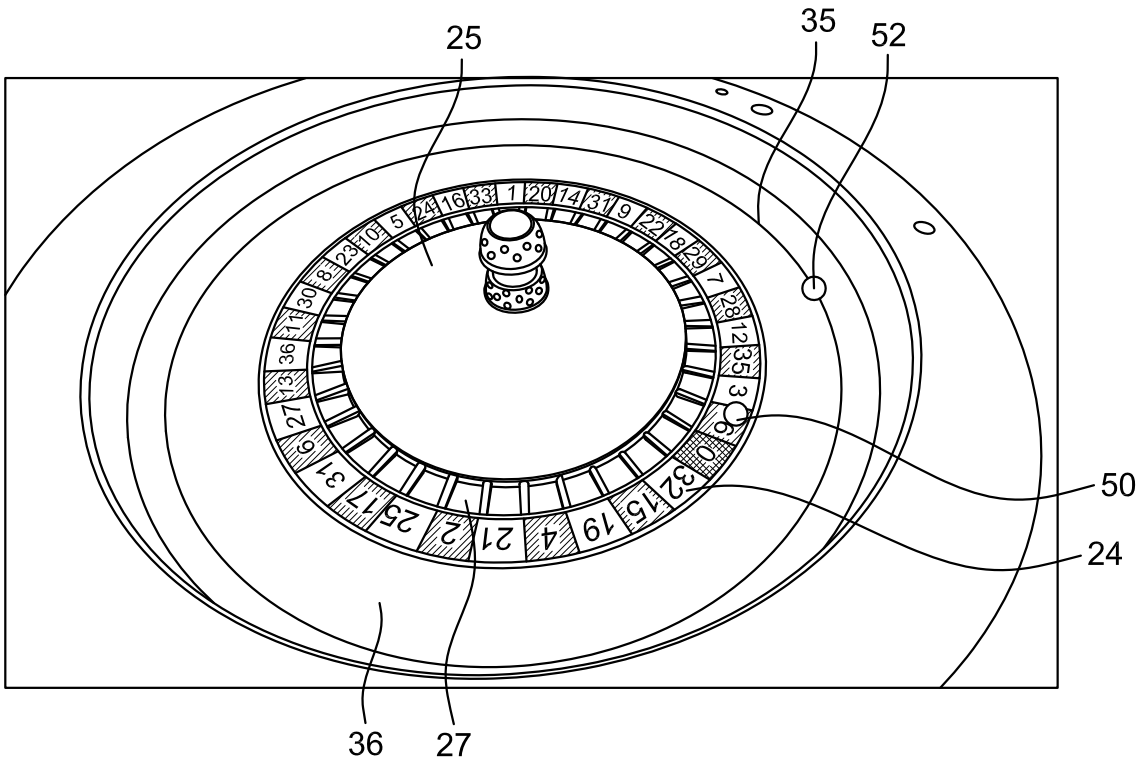

FIG. 7

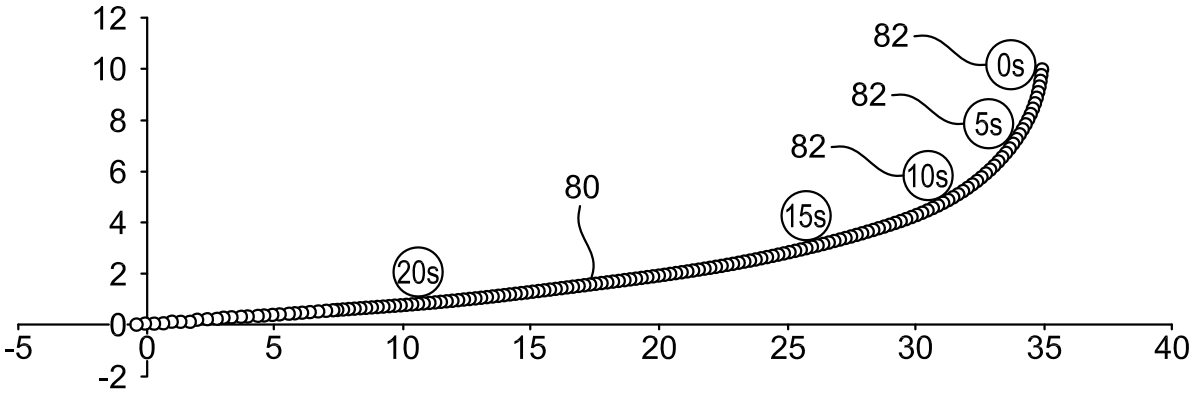
12
10
8
6
4
2
0
-2
-5
0
5
10
15
20
25
30
35
40
82
0s
82
5s
82
10s
80
15s
20s

FIG. 8

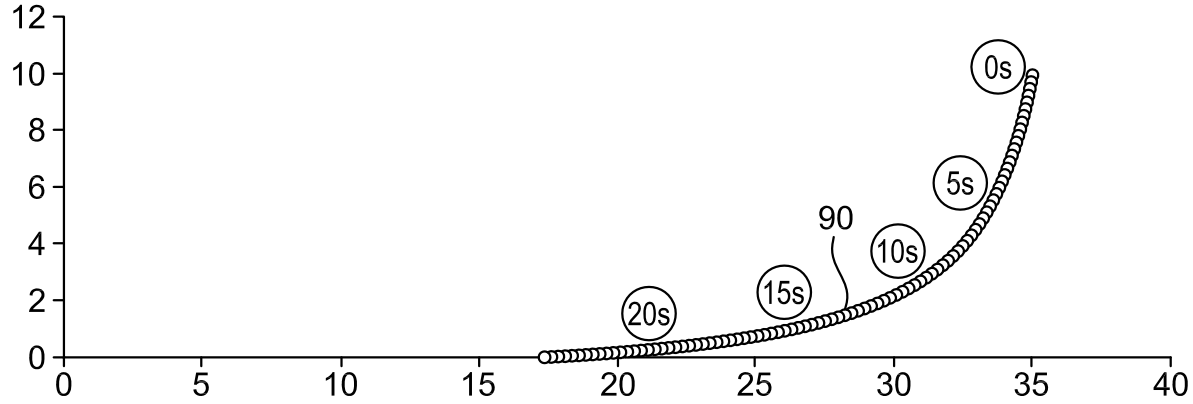
12
10
8
6
4
2
0
0
5
10
15
20
25
30
35
40
0s
5s
90
10s
15s
20s

FIG. 9

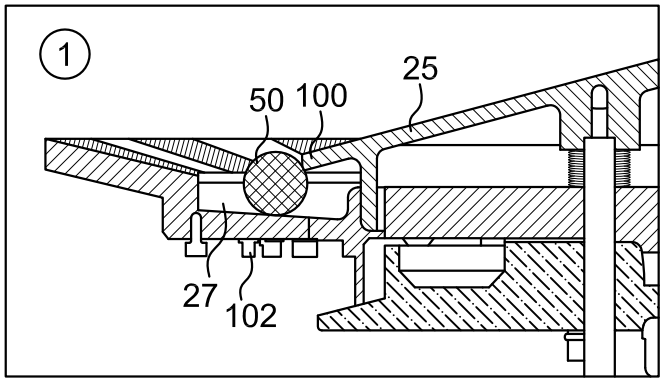

FIG. 10A

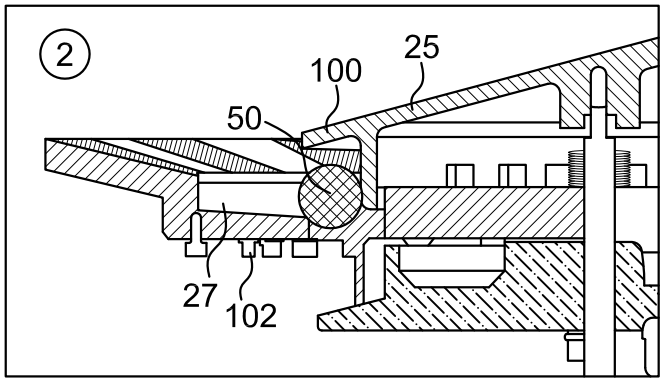

FIG. 10B

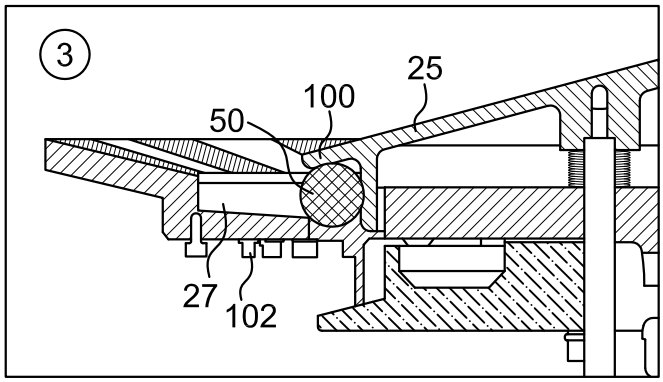

FIG. 10C

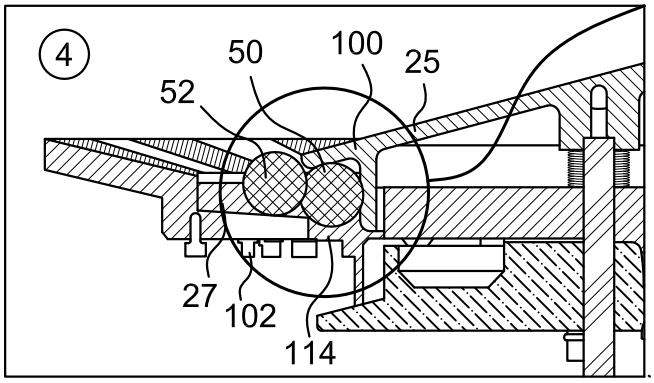

FIG. 11A

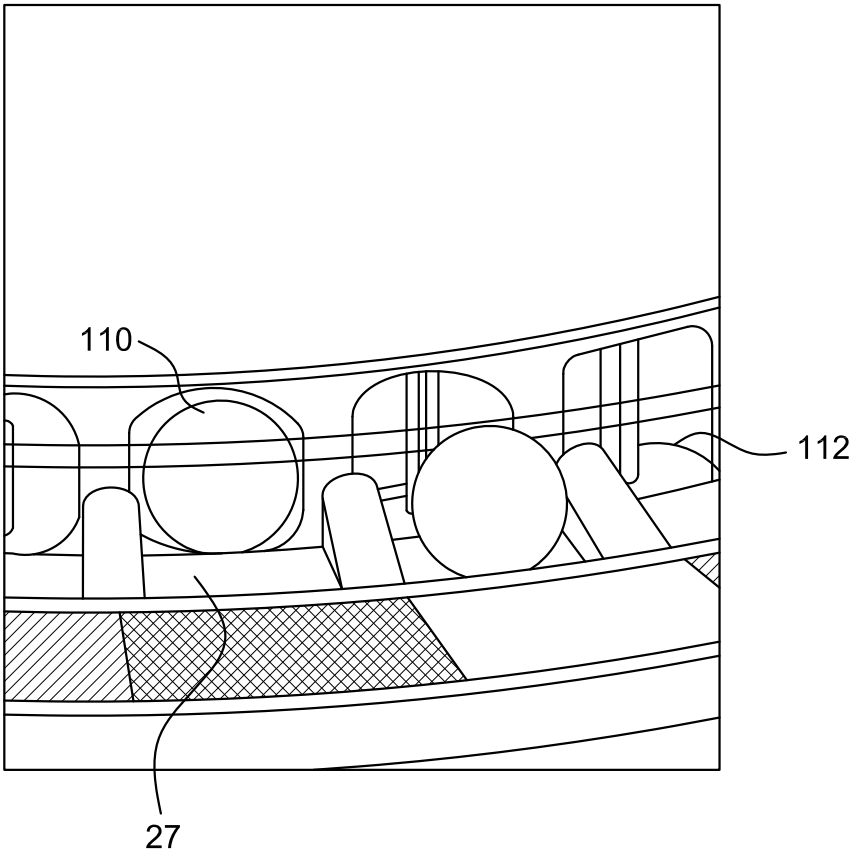

FIG. 11B

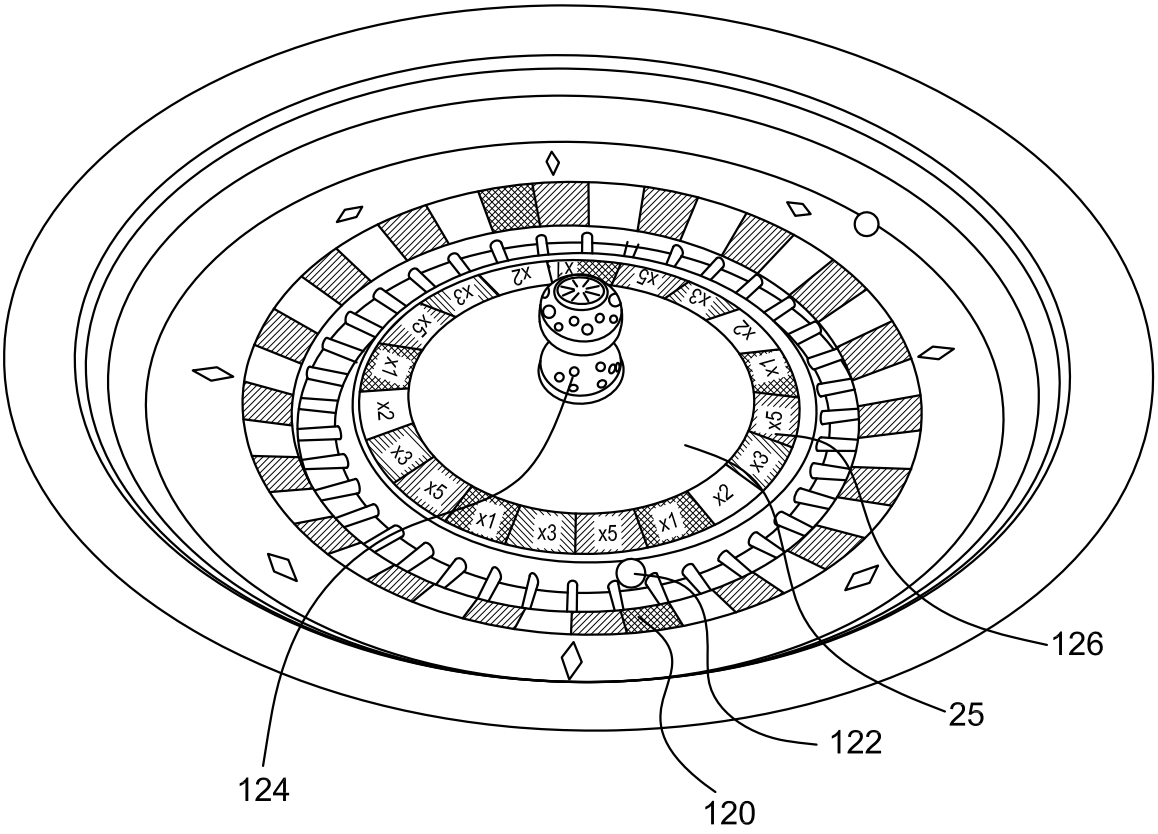
x1
x3
x5
x2
x1
x3
x5
x2
x1
x3
x5
x2
x1
x3
x5
x2
x1
x3
x5
x2
126
25
122
120
124

FIG. 12

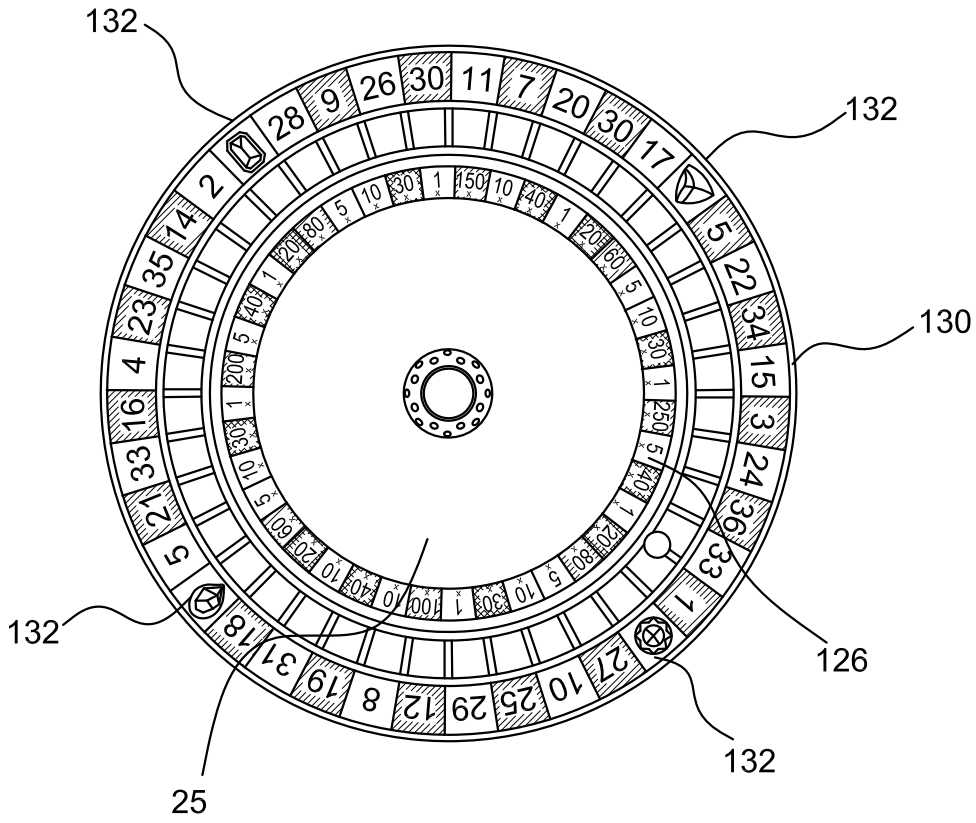
132
132
130
132
126
132
25
28
9
26
30
11
7
20
30
17
5
22
34
15
3
24
36
33
1
27
10
25
29
12
8
19
31
18
5
21
33
16
4
23
35
14
2

FIG. 13

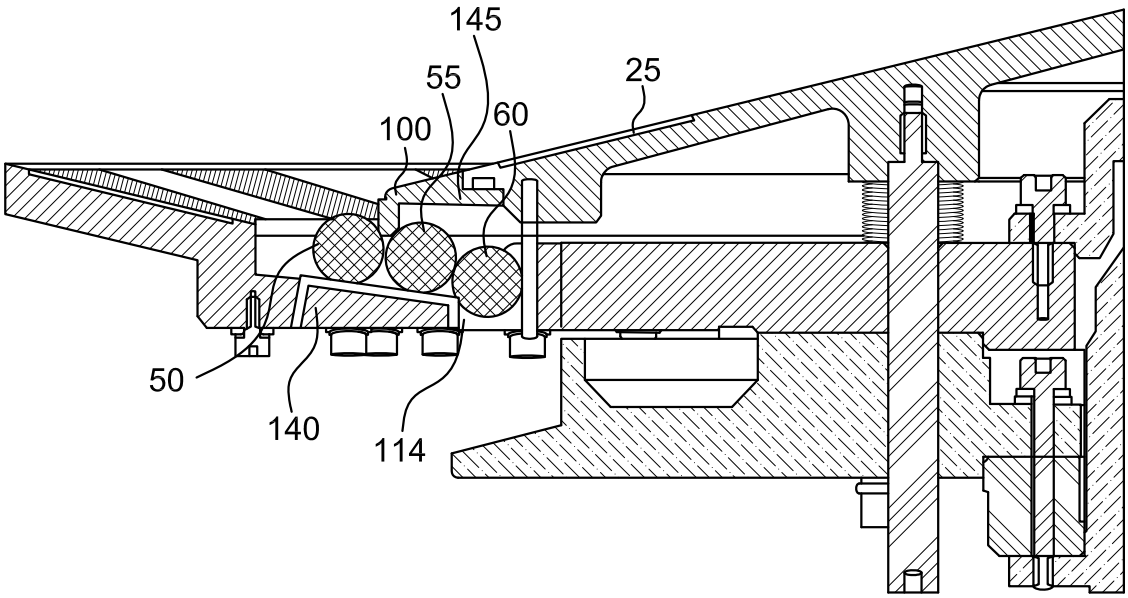

FIG. 14

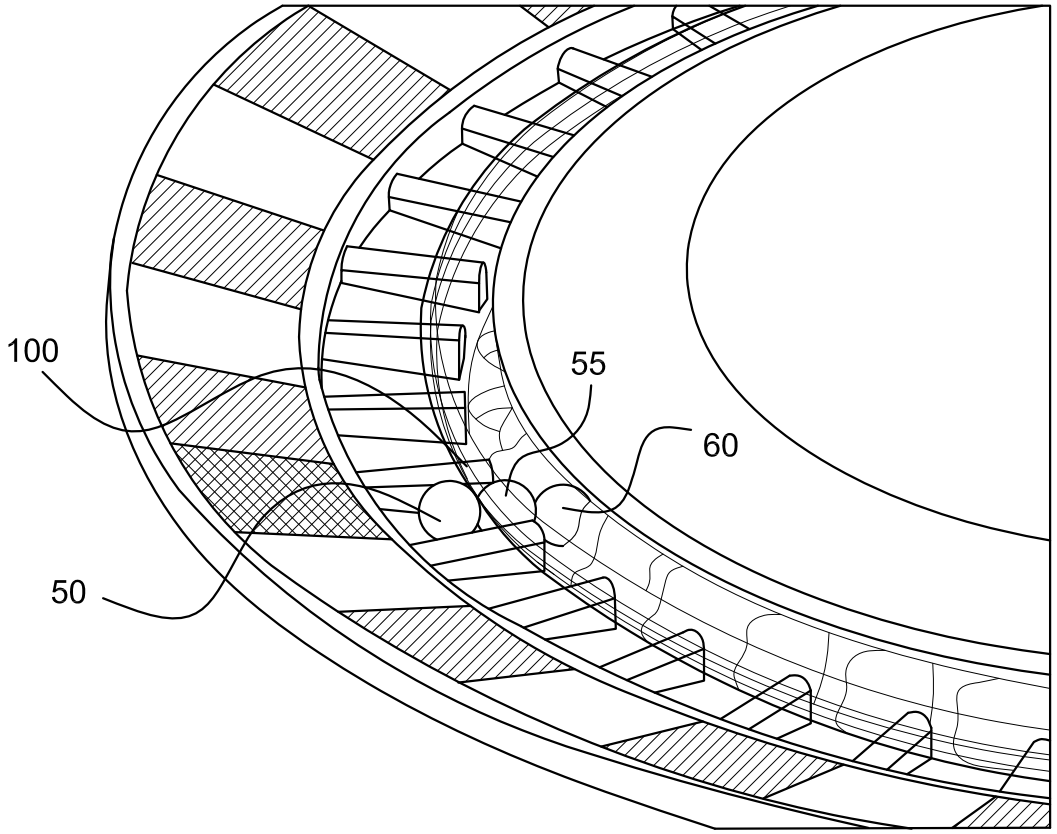

FIG. 15

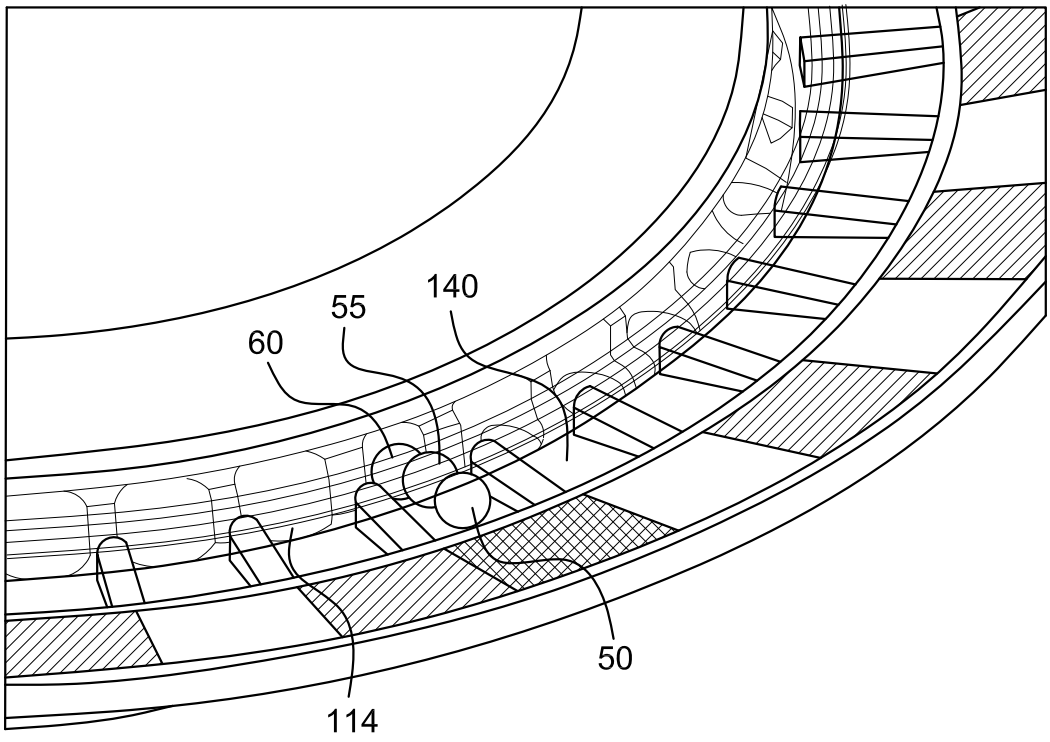

FIG. 16

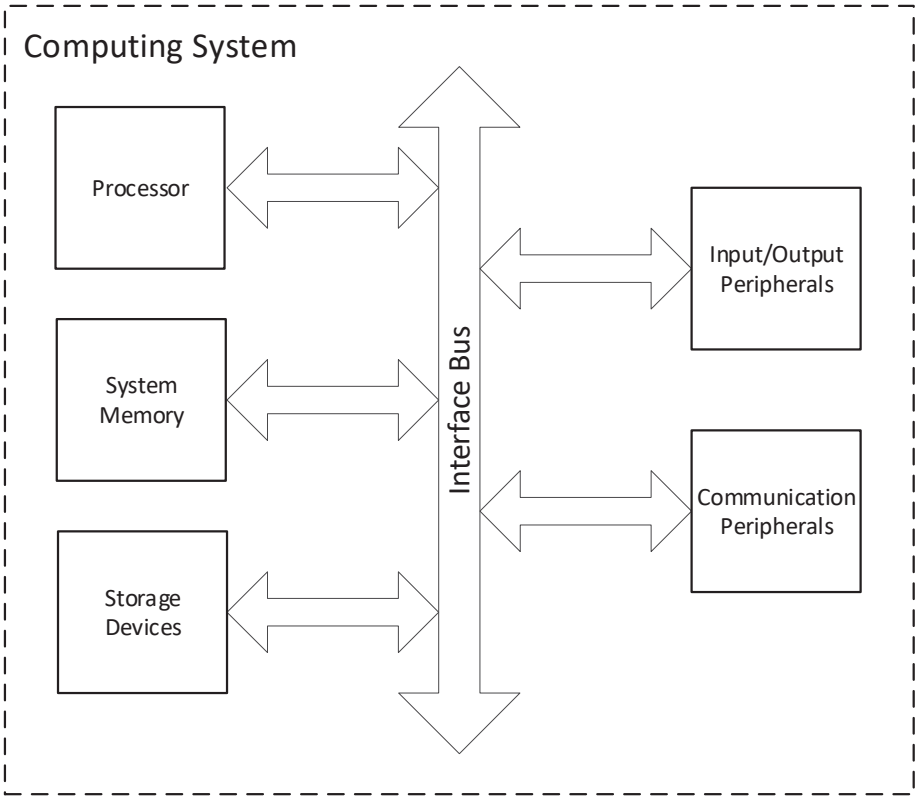
Computing System
Processor
System Memory
Storage Devices
Interface Bus
Input/Output Peripherals
Communication Peripherals

FIG. 17