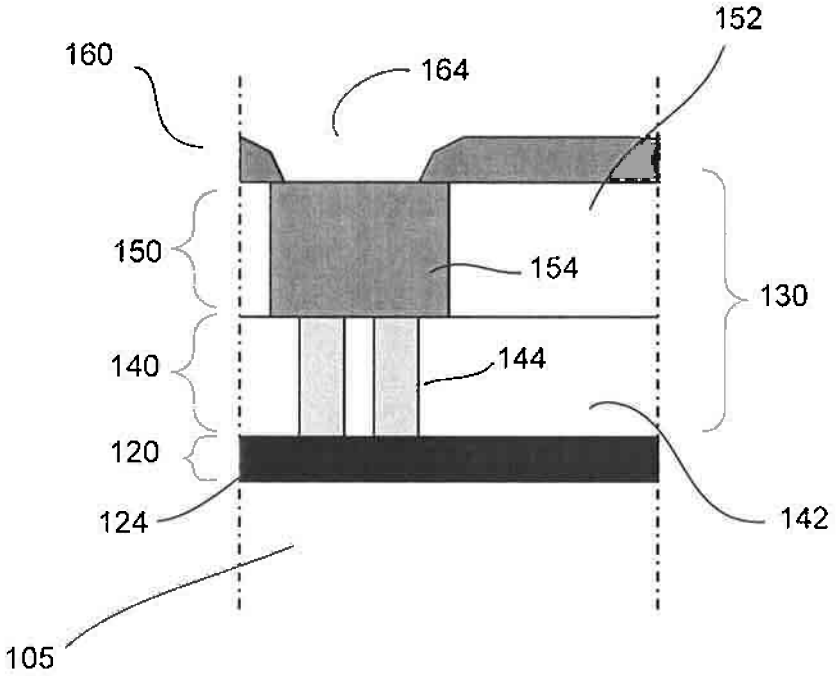

Fig. 1

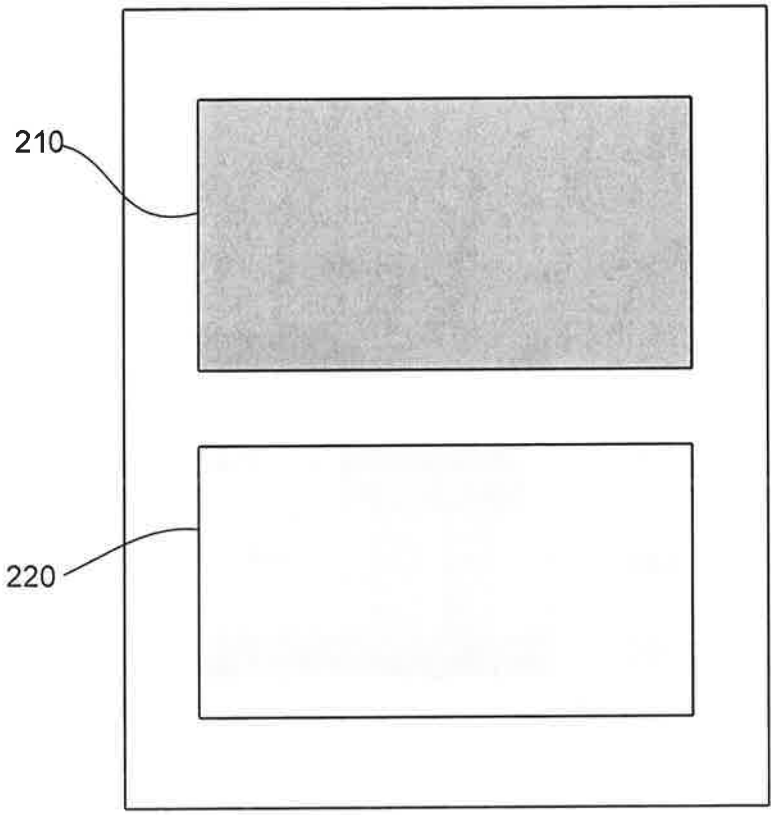

Fig. 2a

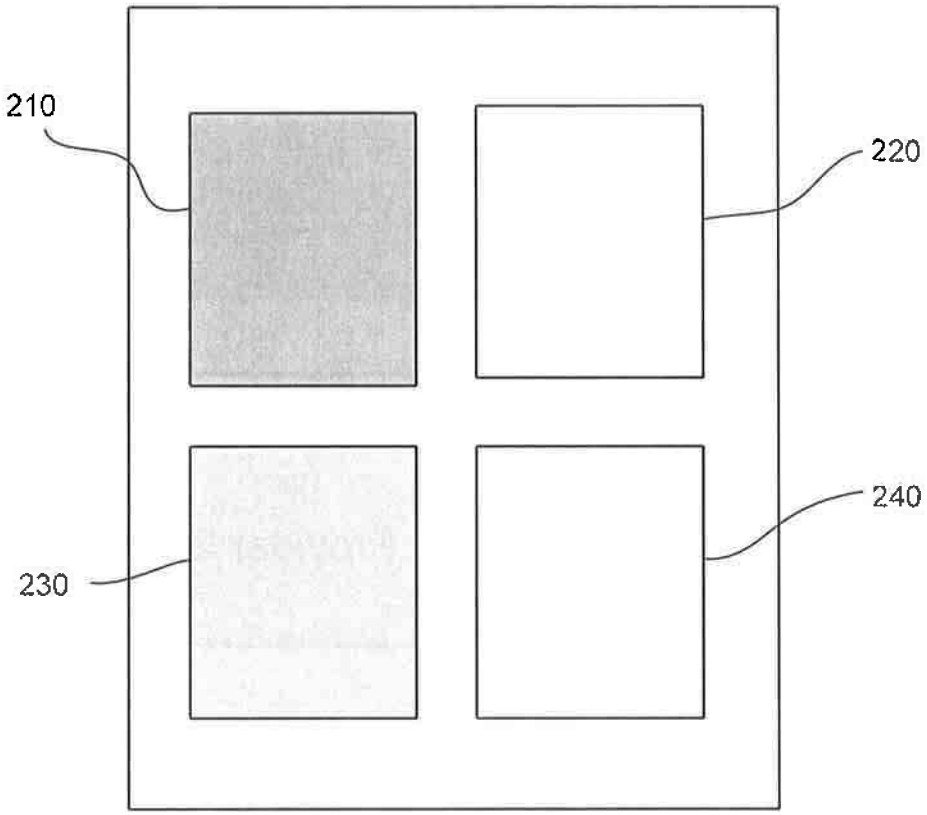

Fig. 2b

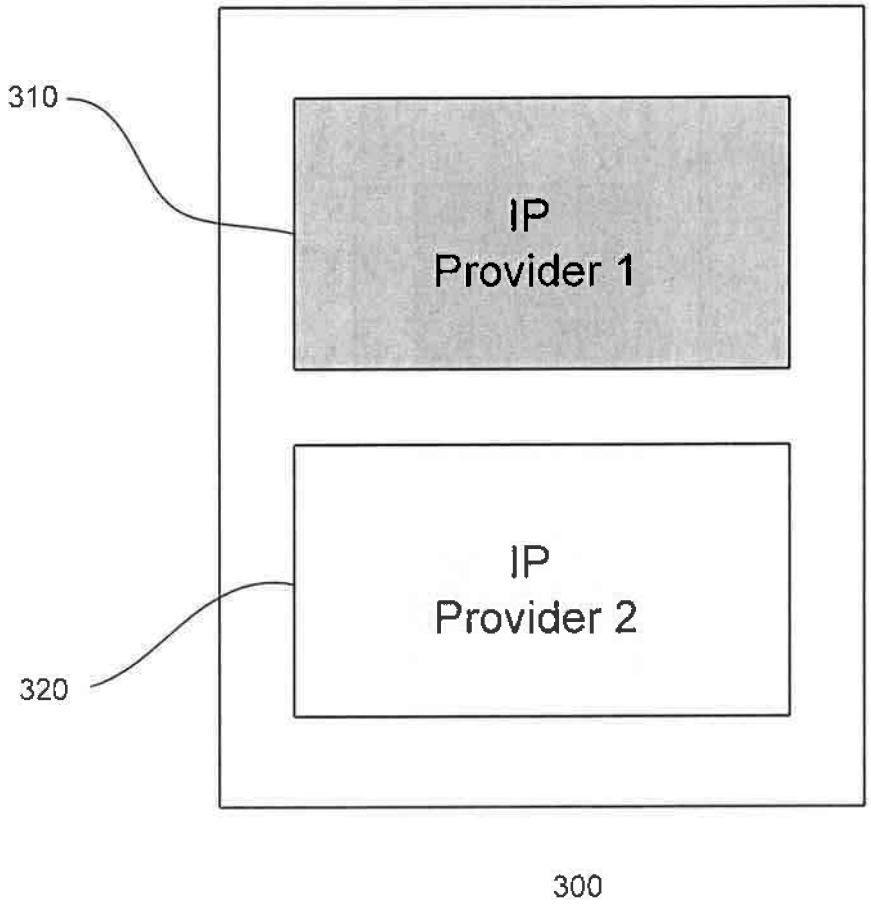

Fig. 3a

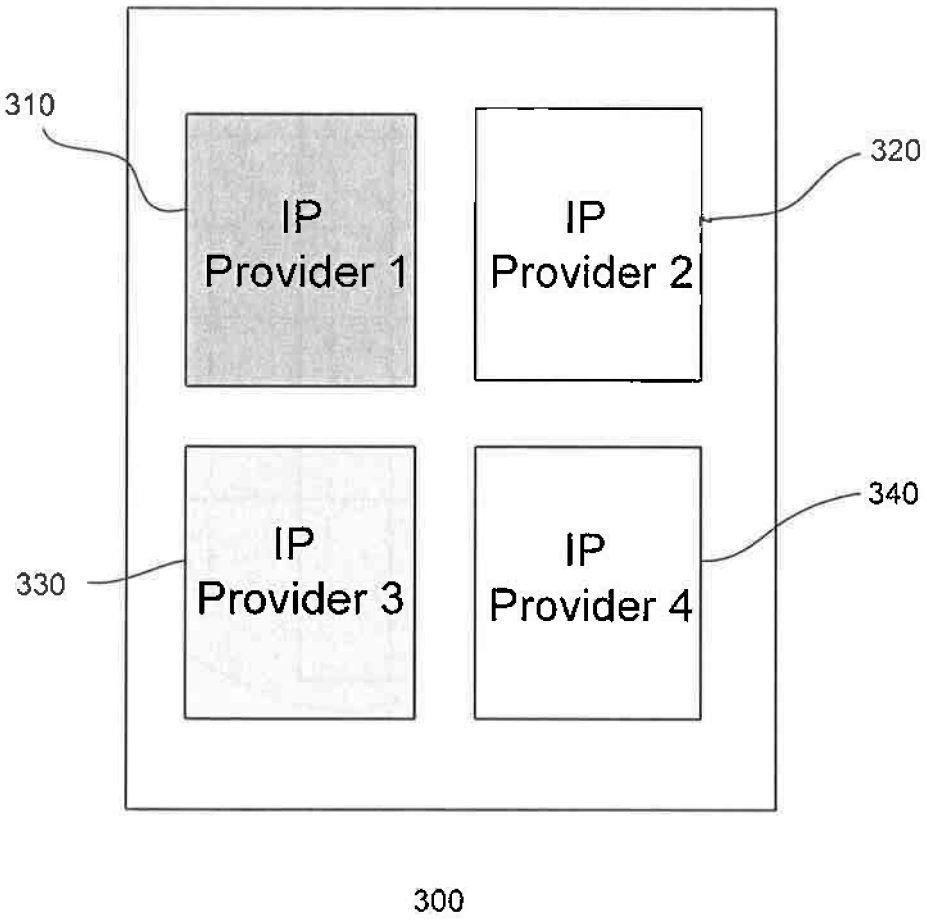
310
IP
Provider 1
320
IP
Provider 2
330
IP
Provider 3
340
IP
Provider 4
300

Fig. 3b

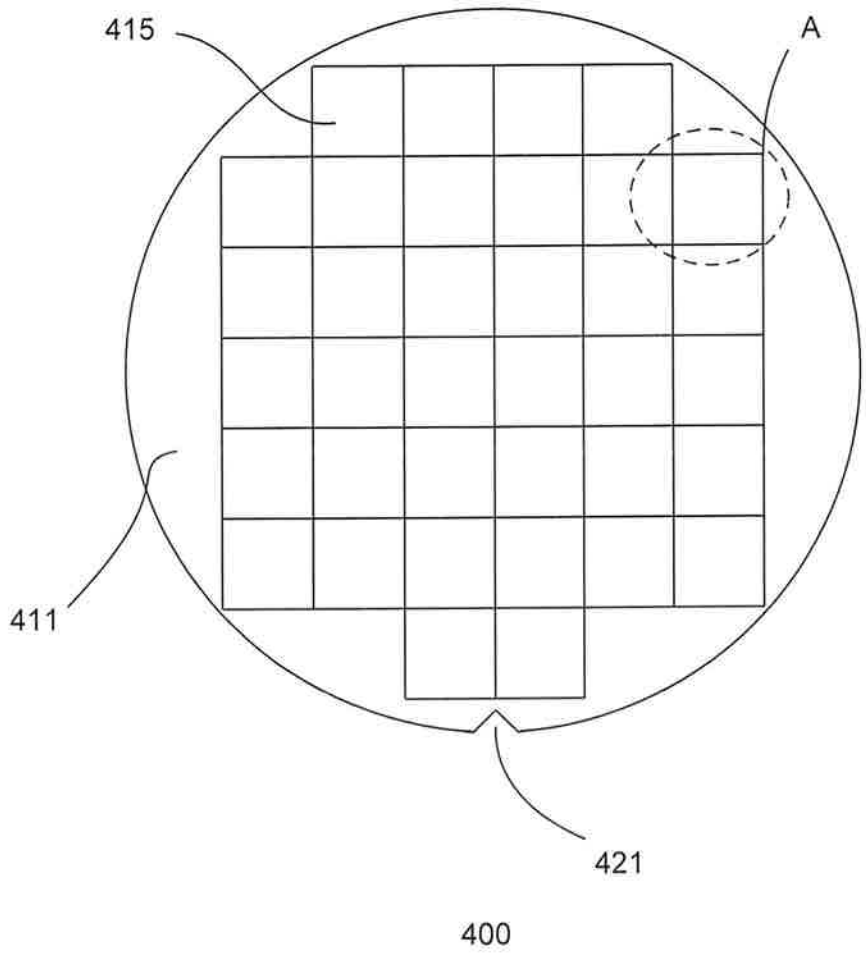

Fig. 4a

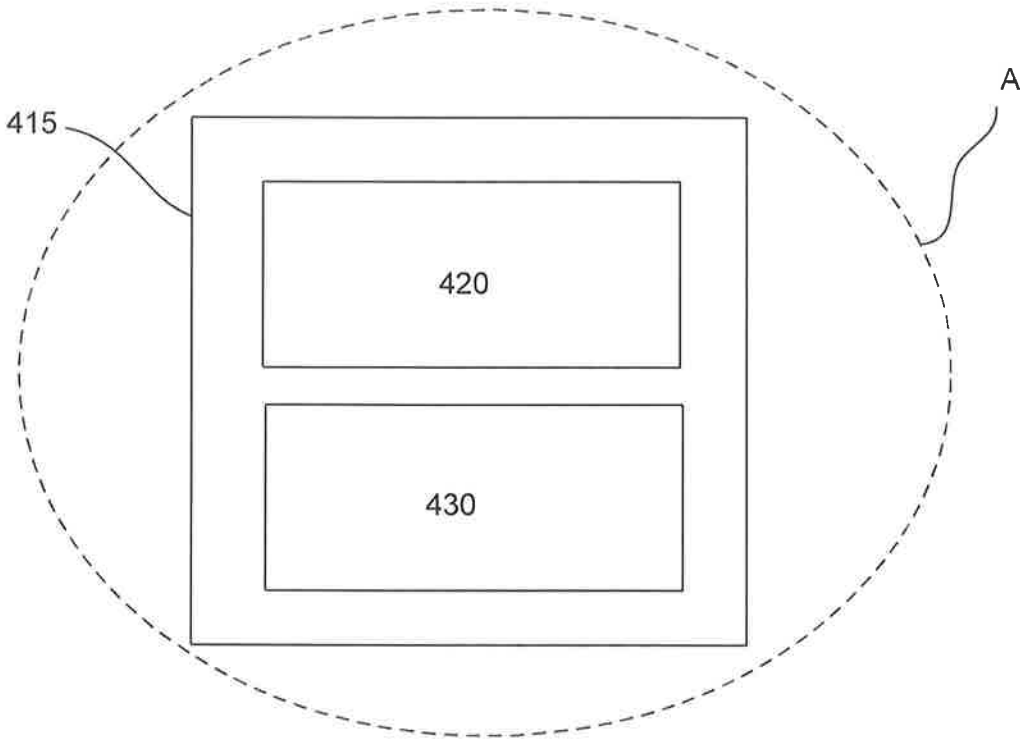

Fig. 4b

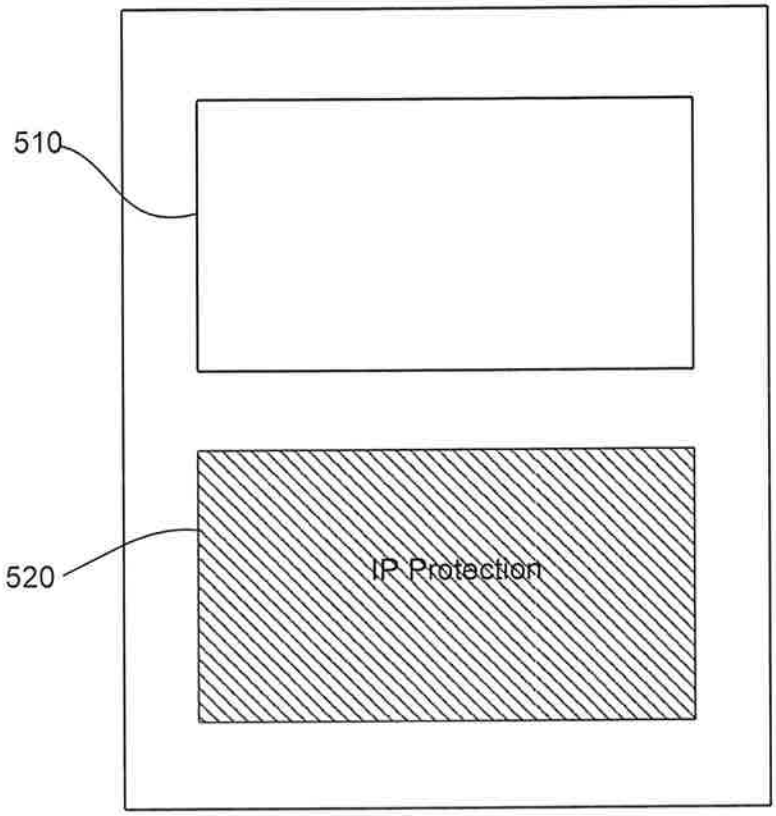

Fig. 5a

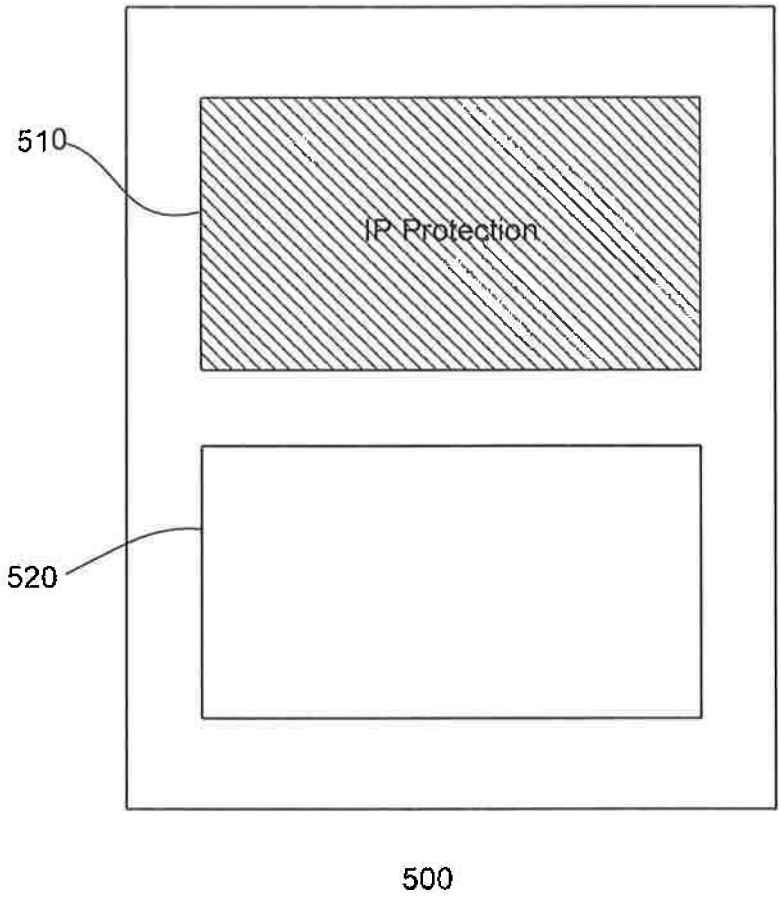

Fig. 5b

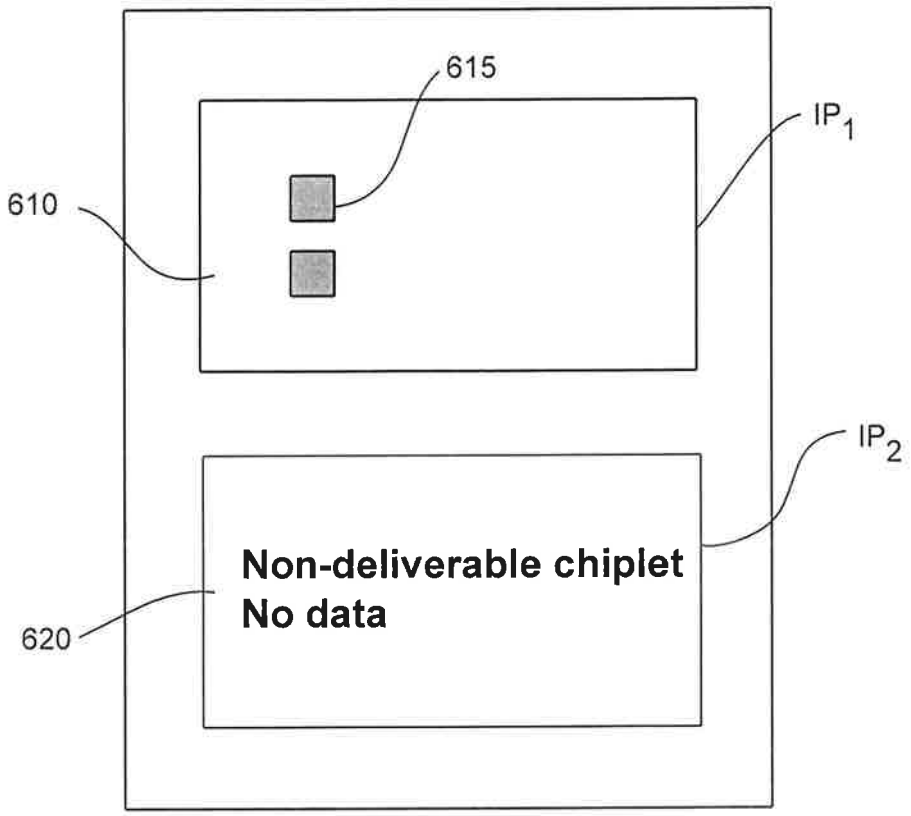

Fig. 6a

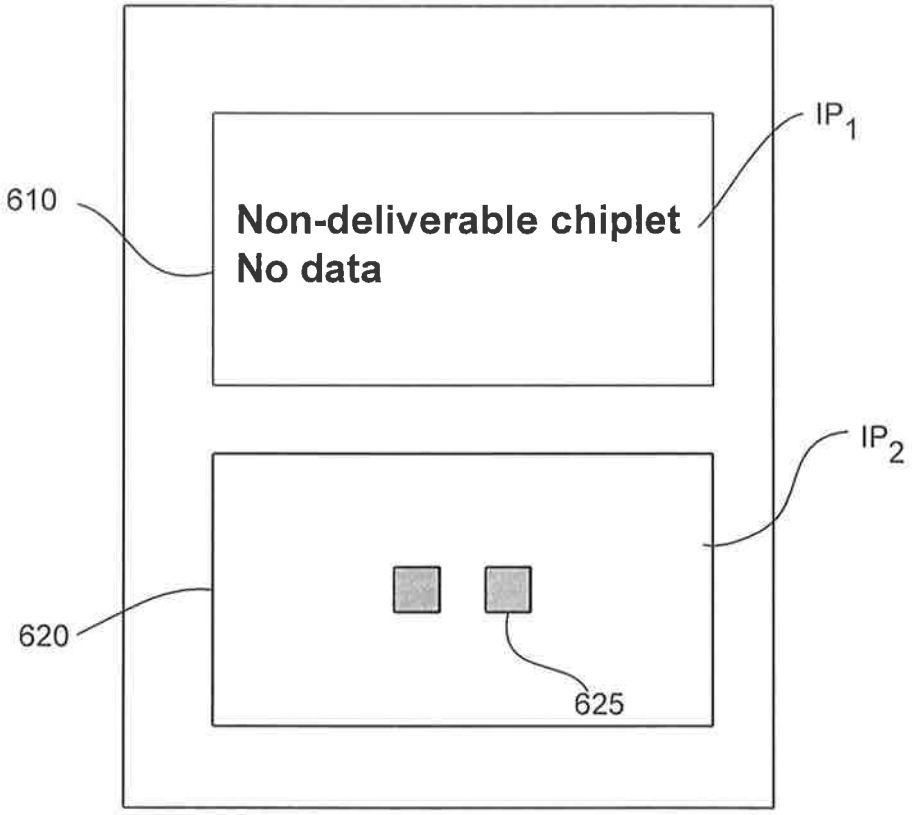

Fig. 6b

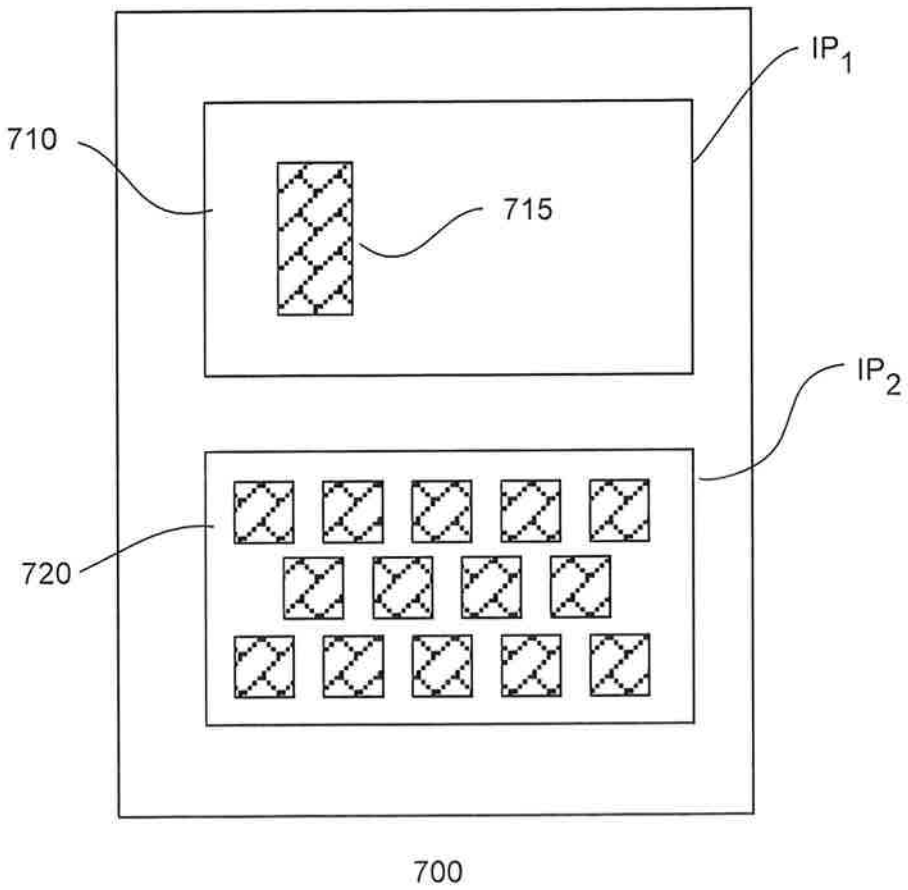

Fig. 7a

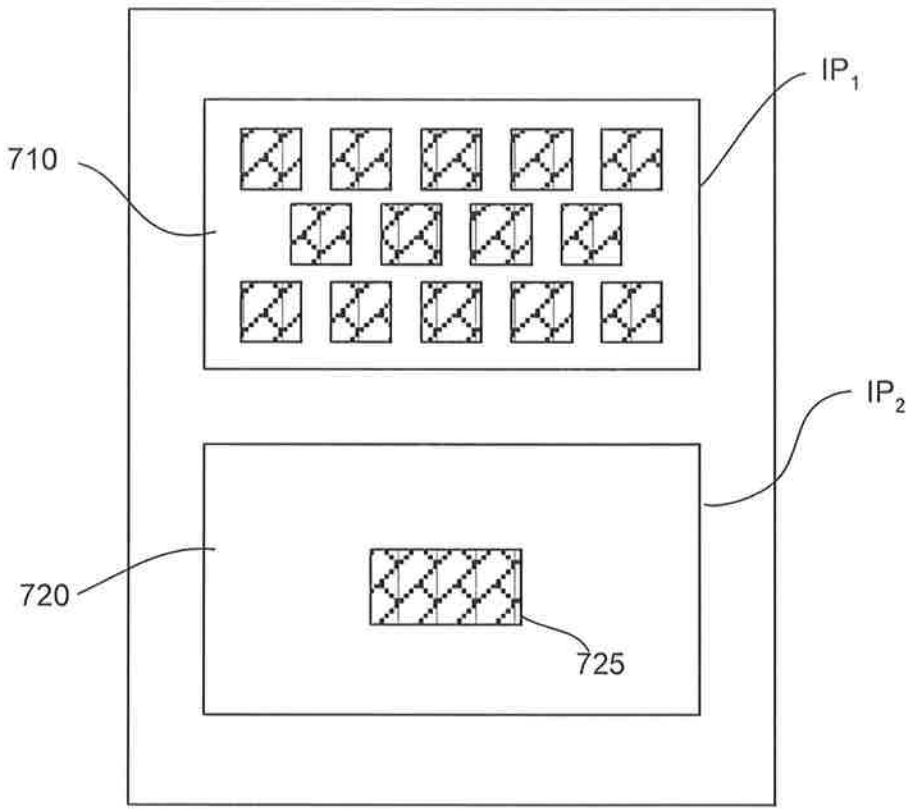

Fig. 7b

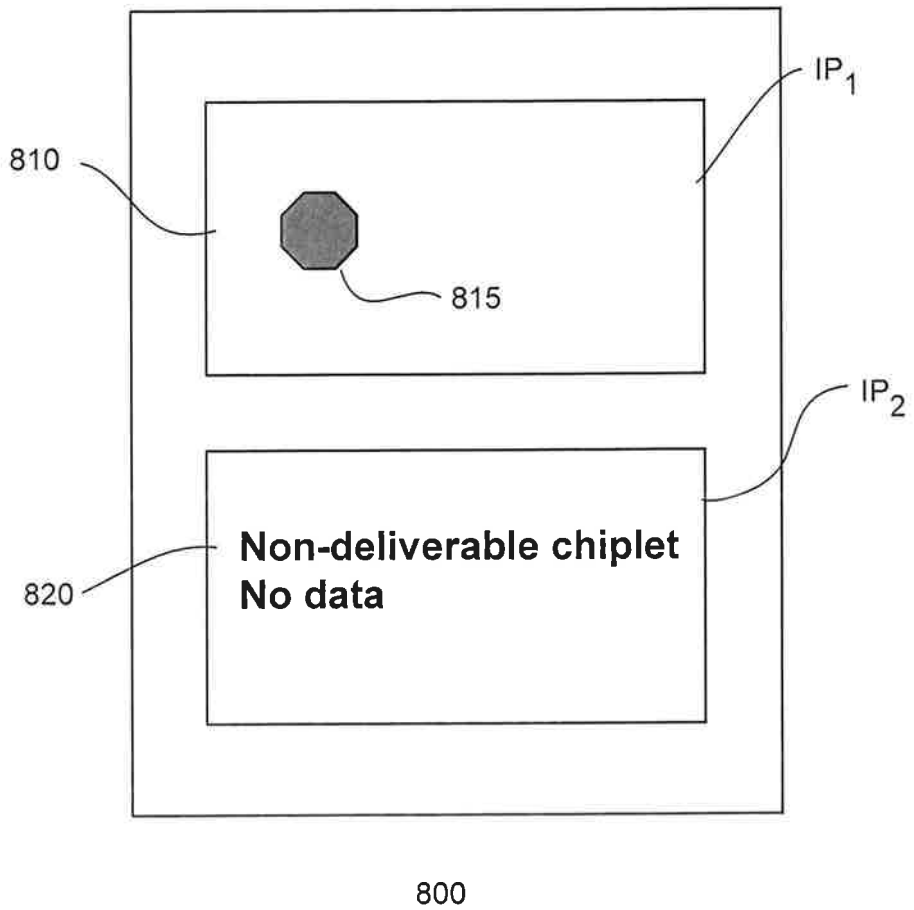

Fig. 8a

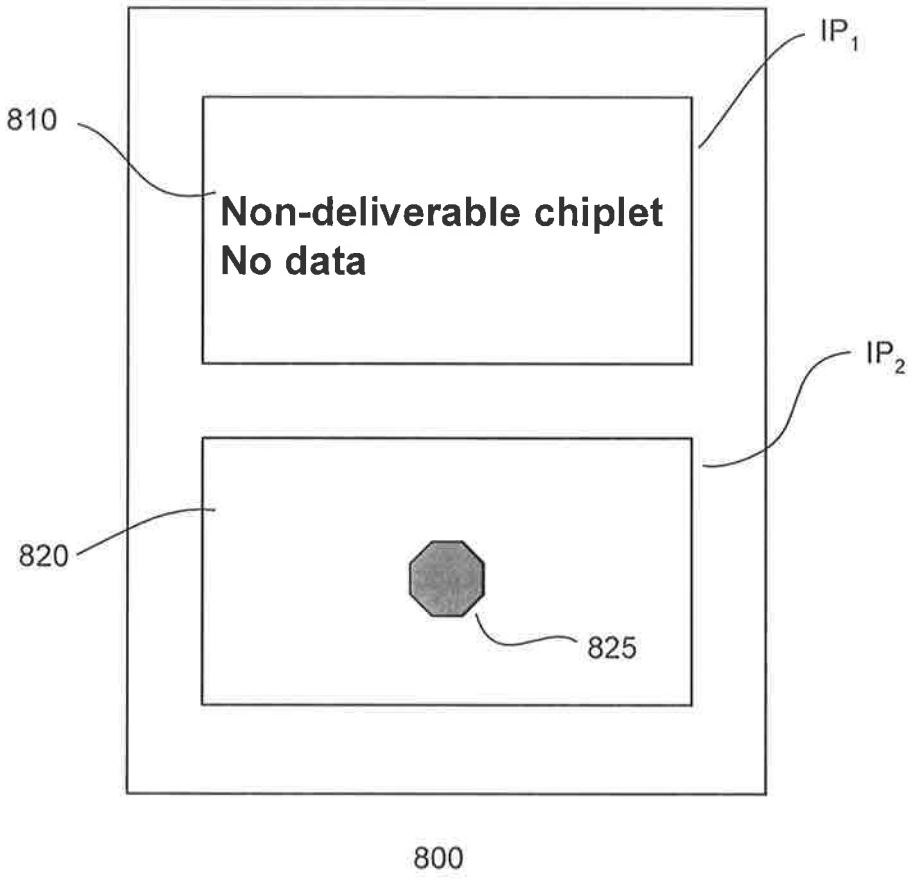

Fig. 8b

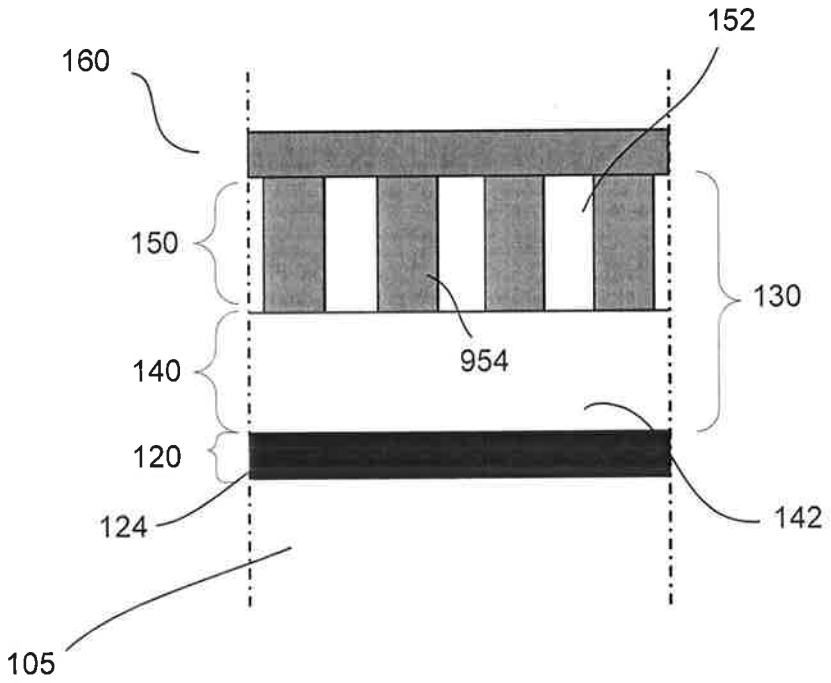

Fig. 9

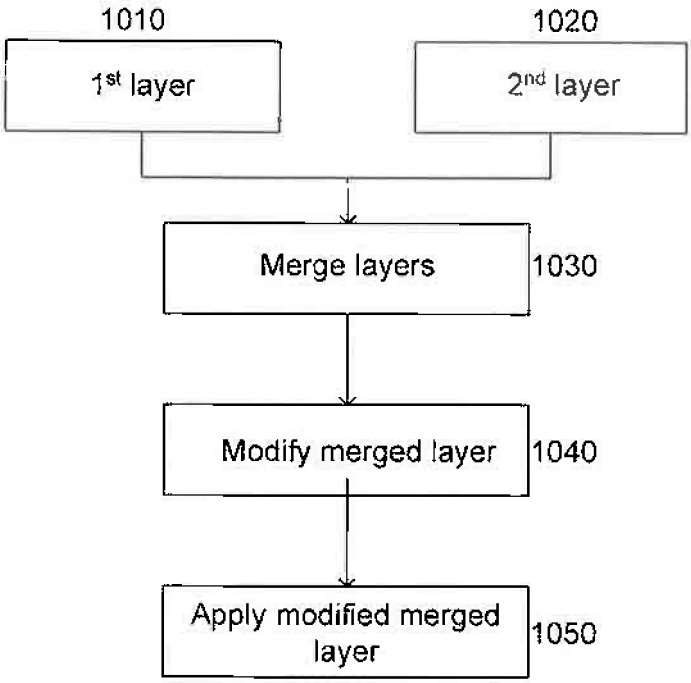
1010
1st layer
1020
2nd layer
Merge layers
1030
Modify merged layer
1040
Apply modified merged layer
1050
1000

Fig. 10

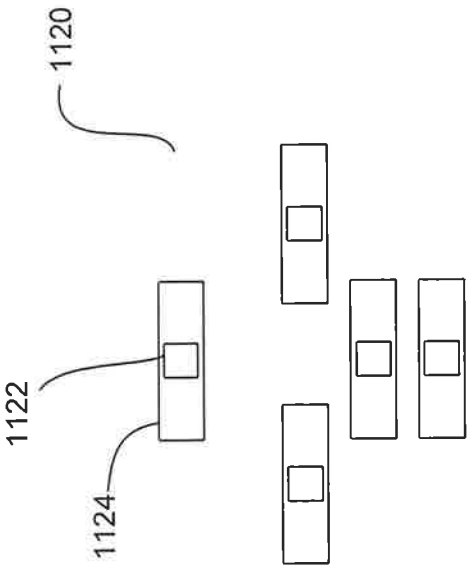

Fig. 11b

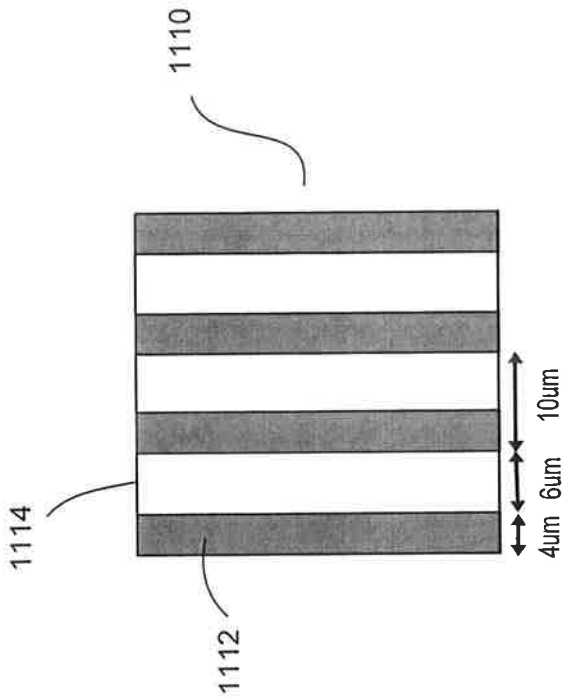

Fig. 11a

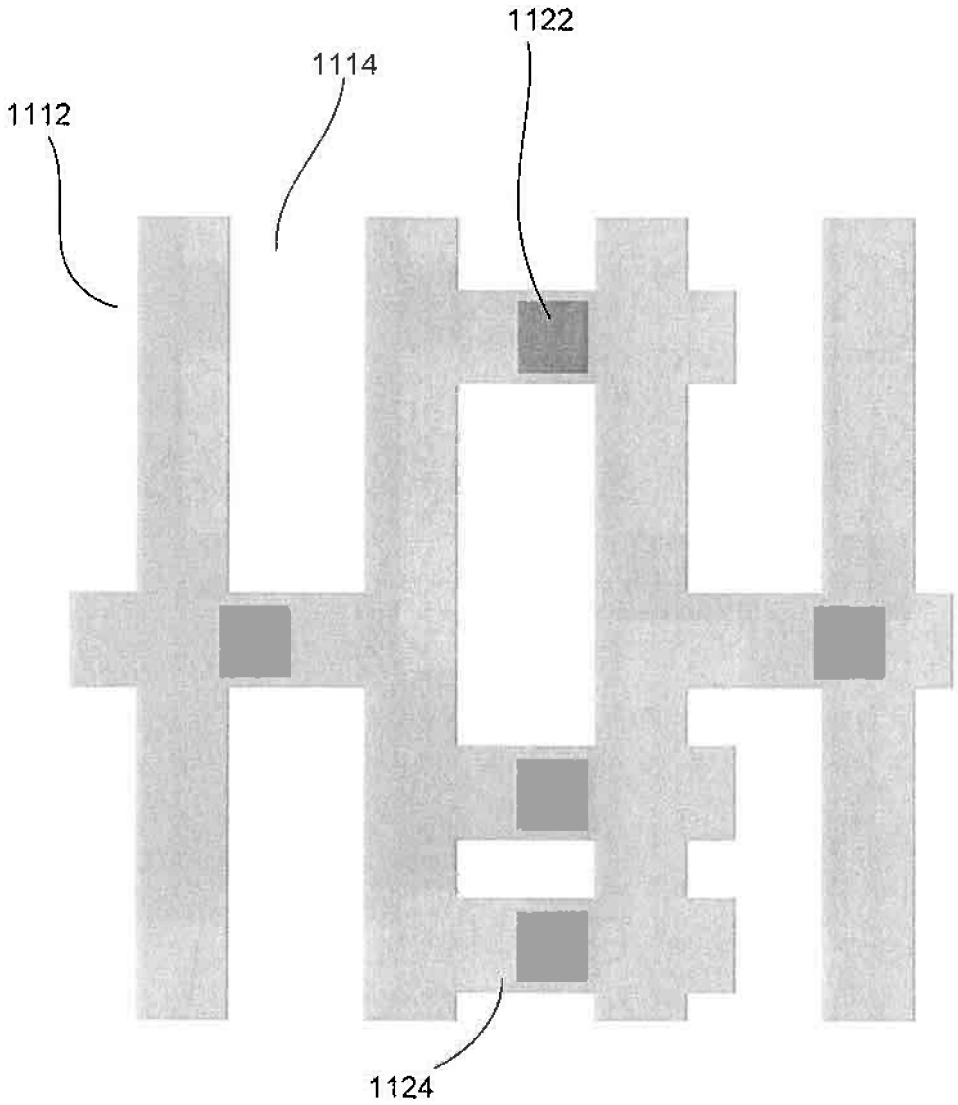

Fig. 11c

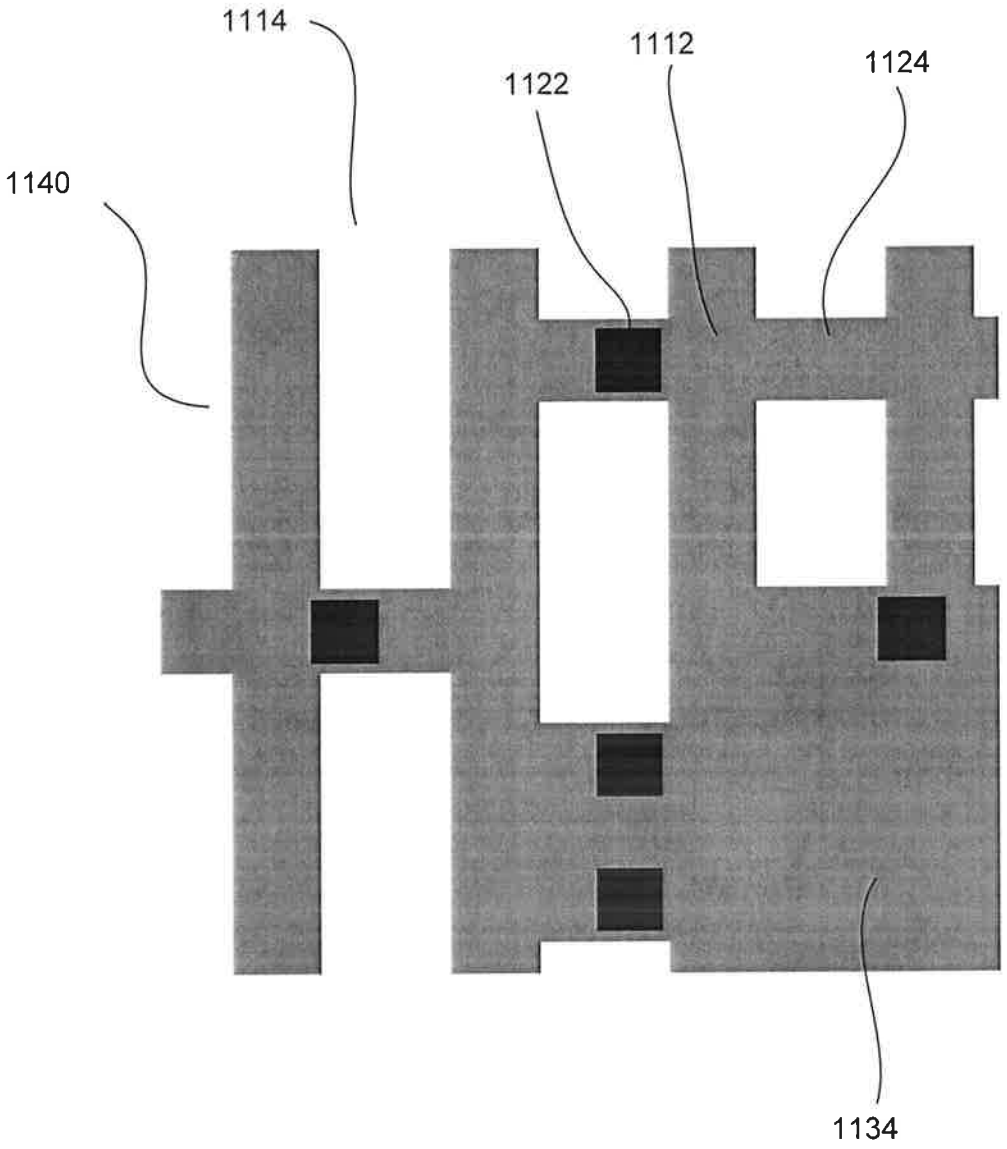

Fig. 11d

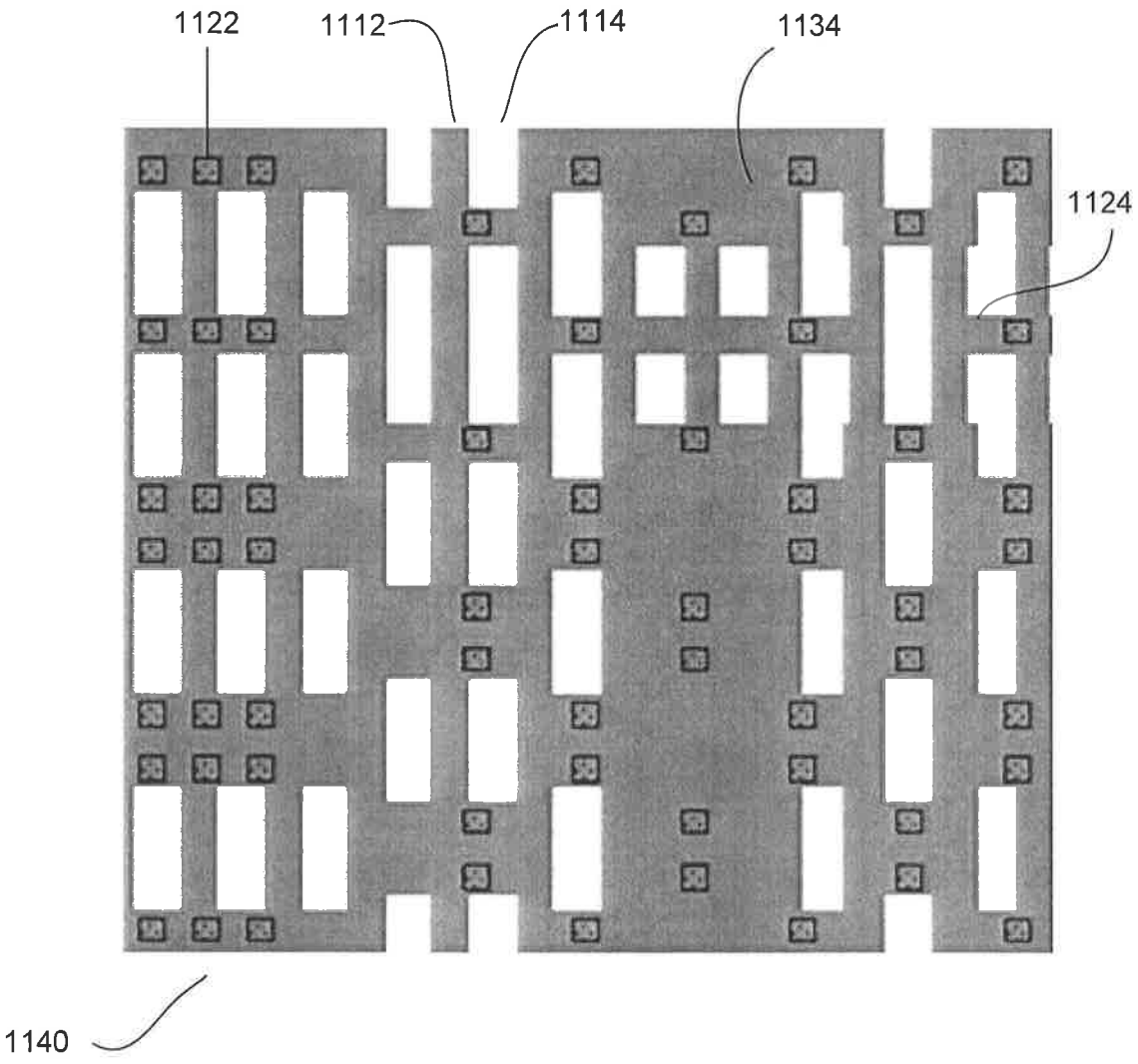

Fig. 11e

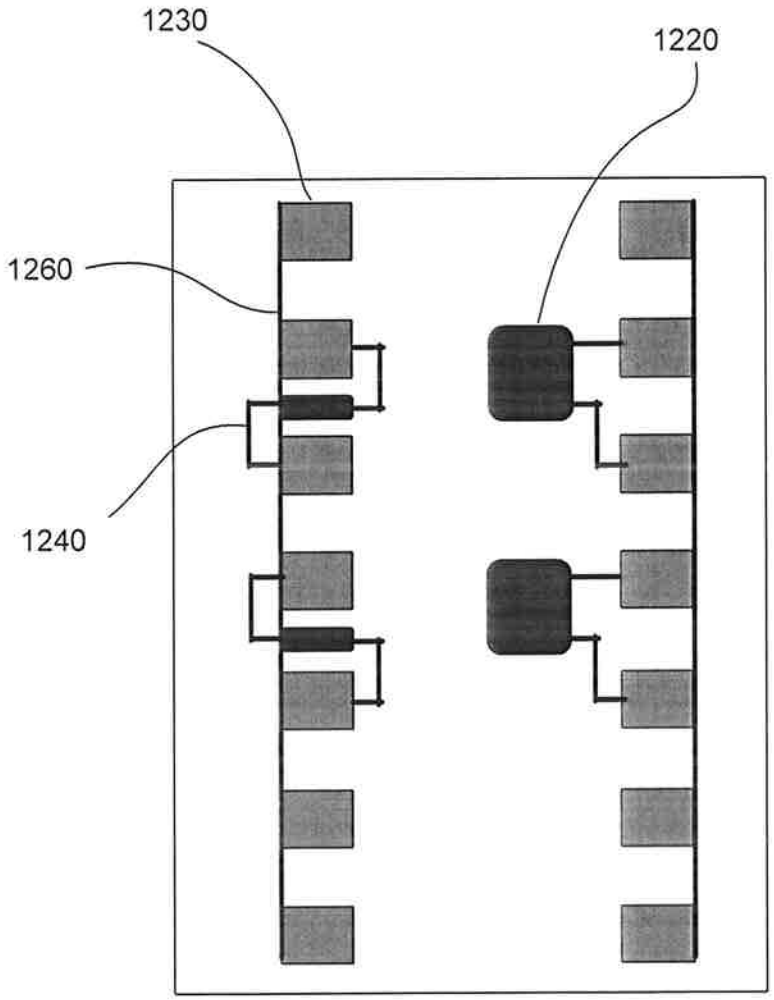

Fig. 12

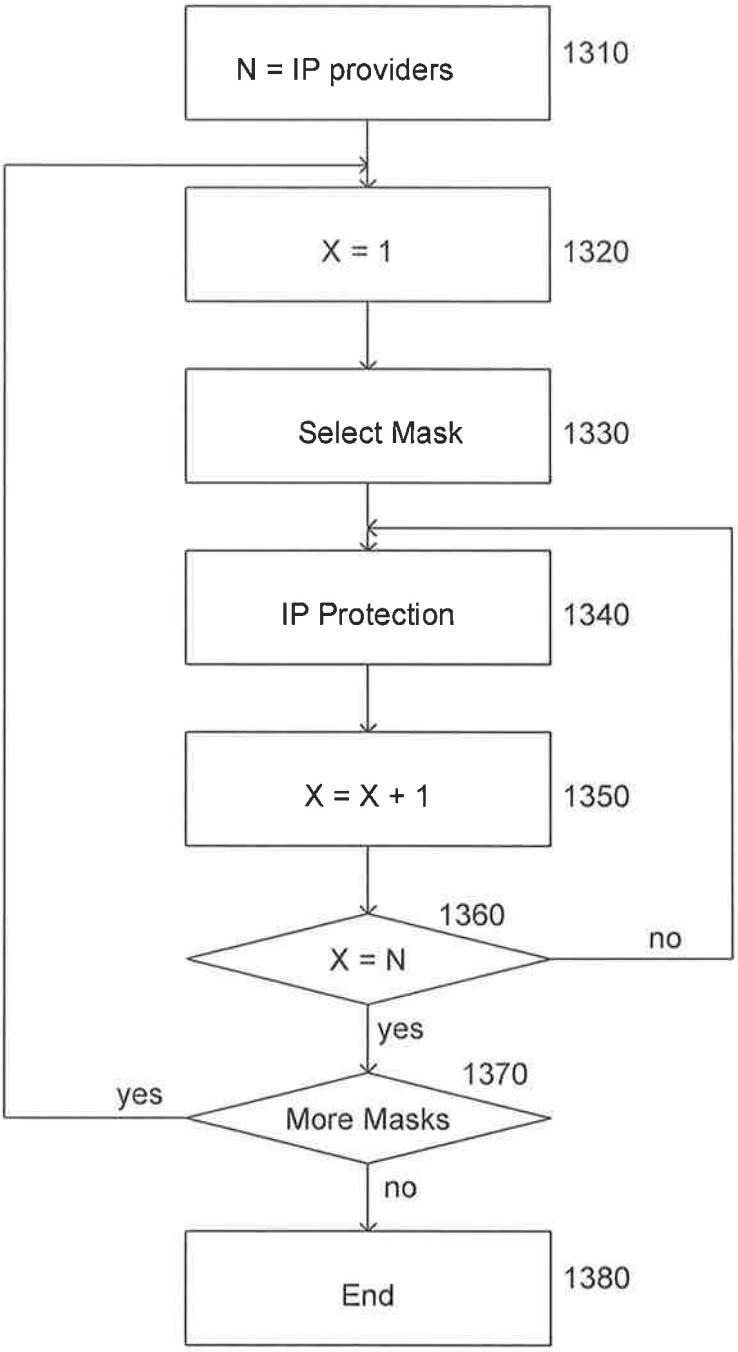
N = IP providers
1310
X = 1
1320
Select Mask
1330
IP Protection
1340
X = X + 1
1350
1360
X = N
no
yes
1370
yes
More Masks
no
End
1380

1300

Fig. 13

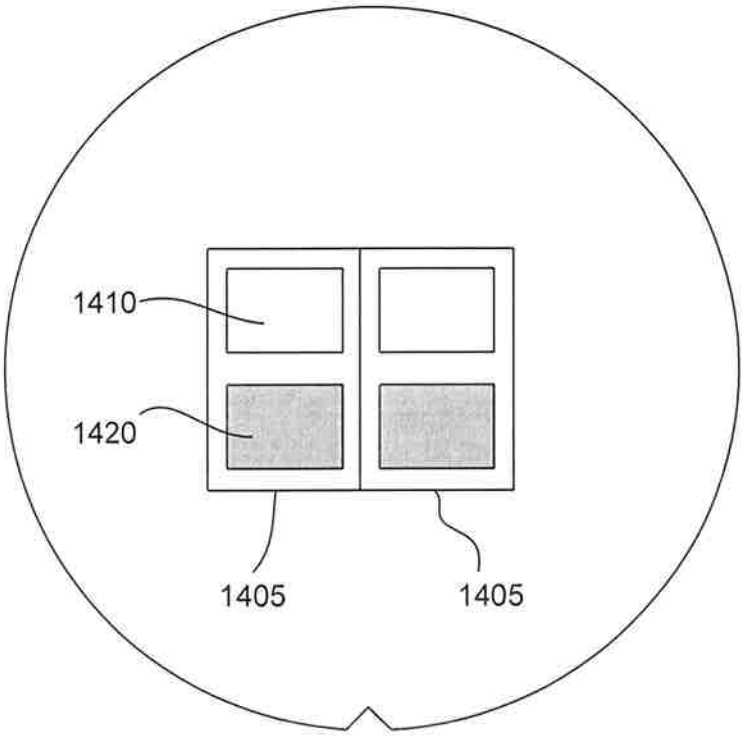

1400

Fig. 14a

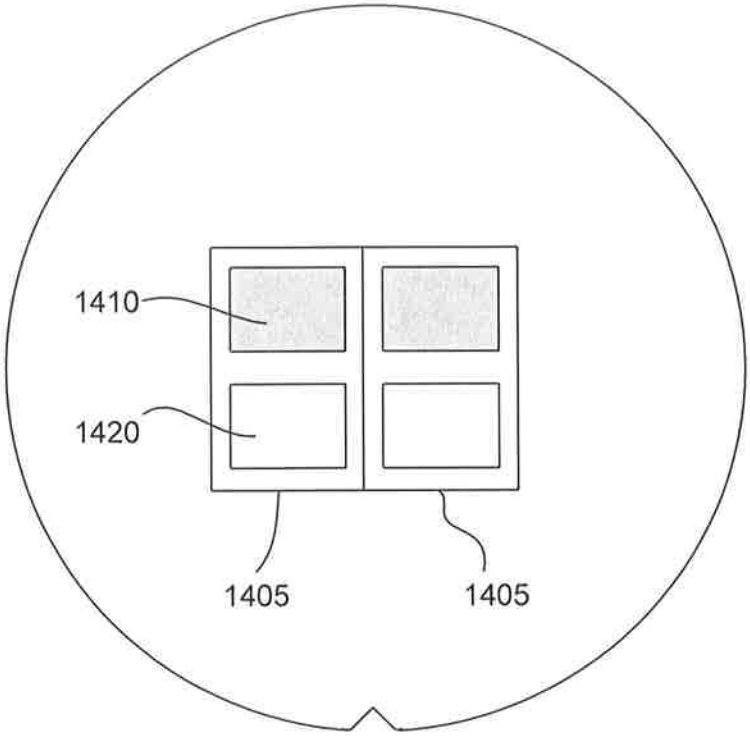

1400

Fig. 14b