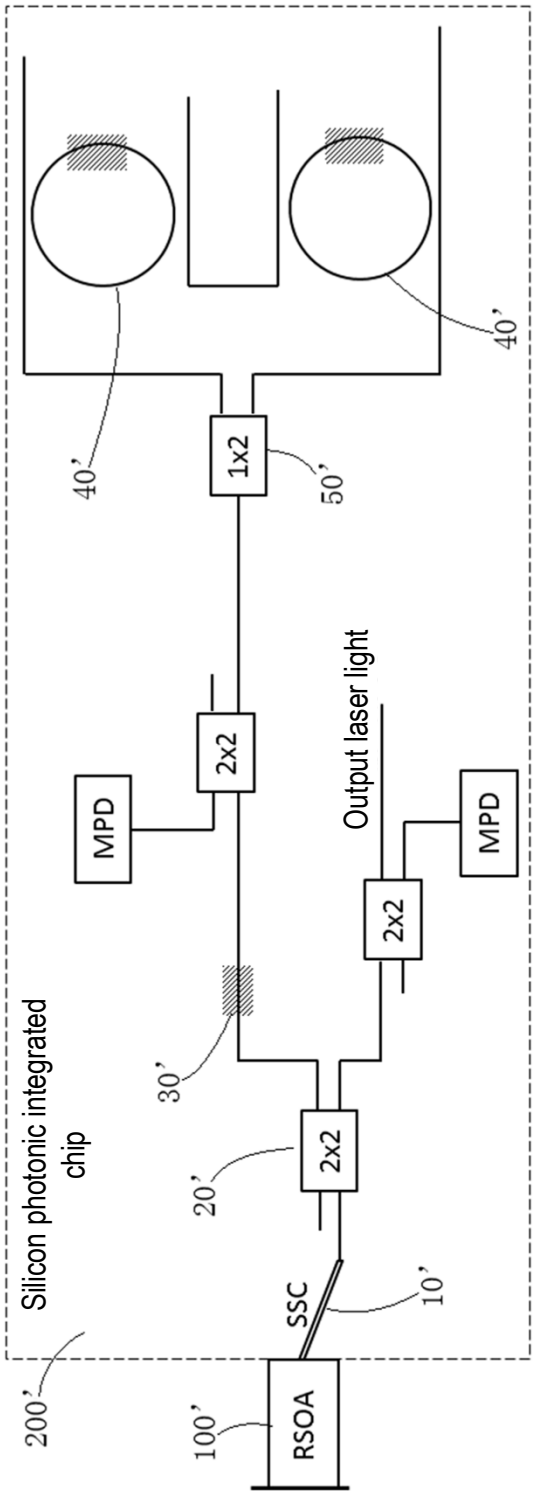
Silicon photonic integrated chip
200'
100'
RSOA
SSC
10'
20'
2x2
30'
2x2
MPD
Output laser light
2x2
MPD
1x2
50'
40'
40'

FIG. 1

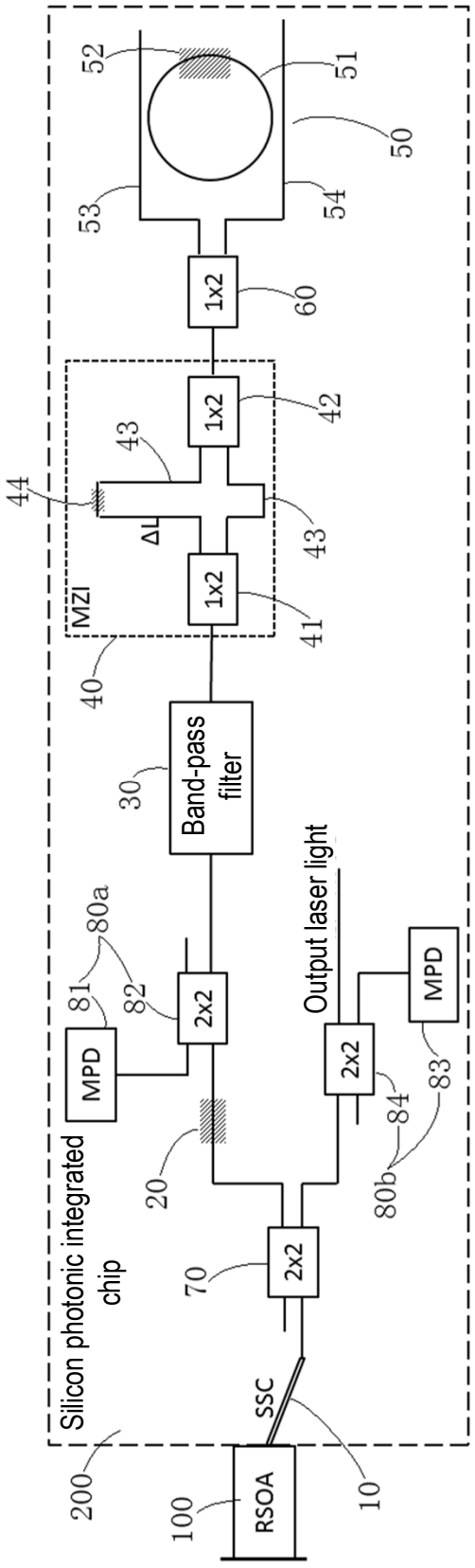
Silicon photonic integrated chip
200
RSOA
100
SSC
10
70
2x2
20
MPD
81
80a
82
2x2
Band-pass filter
30
MZI
40
1x2
41
ΔL
43
44
43
1x2
42
1x2
60
53
52
51
50
54
Output laser light
2x2
84
80b
83
MPD

FIG. 2

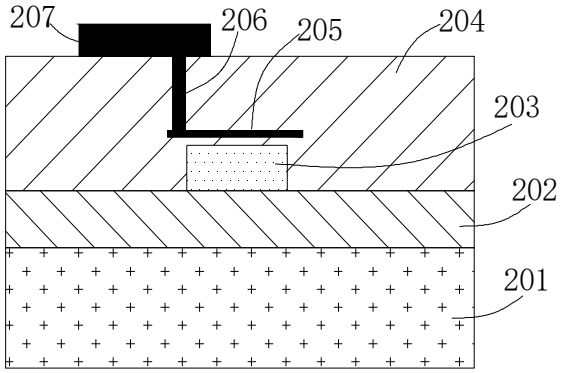

FIG. 3

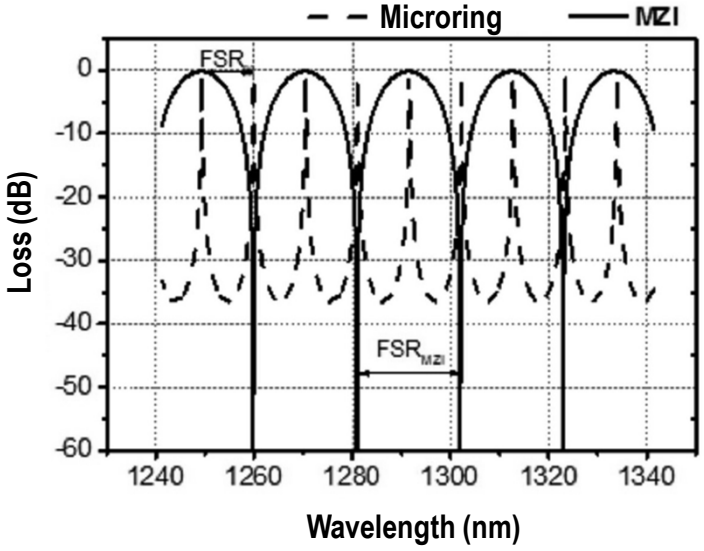
Microring
MZI
FSR
FSR$_{MZI}$
Loss (dB)
0
-10
-20
-30
-40
-50
-60
1240
1260
1280
1300
1320
1340
Wavelength (nm)

FIG. 4

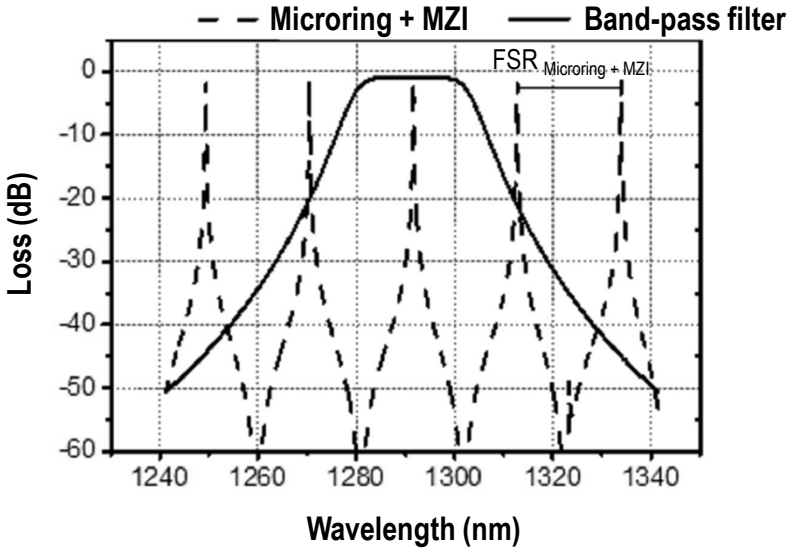
Microring + MZI
Band-pass filter
FSR Microring + MZI
Loss (dB)
0
-10
-20
-30
-40
-50
-60
1240
1260
1280
1300
1320
1340
Wavelength (nm)

FIG. 5

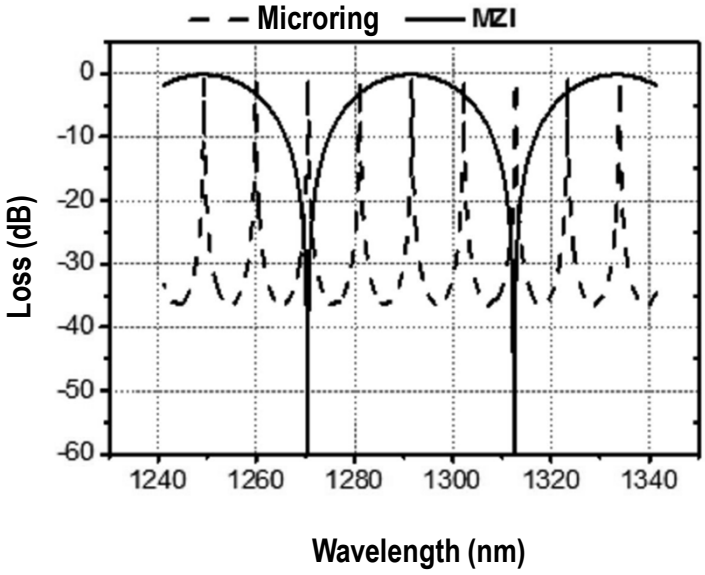
Microring
MZI
0
-10
-20
-30
-40
-50
-60
Loss (dB)
1240
1260
1280
1300
1320
1340
Wavelength (nm)

FIG. 6

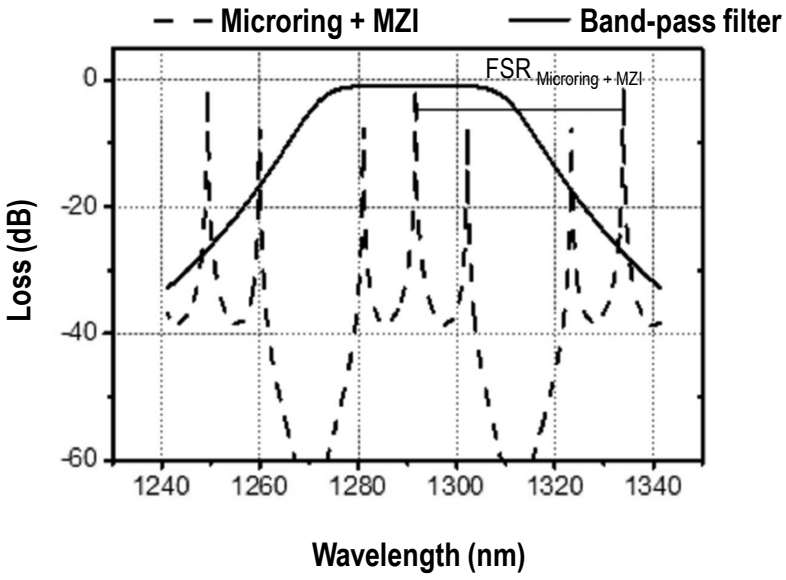
Microring + MZI
Band-pass filter
FSR Microring + MZI
0
-20
-40
-60
Loss (dB)
1240
1260
1280
1300
1320
1340
Wavelength (nm)

FIG. 7

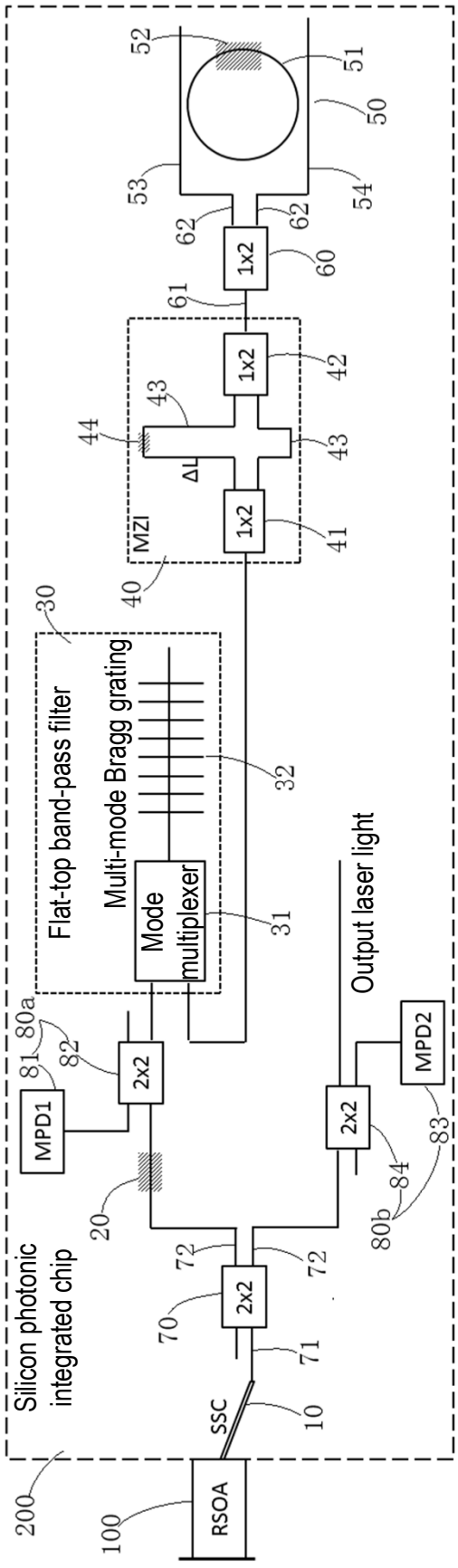
Silicon photonic integrated chip
RSOA
SSC
2x2
MPD1
MPD2
Flat-top band-pass filter
Multi-mode Bragg grating
Mode multiplexer
Output laser light
MZI
ΔL
1x2
10
20
30
31
32
40
41
42
43
44
50
51
52
53
54
60
61
62
70
71
72
80a
80b
81
82
83
84
100
200

FIG. 8

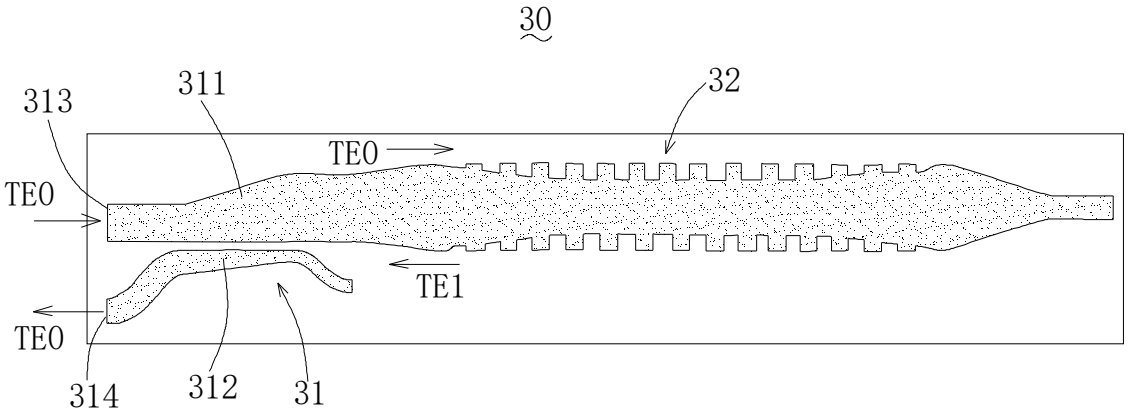

FIG. 9

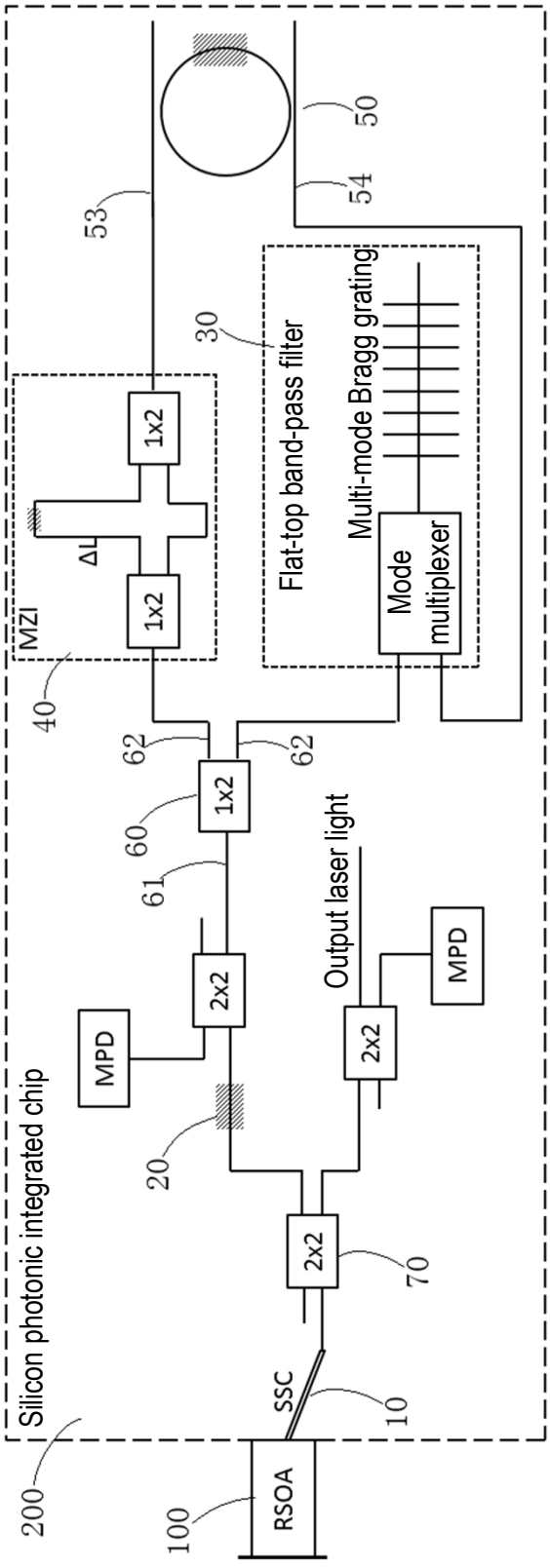
Silicon photonic integrated chip
200
RSOA
100
SSC
10
2x2
70
2x2
20
MPD
2x2
61
1x2
60
62
62
Output laser light
MPD
2x2
40
MZI
1x2
ΔL
1x2
53
30
Flat-top band-pass filter
Multi-mode Bragg grating
Mode multiplexer
54
50

FIG. 10

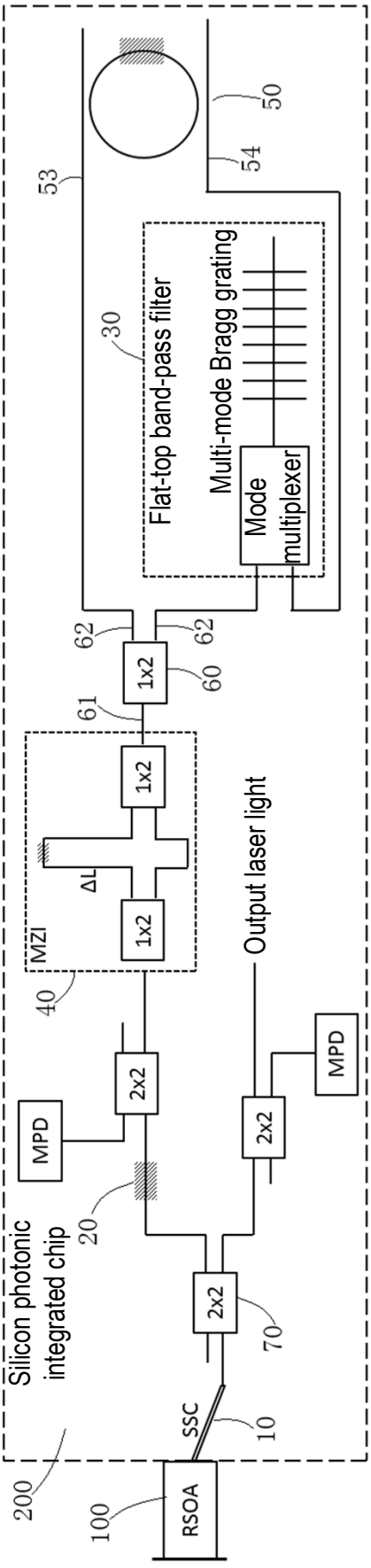
Silicon photonic integrated chip
200
RSOA
100
SSC
10
2x2
70
20
2x2
MPD
2x2
MPD
Output laser light
MZI
40
1x2
ΔL
1x2
1x2
61
1x2
60
62
62
53
54
50
30
Flat-top band-pass filter
Multi-mode Bragg grating
Mode multiplexer

FIG. 11

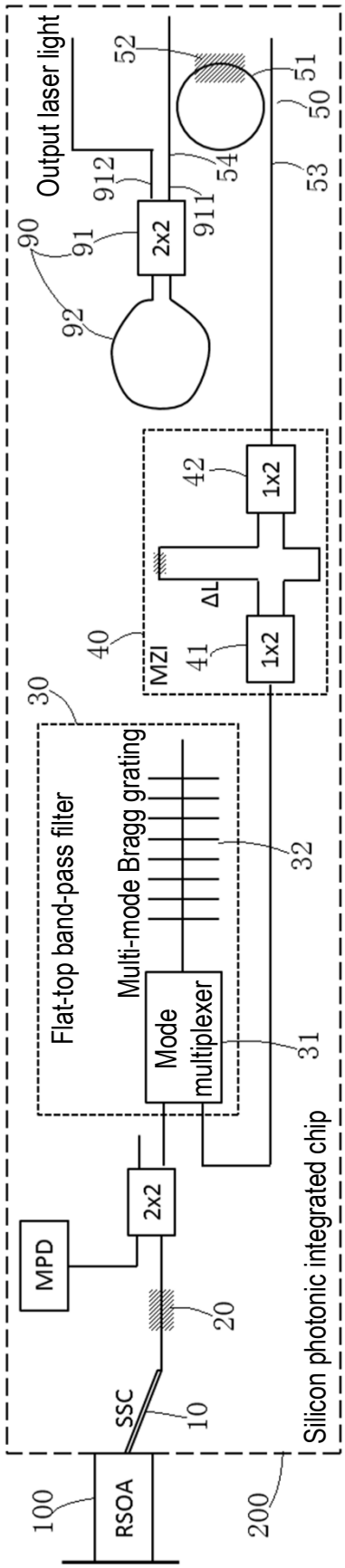
Output laser light
52
51
50
912
54
53
911
90
91
2x2
92
42
1x2
ΔL
40
MZI
41
1x2
30
Flat-top band-pass filter
Multi-mode Bragg grating
32
Mode multiplexer
31
MPD
2x2
20
SSC
10
Silicon photonic integrated chip
100
RSOA
200

FIG. 12

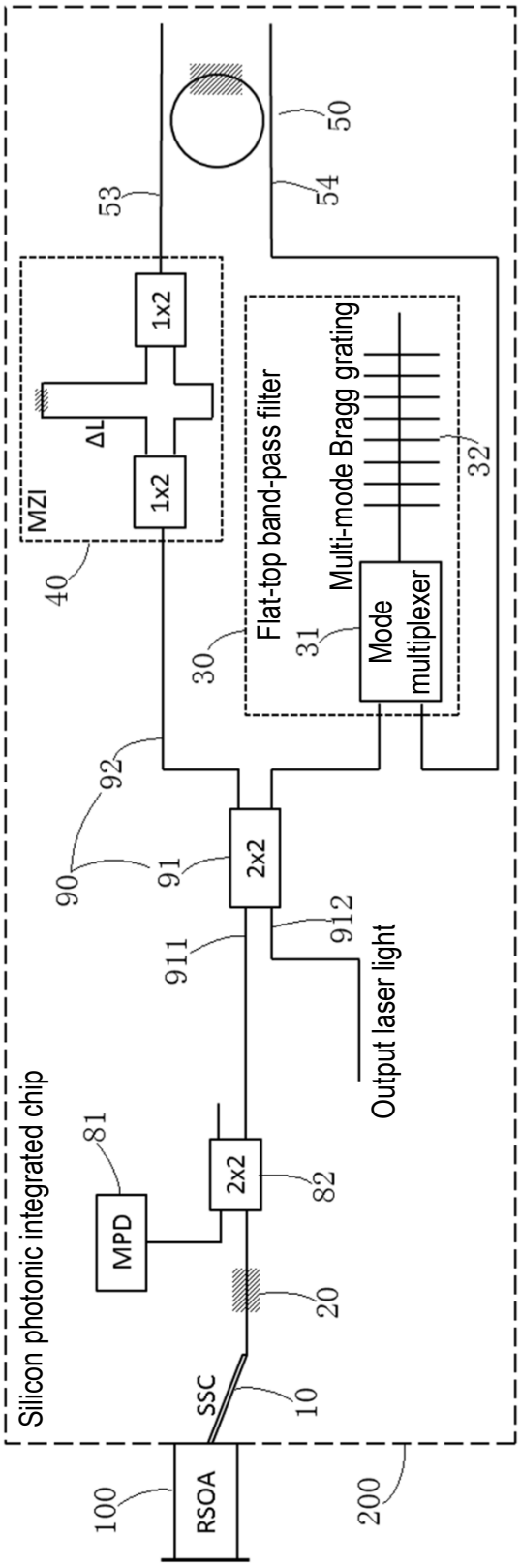
Silicon photonic integrated chip
RSOA
SSC
MPD
2x2
2x2
1x2
ΔL
1x2
MZI
Flat-top band-pass filter
Multi-mode Bragg grating
Mode multiplexer
Output laser light
100
10
20
81
82
90
91
92
911
912
30
31
32
40
50
53
54
200

FIG. 13

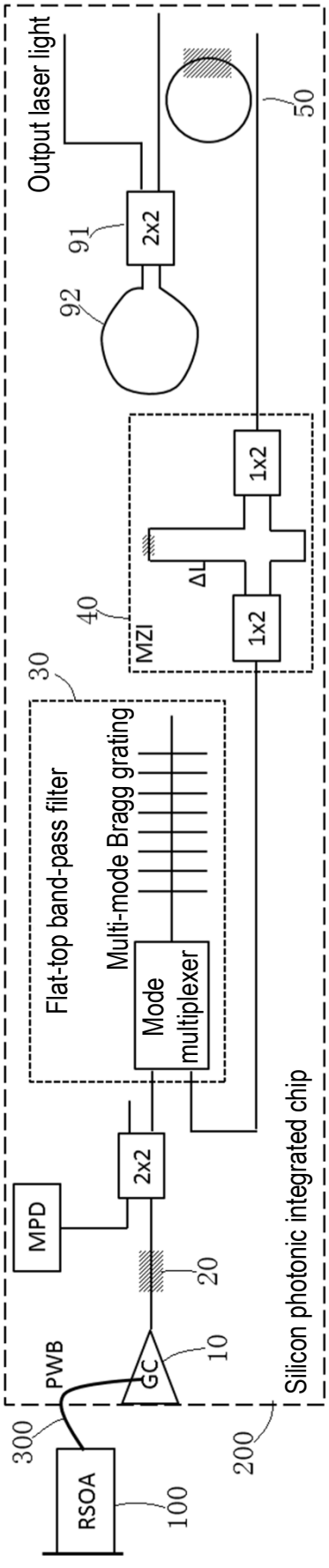
Output laser light
50
91
2x2
92
1x2
ΔL
1x2
40
MZI
30
Flat-top band-pass filter
Multi-mode Bragg grating
Mode multiplexer
2x2
MPD
20
10
GC
PWB
300
RSOA
100
200
Silicon photonic integrated chip

FIG. 14

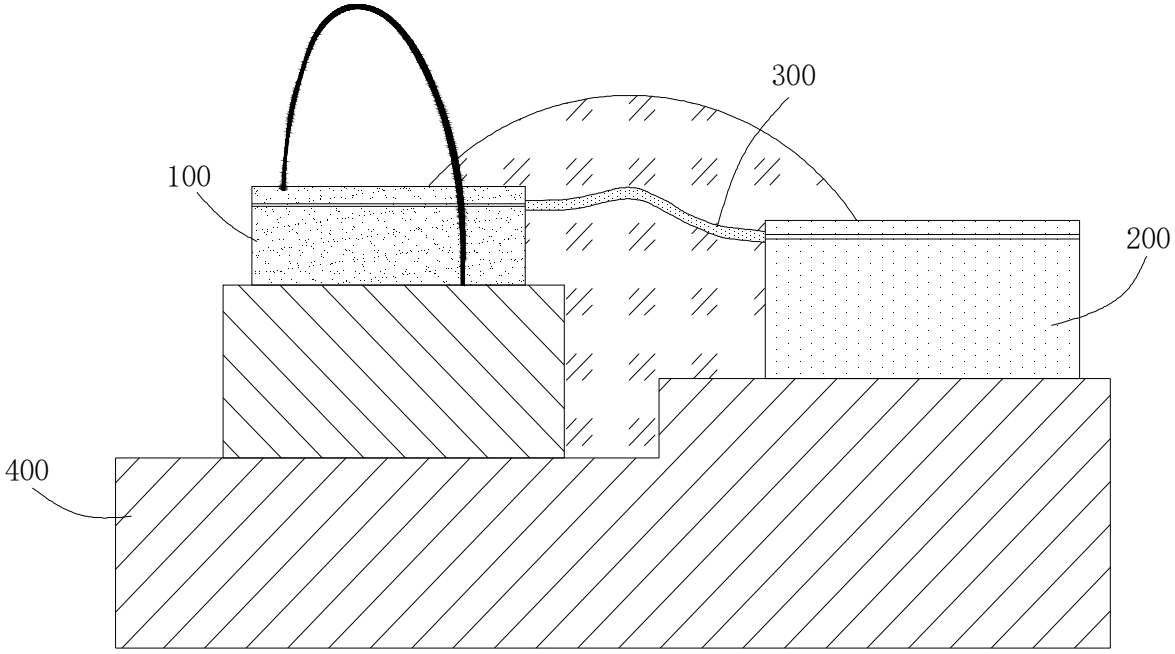

FIG. 15

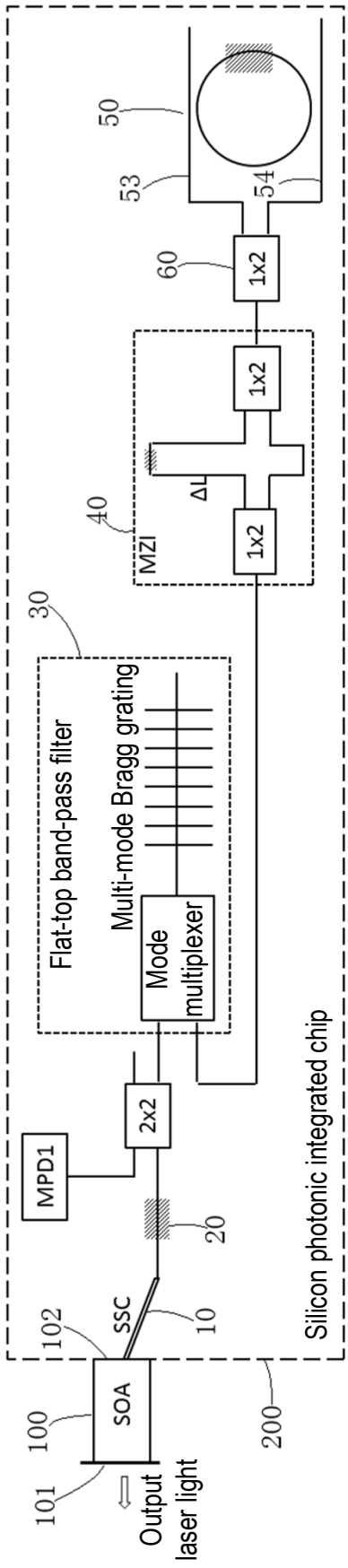
Silicon photonic integrated chip
200
SOA
100
101
Output
laser light
102
SSC
10
20
MPD1
2x2
30
Flat-top band-pass filter
Multi-mode Bragg grating
Mode
multiplexer
40
MZI
ΔL
1x2
1x2
1x2
60
50
53
54

FIG. 16

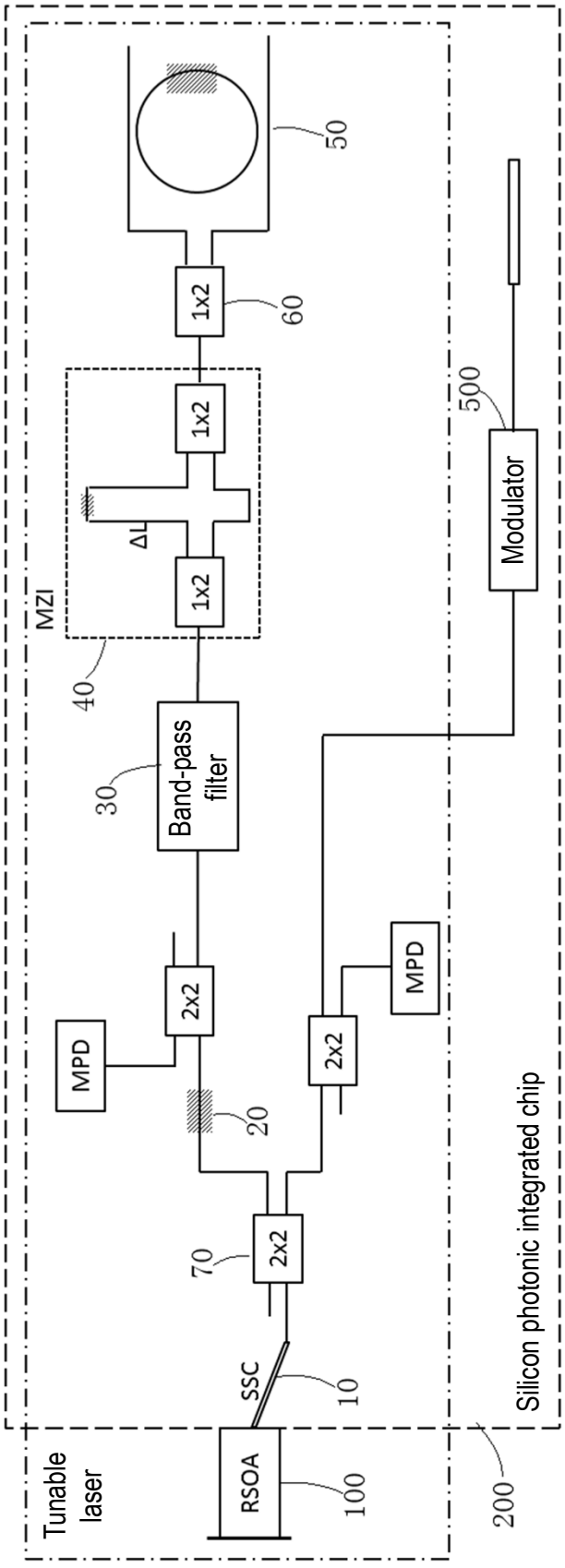
Tunable laser
RSOA
100
SSC
10
Silicon photonic integrated chip
200
70
2x2
20
MPD
2x2
30
Band-pass filter
MZI
40
ΔL
1x2
1x2
1x2
60
50
2x2
MPD
500
Modulator

FIG. 17