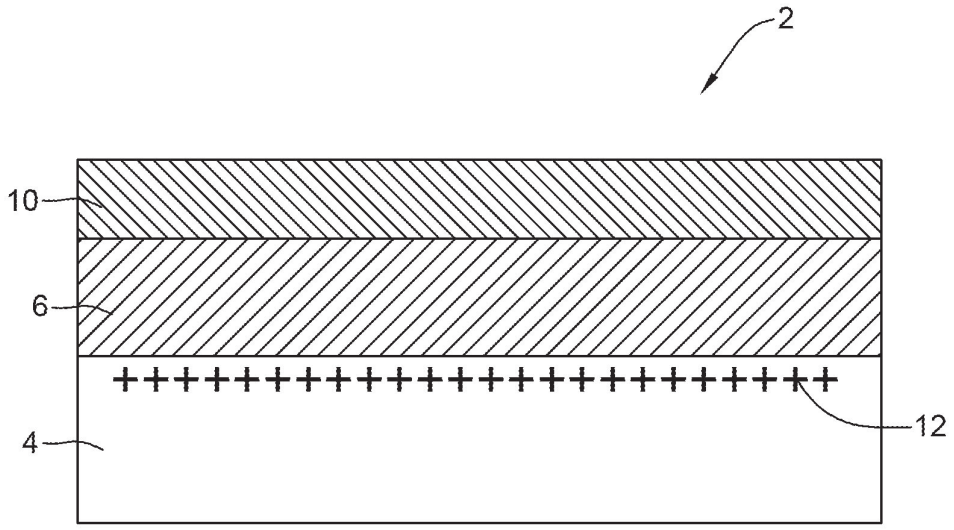

FIG. 1

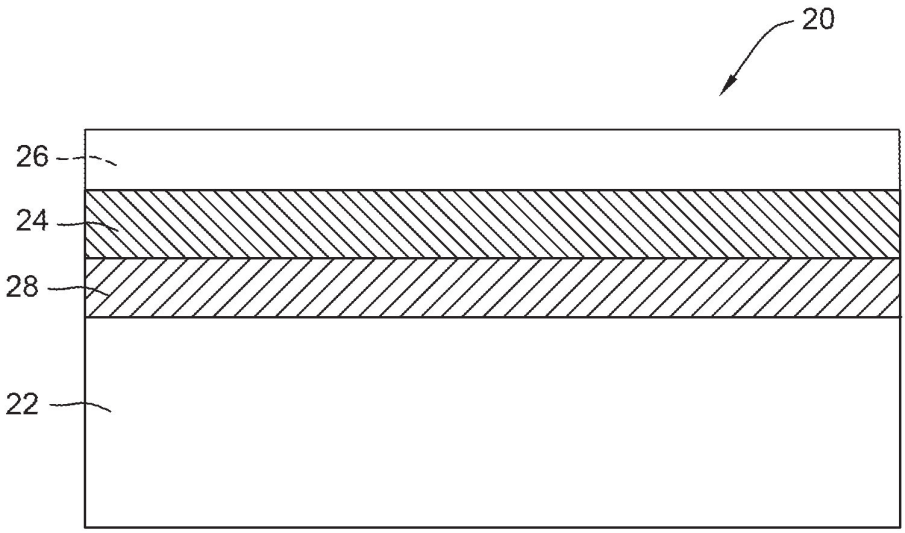

FIG. 2

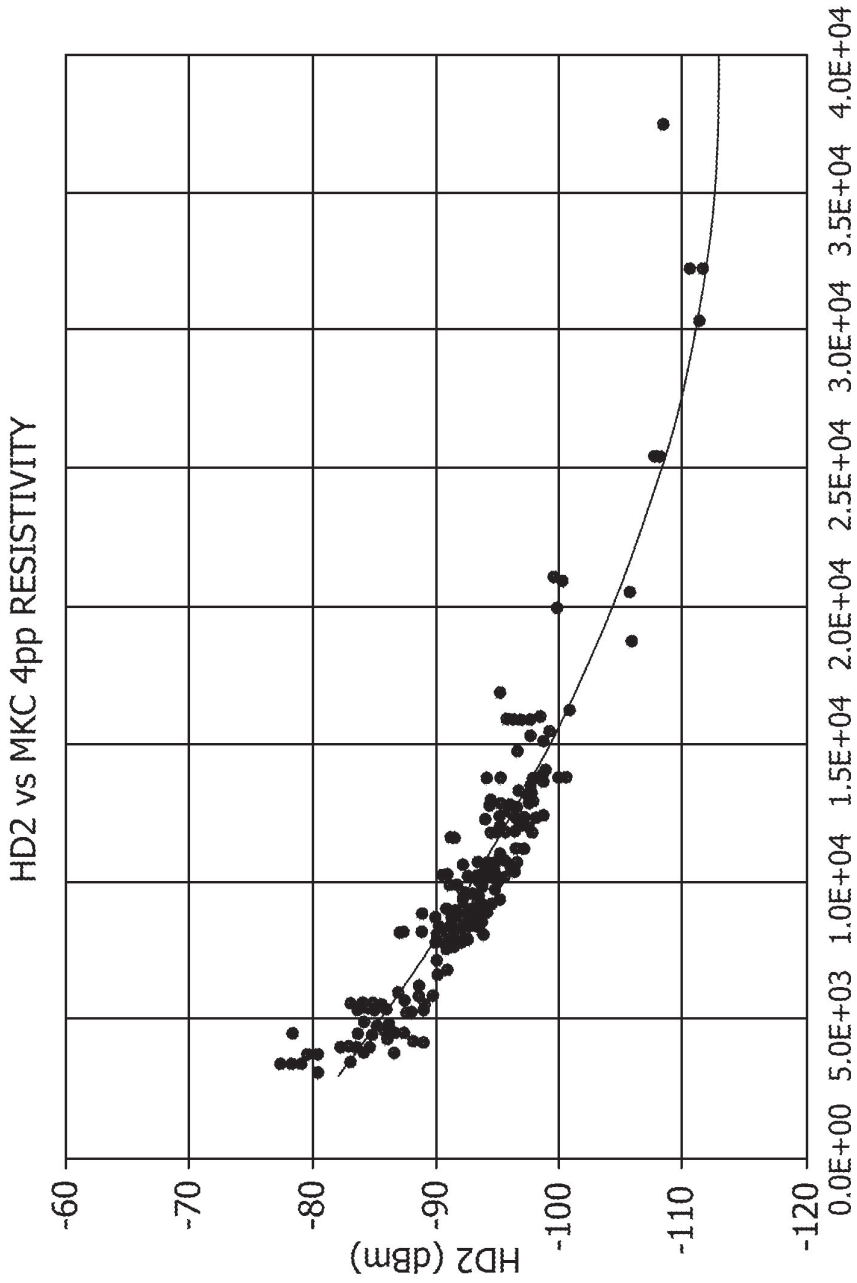
HD2 vs MKC 4pp RESISTIVITY
HD2 (dBm)
-60
-70
-80
-90
-100
-110
-120
0.0E+00
5.0E+03
1.0E+04
1.5E+04
2.0E+04
2.5E+04
3.0E+04
3.5E+04
4.0E+04
SUBSTRATE RESISTIVITY (ohm-cm)

FIG. 3

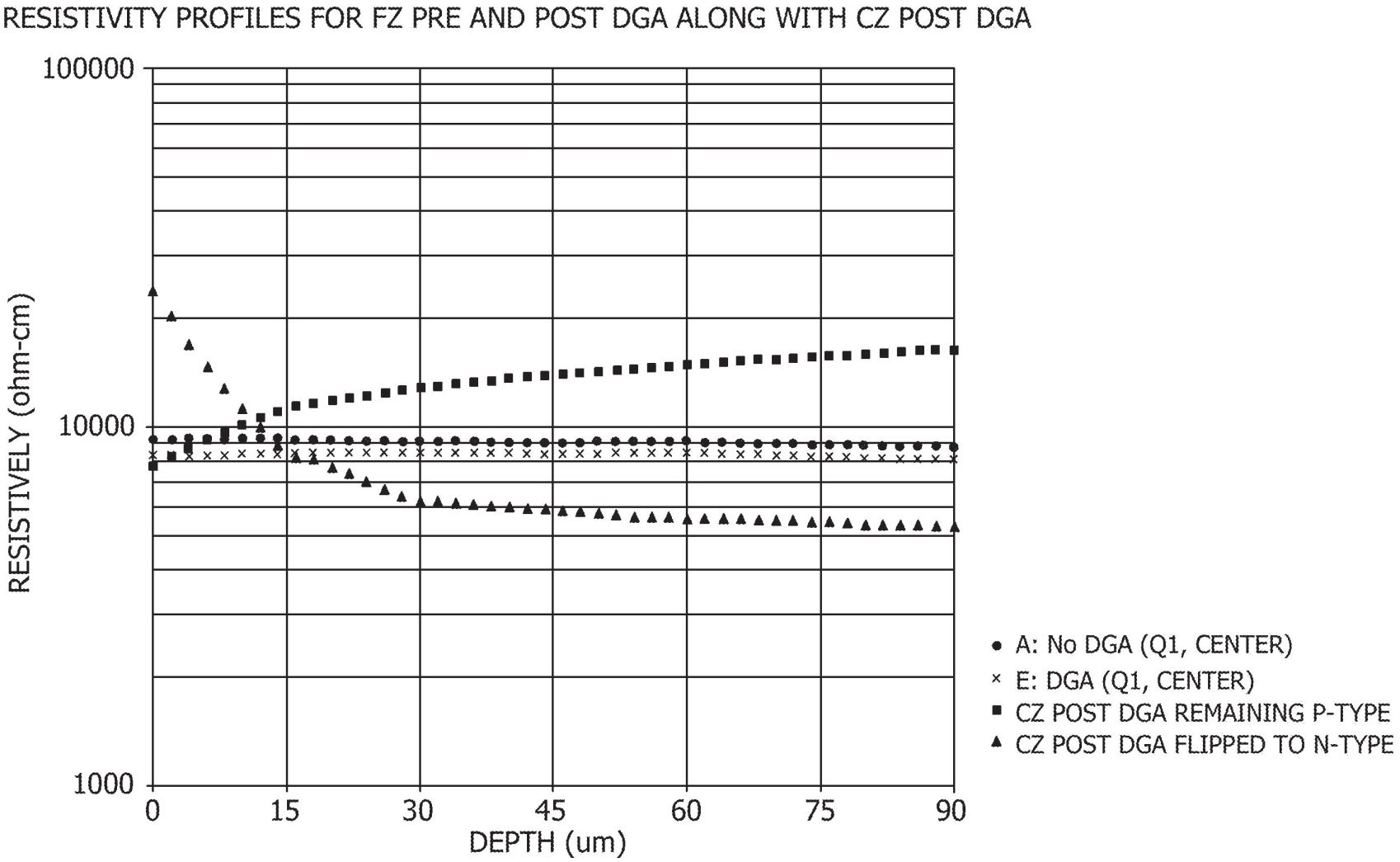
RESISTIVITY PROFILES FOR FZ PRE AND POST DGA ALONG WITH CZ POST DGA
100000
10000
1000
RESISTIVELY (ohm-cm)
0
15
30
45
60
75
90
DEPTH (um)
A: No DGA (Q1, CENTER)
E: DGA (Q1, CENTER)
CZ POST DGA REMAINING P-TYPE
CZ POST DGA FLIPPED TO N-TYPE

FIG. 4

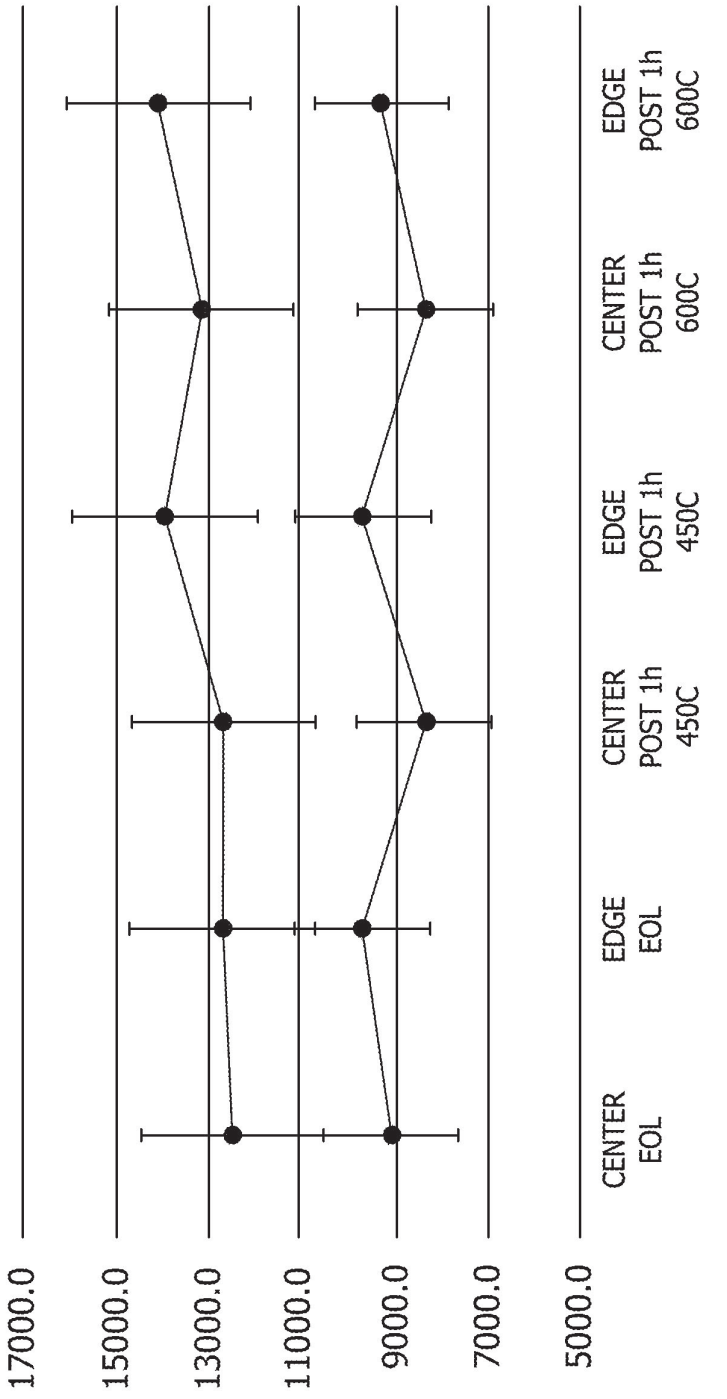
AVERAGE RESISTIVITY (SRP to 90um DEPTH)
17000.0
15000.0
13000.0
11000.0
9000.0
7000.0
5000.0
CENTER EOL
EDGE EOL
CENTER POST 1h 450C
EDGE POST 1h 450C
CENTER POST 1h 600C
EDGE POST 1h 600C
> 5K
> 10K

FIG. 5

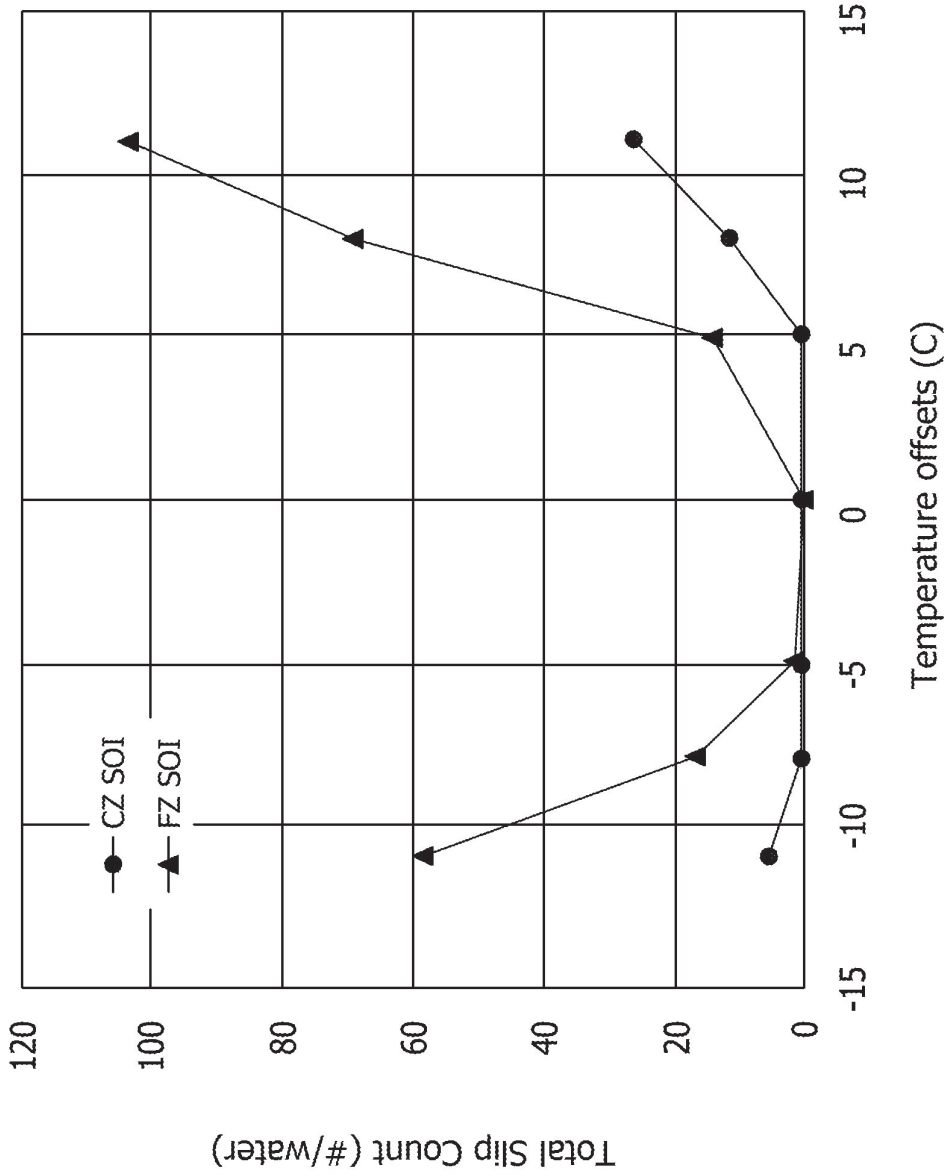
Total Slip Count (#/wafer)
120
100
80
60
40
20
0
-15
-10
-5
0
5
10
15
Temperature offsets (C)
CZ SOI
FZ SOI

FIG. 6

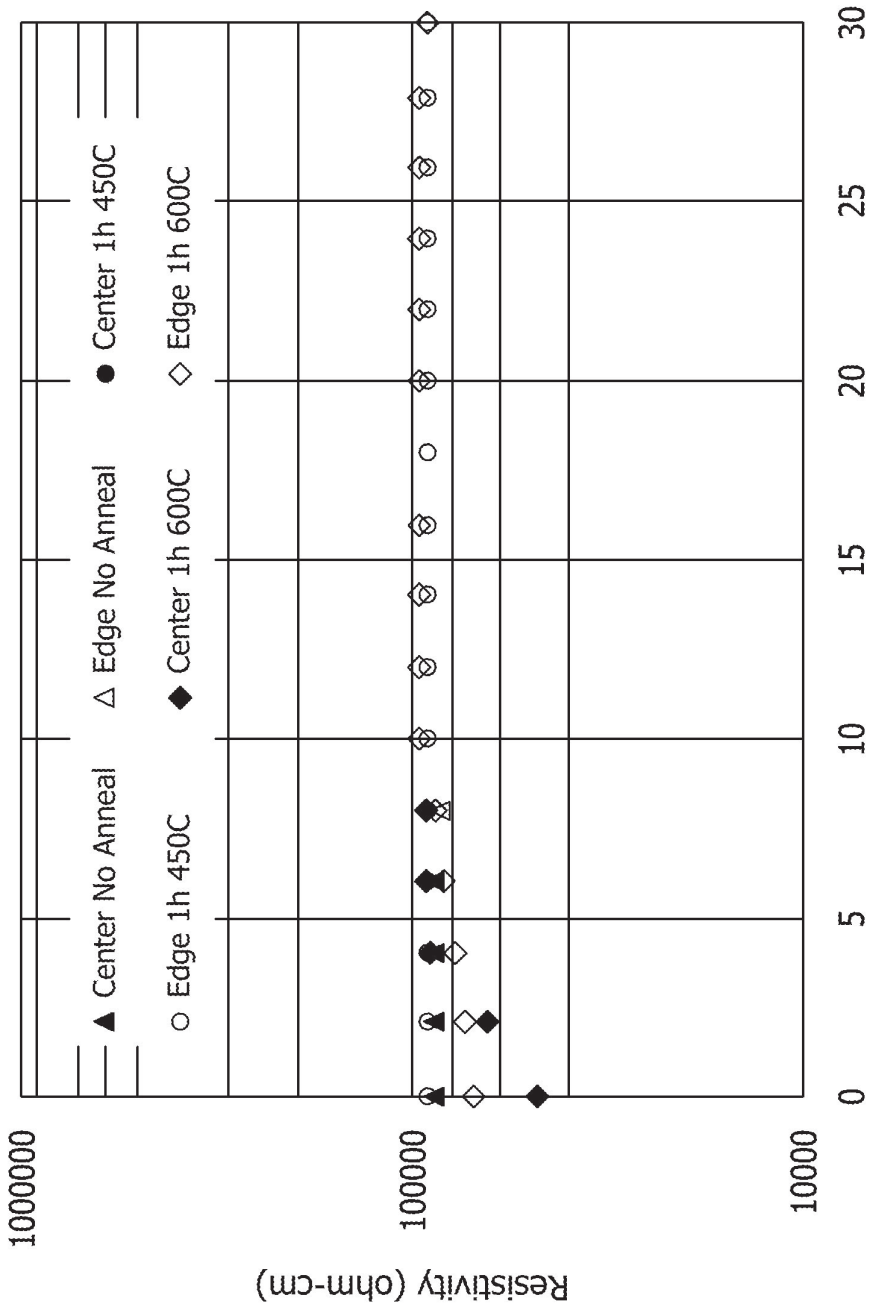
Resistivity (ohm-cm)
1000000
100000
10000
0
5
10
15
20
25
30
Depth (um)
▲ Center No Anneal
△ Edge No Anneal
● Center 1h 450C
○ Edge 1h 450C
◆ Center 1h 600C
◇ Edge 1h 600C

FIG. 7

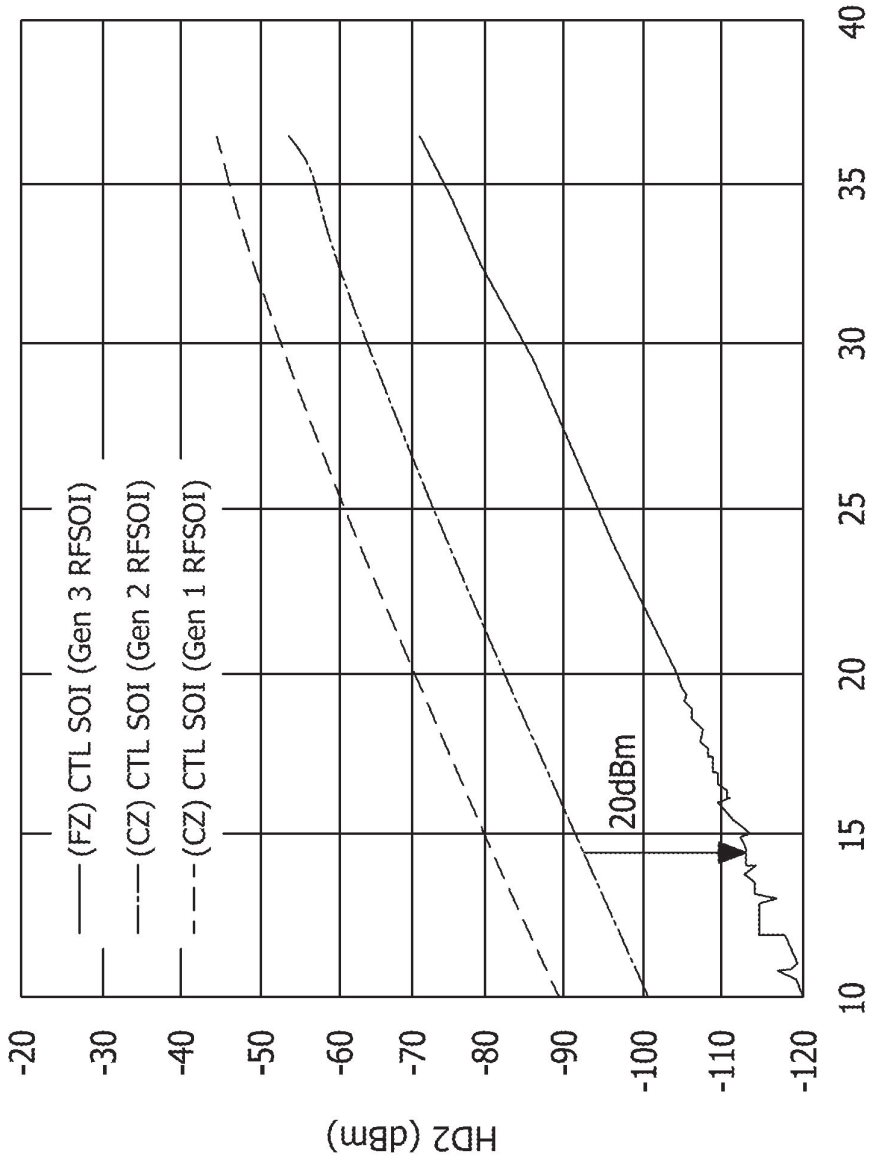
(FZ) CTL SOI (Gen 3 RFSOI)
(CZ) CTL SOI (Gen 2 RFSOI)
(CZ) CTL SOI (Gen 1 RFSOI)
20dBm
HD2 (dBm)
Input Power (dBm)
-20
-30
-40
-50
-60
-70
-80
-90
-100
-110
-120
10
15
20
25
30
35
40

FIG. 8