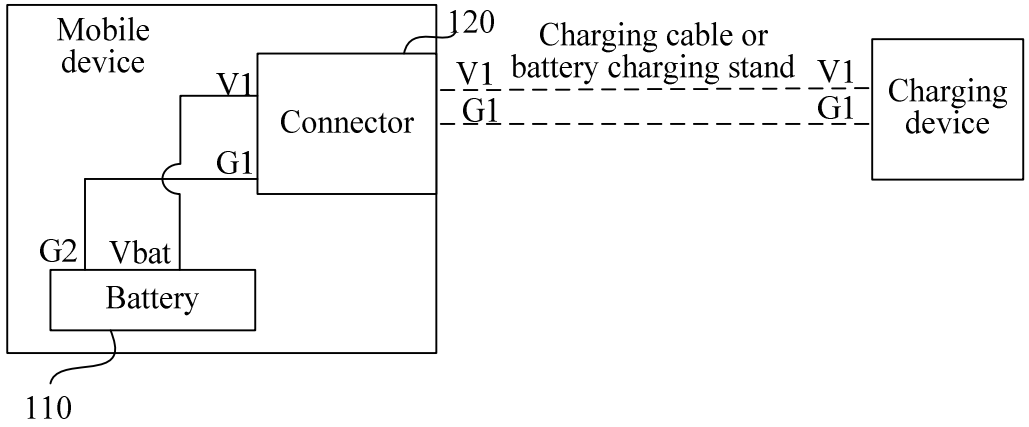
Mobile device
120
Charging cable or battery charging stand
V1
G1
Connector
V1
G1
Charging device
V1
G1
G2
Vbat
Battery
110

FIG. 1

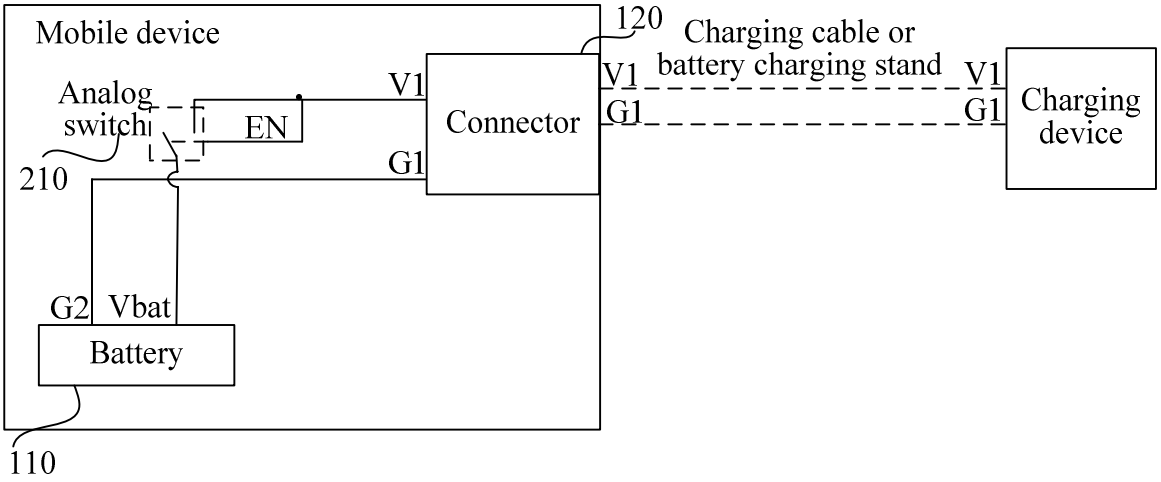
Mobile device
120
Charging cable or battery charging stand
Analog switch
EN
V1
G1
Connector
V1
G1
Charging device
210
G2
Vbat
Battery
110

FIG. 2

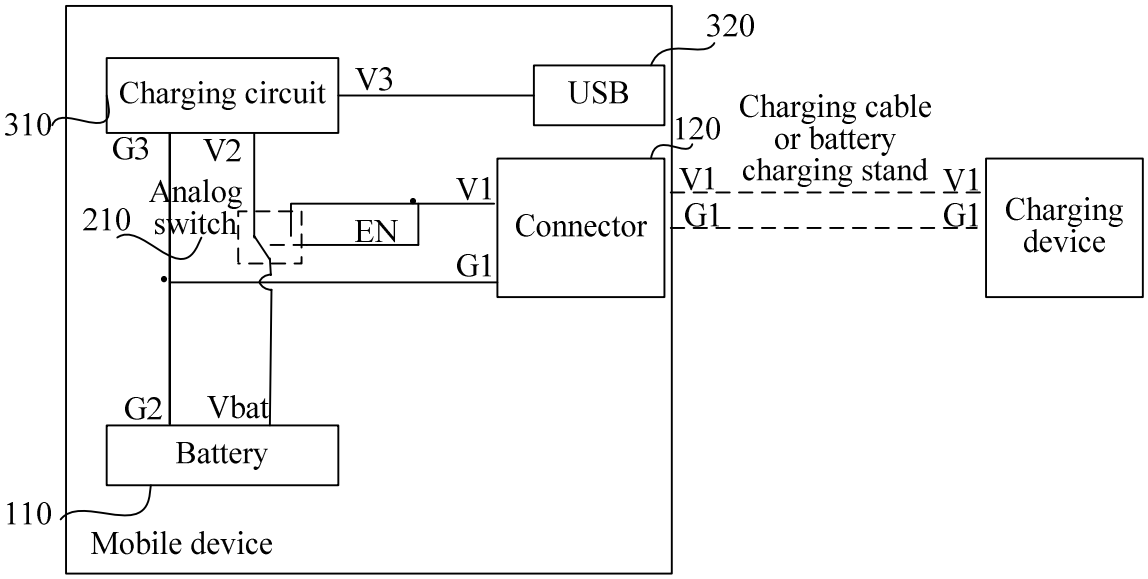
320
Charging circuit
V3
USB
310
G3
V2
120
Charging cable or battery charging stand
V1
V1
Analog switch
210
EN
V1
Connector
G1
G1
Charging device
G1
G2
Vbat
Battery
110
Mobile device

FIG. 3

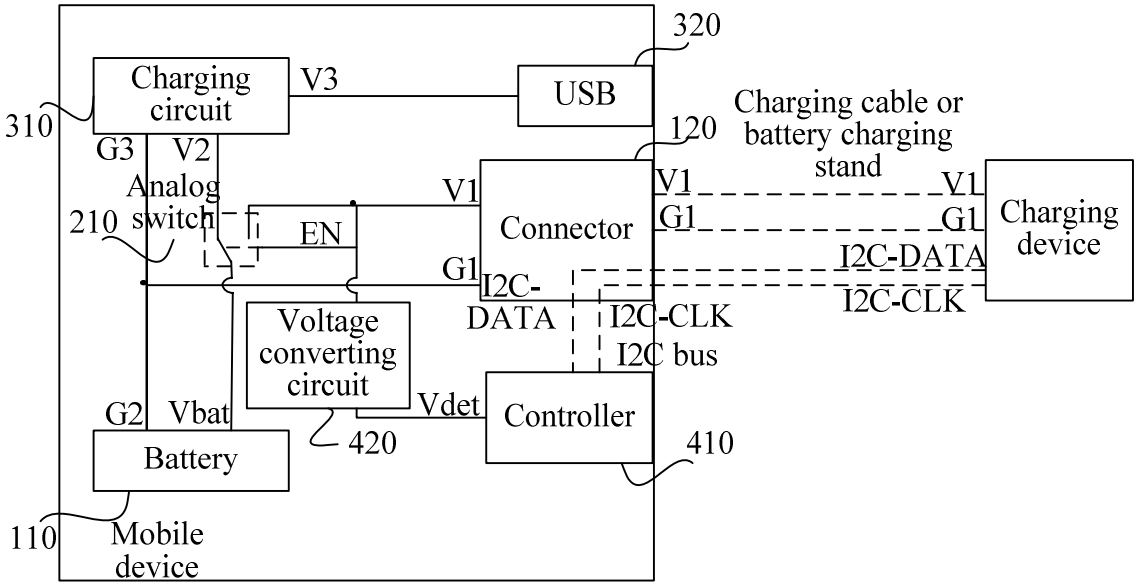
320
Charging circuit
V3
USB
310
G3
V2
120
Charging cable or battery charging stand
V1
V1
Analog switch
210
EN
V1
Connector
G1
G1
Charging device
I2C-DATA
G1
I2C-DATA
I2C-CLK
I2C-CLK
I2C bus
Voltage converting circuit
Vdet
Controller
G2
Vbat
420
410
Battery
110
Mobile device

FIG. 4

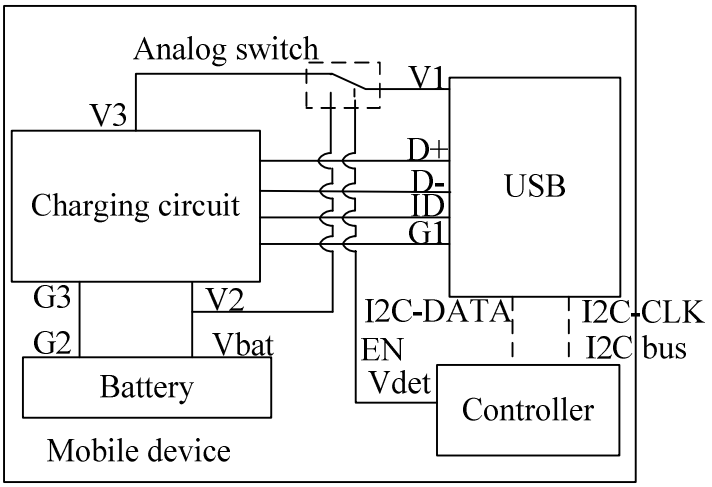
Analog switch
V1
V3
D+
D-
ID
G1
USB
Charging circuit
G3
V2
G2
Vbat
Battery
I2C-DATA
I2C-CLK
EN
I2C bus
Vdet
Controller
Mobile device

FIG. 5

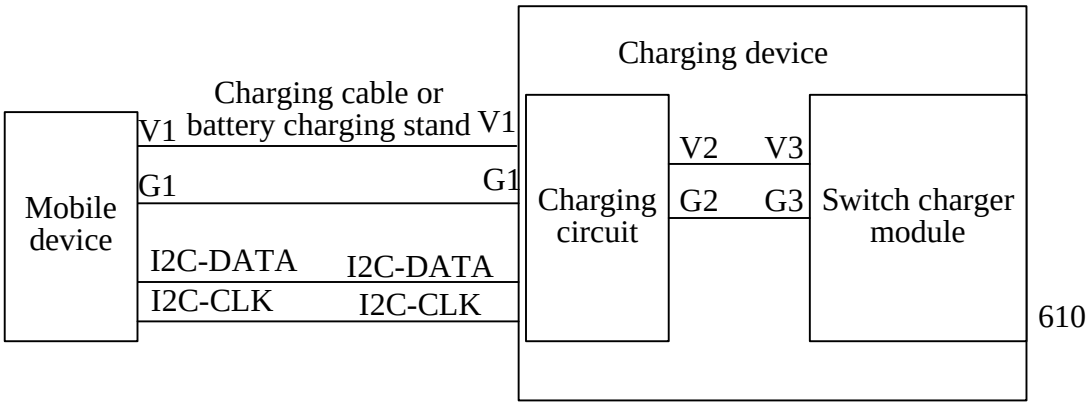
Charging device
Charging cable or
battery charging stand
V1
V1
G1
G1
Mobile
device
I2C-DATA
I2C-DATA
I2C-CLK
I2C-CLK
Charging
circuit
V2
V3
G2
G3
Switch charger
module
610

FIG. 6

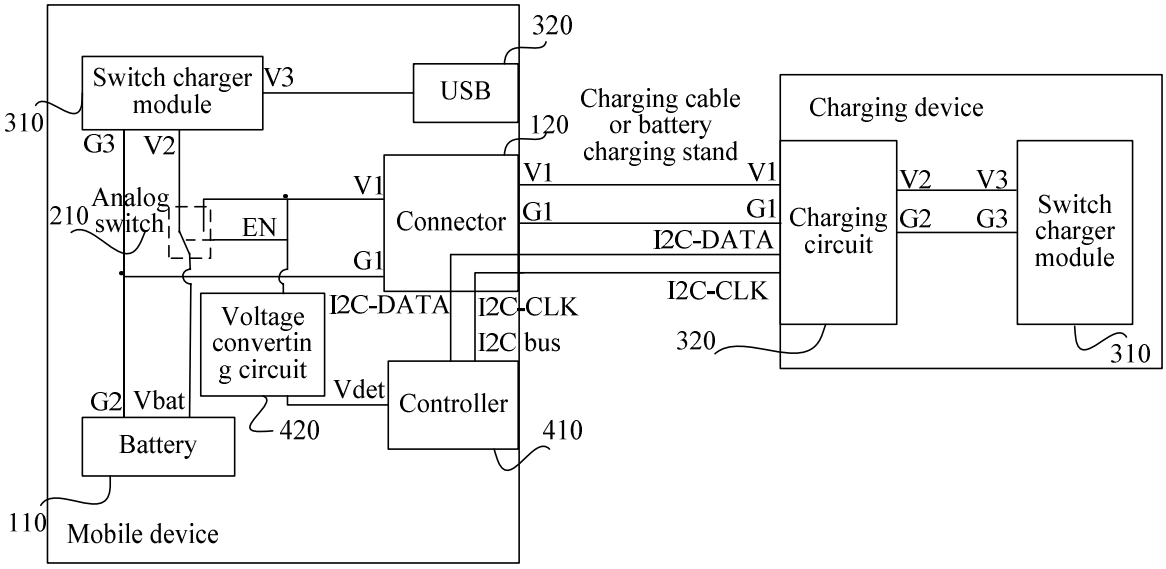
320
Switch charger module
V3
USB
310
G3
V2
120
Charging cable or battery charging stand
Charging device
V1
V1
V2
V3
Analog switch
210
EN
V1
Connector
G1
G1
Charging circuit
G2
G3
Switch charger module
I2C-DATA
G1
I2C-CLK
Voltage convertin g circuit
I2C-DATA
I2C-CLK
I2C bus
320
310
G2
Vbat
Vdet
Controller
420
410
Battery
110
Mobile device

FIG 7

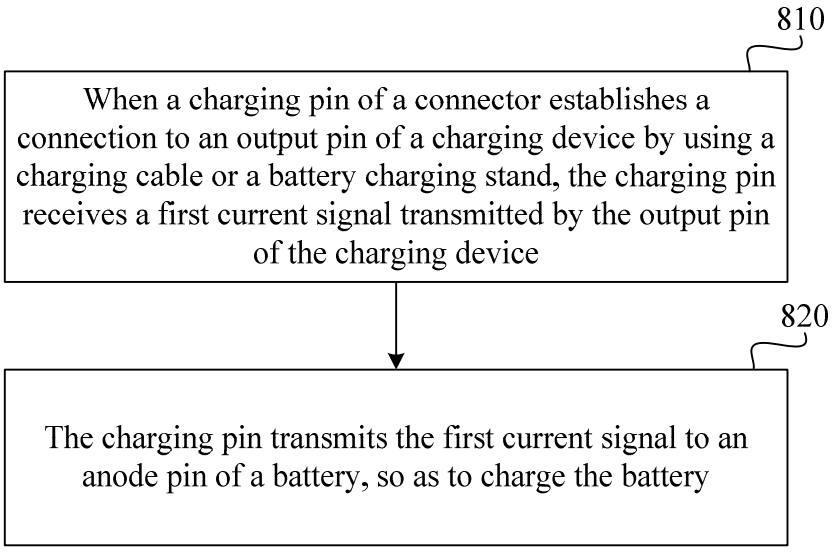
810
When a charging pin of a connector establishes a connection to an output pin of a charging device by using a charging cable or a battery charging stand, the charging pin receives a first current signal transmitted by the output pin of the charging device
820
The charging pin transmits the first current signal to an anode pin of a battery, so as to charge the battery

FIG. 8