29/10/02

20020657 53

(12) INTERNATIONAL APPLICATION PUBLISHED UNDER THE PATENT COOPERATION TREATY (PCT)

(19) World Intellectual Property Organization
International Bureau

ACTION

(43) International Publication Date
15 November 2001 (15.11.2001)

PCT

(10) International Publication Number
WO 01/85550 A3

(51) International Patent Classification[7]: B01L 3/00

(21) International Application Number: PCT/US01/15366

(22) International Filing Date: 10 May 2001 (10.05.2001)

(25) Filing Language: English

(26) Publication Language: English

(30) Priority Data:
09/569,325 11 May 2000 (11.05.2000) US

(71) Applicant *(for all designated States except US)*: **IRM, LLC** [—/—]; c/o Sofia House, 48 Church Street, Hamilton (BM).

(72) Inventors; and

(75) Inventors/Applicants *(for US only)*: **MAINQUIST, James, K.** [US/US]; 12695 Aida Street, San Diego, CA 92130 (US). **DOWNS, Robert, C.** [US/US]; 5795 La Jolla Corona Drive, La Jolla, CA 92037 (US). **WESELAK, Mark, R.** [CA/US]; 5360 Ruette Del Mar, San Diego, CA 92130 (US). **MEYER, Andrew, J.** [US/US]; 3876 1/2 Haines Street, San Diego, CA 92109 (US). **BUROW, Kristina, M.** [US/US]; 4465 35th Street, San Diego, CA 92116 (US). **SIPES, Daniel, G.** [US/US]; P.O. Box 85, Bethel Island, CA 94511 (US). **CALDWELL, Jeremy, S.** [US/US]; 120 8th Street, Del Mar, CA 92014 (US).

(74) Agents: **BROOK, Mitchell, P.** et al.; Baker & McKenzie, Twelfth Floor, 101 West Broadway, San Diego, CA 92101 (US).

(81) Designated States *(national)*: AE, AG, AL, AM, AT, AU, AZ, BA, BB, BG, BR, BY, BZ, CA, CH, CN, CO, CR, CU, CZ, DE, DK, DM, DZ, EC, EE, ES, FI, GB, GD, GE, GH, GM, HR, HU, ID, IL, IN, IS, JP, KE, KG, KP, KR, KZ, LC, LK, LR, LS, LT, LU, LV, MA, MD, MG, MK, MN, MW, MX, MZ, NO, NZ, PL, PT, RO, RU, SD, SE, SG, SI, SK, SL, TJ, TM, TR, TT, TZ, UA, UG, US, UZ, VN, YU, ZA, ZW.

(84) Designated States *(regional)*: ARIPO patent (GH, GM, KE, LS, MW, MZ, SD, SL, SZ, TZ, UG, ZW), Eurasian patent (AM, AZ, BY, KG, KZ, MD, RU, TJ, TM), European patent (AT, BE, CH, CY, DE, DK, ES, FI, FR, GB, GR, IE, IT, LU, MC, NL, PT, SE, TR), OAPI patent (BF, BJ, CF, CG, CI, CM, GA, GN, GW, ML, MR, NE, SN, TD, TG).

Published:
— *with international search report*

[Continued on next page]

(54) Title: SPECIMEN PLATE LID AND METHOD OF USING

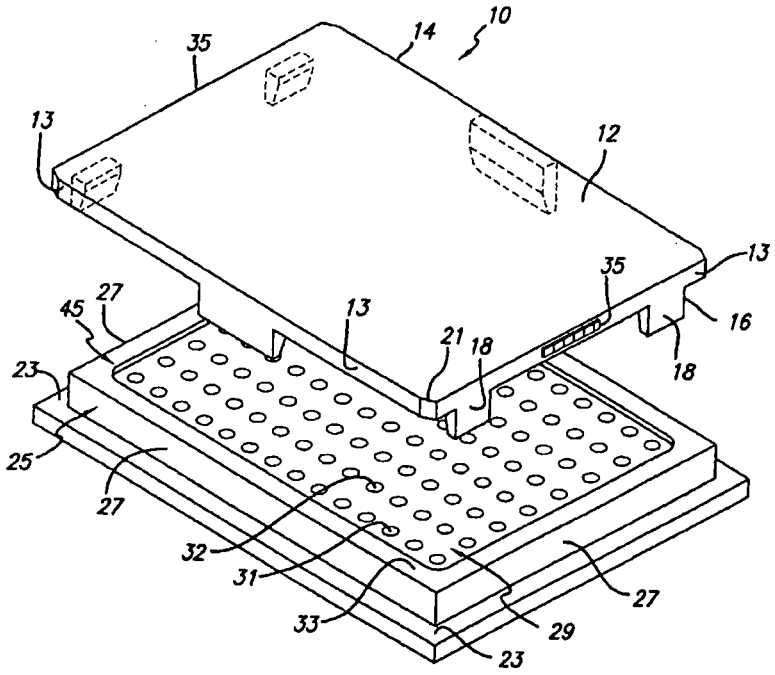

(57) Abstract: The specimen plate lid (10) has a cover portion (12) and side portion (13) with alignment tabs (18).

WO 01/85550 A3

(88) Date of publication of the international search report:
28 February 2002

For two-letter codes and other abbreviations, refer to the "Guidance Notes on Codes and Abbreviations" appearing at the beginning of each regular issue of the PCT Gazette.