ENGLISH TRANSLATION OF LEDEND OF THE DRAWINGS

FIG. 1

10	vertical magnetic recording disk
9	lubricating layer
8	carbon based protecting layer
7	laminated layer
6	spacer layer
5	ferromagnetic layer
4b	second ground layer
4a	first ground layer
3	soft magnetic layer
2	bonding layer
1	glass substrate

[図1] FIG. 1

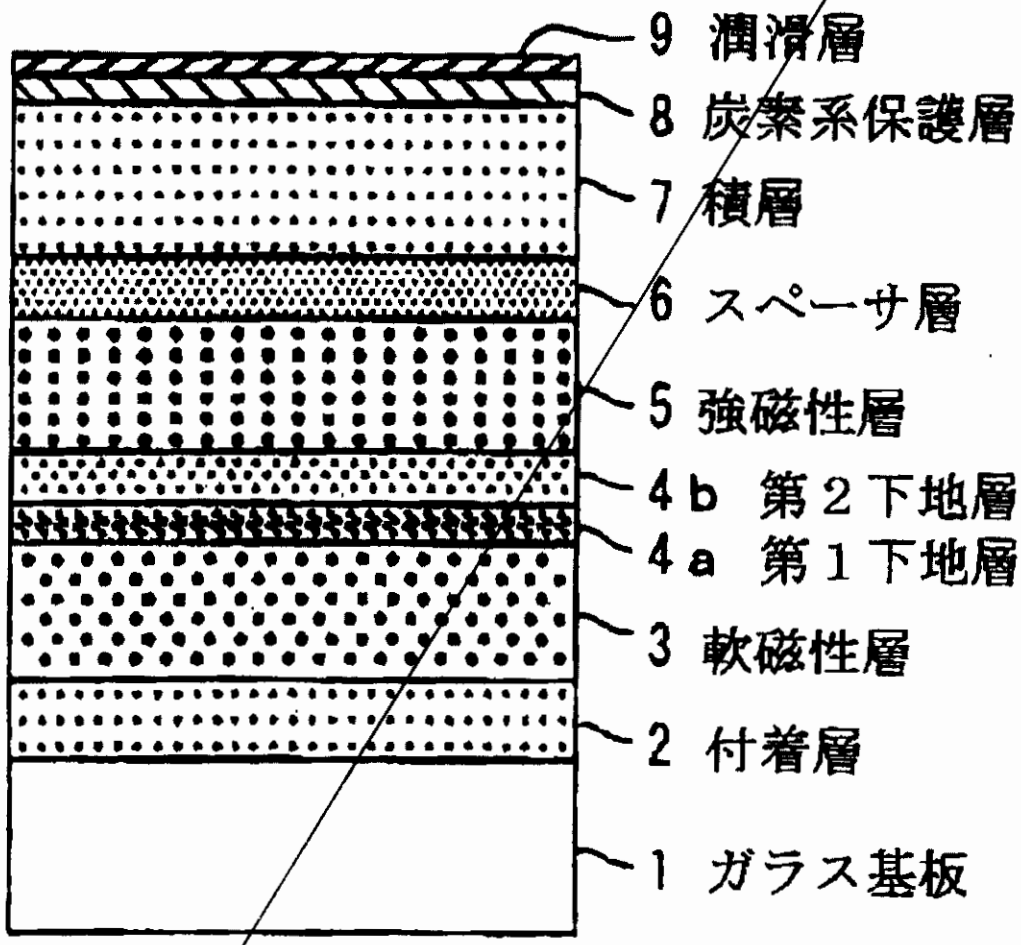
10 垂直磁気記録ディスク
9 潤滑層
8 炭素系保護層
7 積層
6 スペーサ層
5 強磁性層
4b 第２下地層
4a 第１下地層
3 軟磁性層
2 付着層
1 ガラス基板

FIG. 1

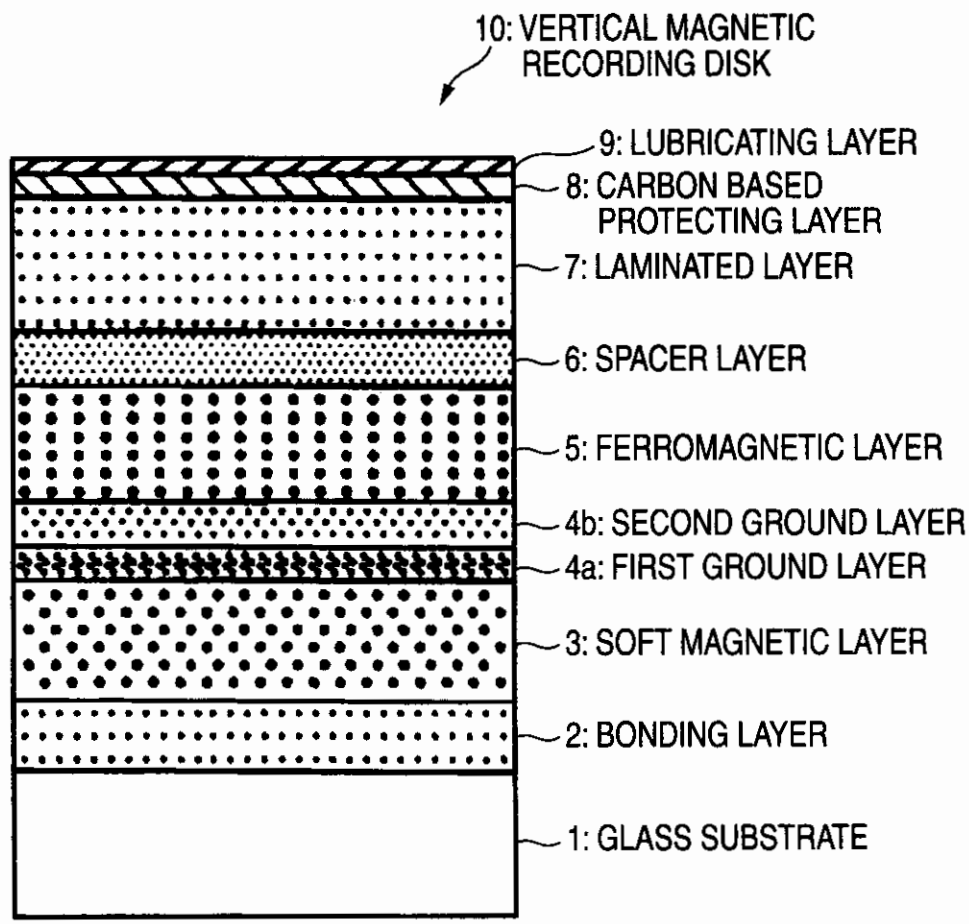
10: VERTICAL MAGNETIC RECORDING DISK
9: LUBRICATING LAYER
8: CARBON BASED PROTECTING LAYER
7: LAMINATED LAYER
6: SPACER LAYER
5: FERROMAGNETIC LAYER
4b: SECOND GROUND LAYER
4a: FIRST GROUND LAYER
3: SOFT MAGNETIC LAYER
2: BONDING LAYER
1: GLASS SUBSTRATE