


**Figure 1A**

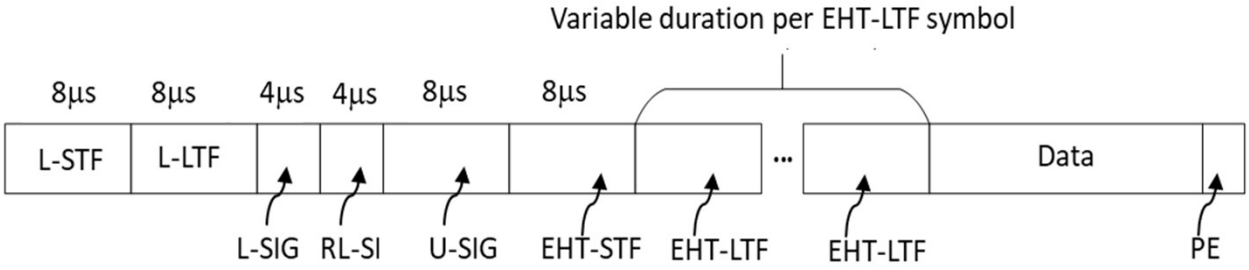


**Figure 1B**

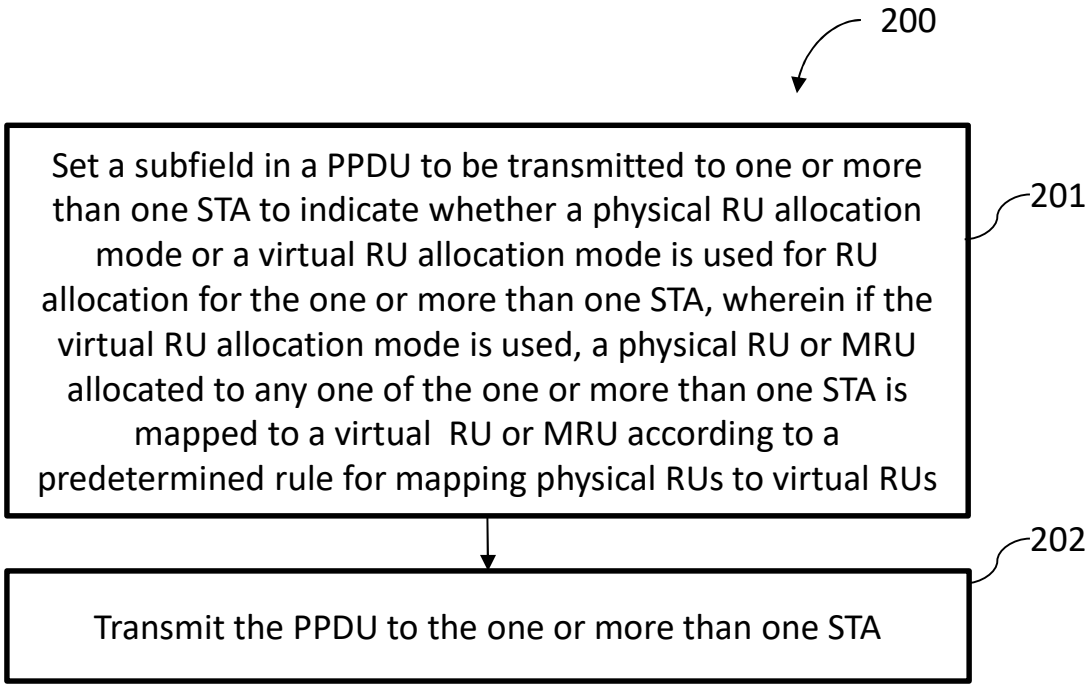


**Figure 2**

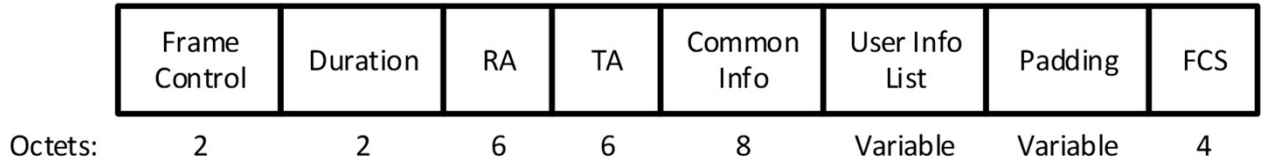


**Figure 3A**



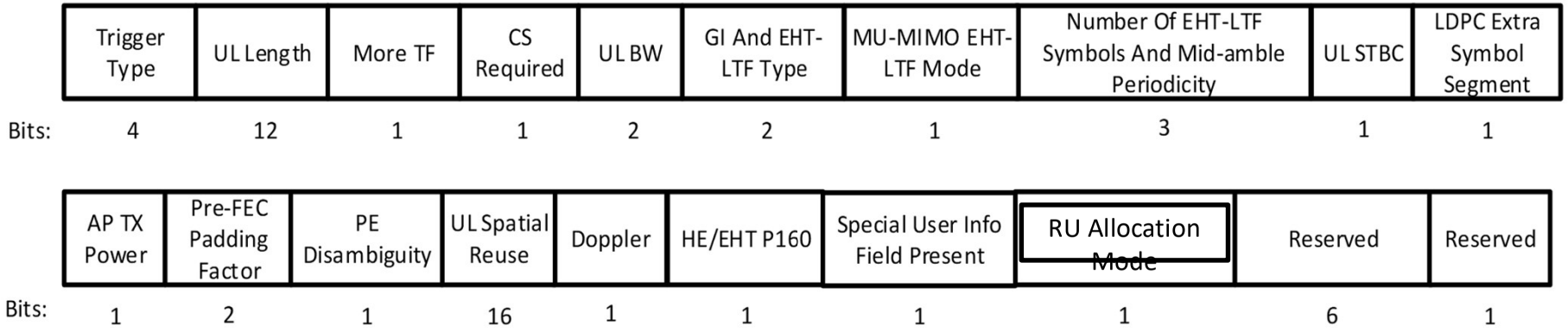


**Figure 3B**

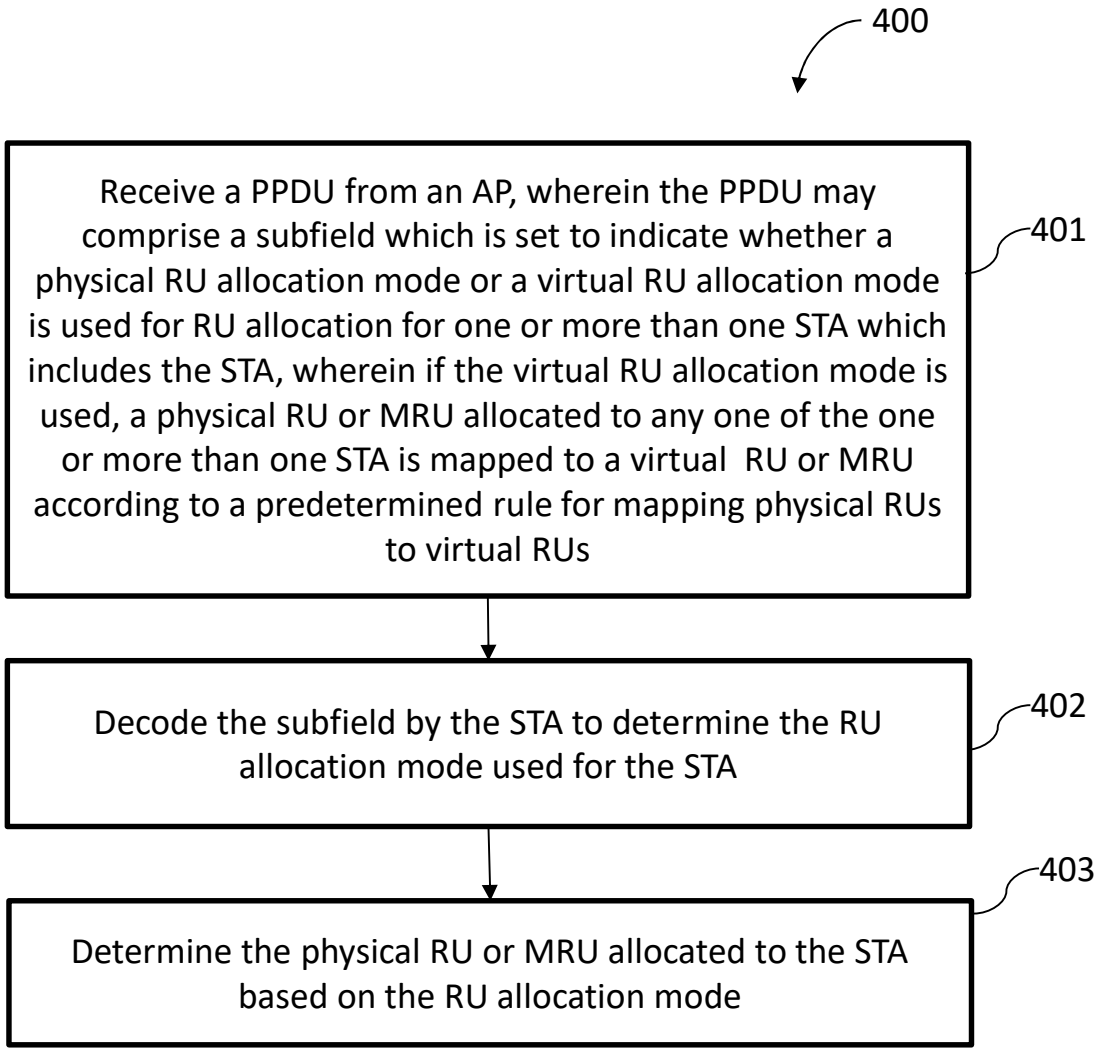
400
Receive a PPDU from an AP, wherein the PPDU may comprise a subfield which is set to indicate whether a physical RU allocation mode or a virtual RU allocation mode is used for RU allocation for one or more than one STA which includes the STA, wherein if the virtual RU allocation mode is used, a physical RU or MRU allocated to any one of the one or more than one STA is mapped to a virtual RU or MRU according to a predetermined rule for mapping physical RUs to virtual RUs
401
Decode the subfield by the STA to determine the RU allocation mode used for the STA
402
Determine the physical RU or MRU allocated to the STA based on the RU allocation mode
403

**Figure 4**

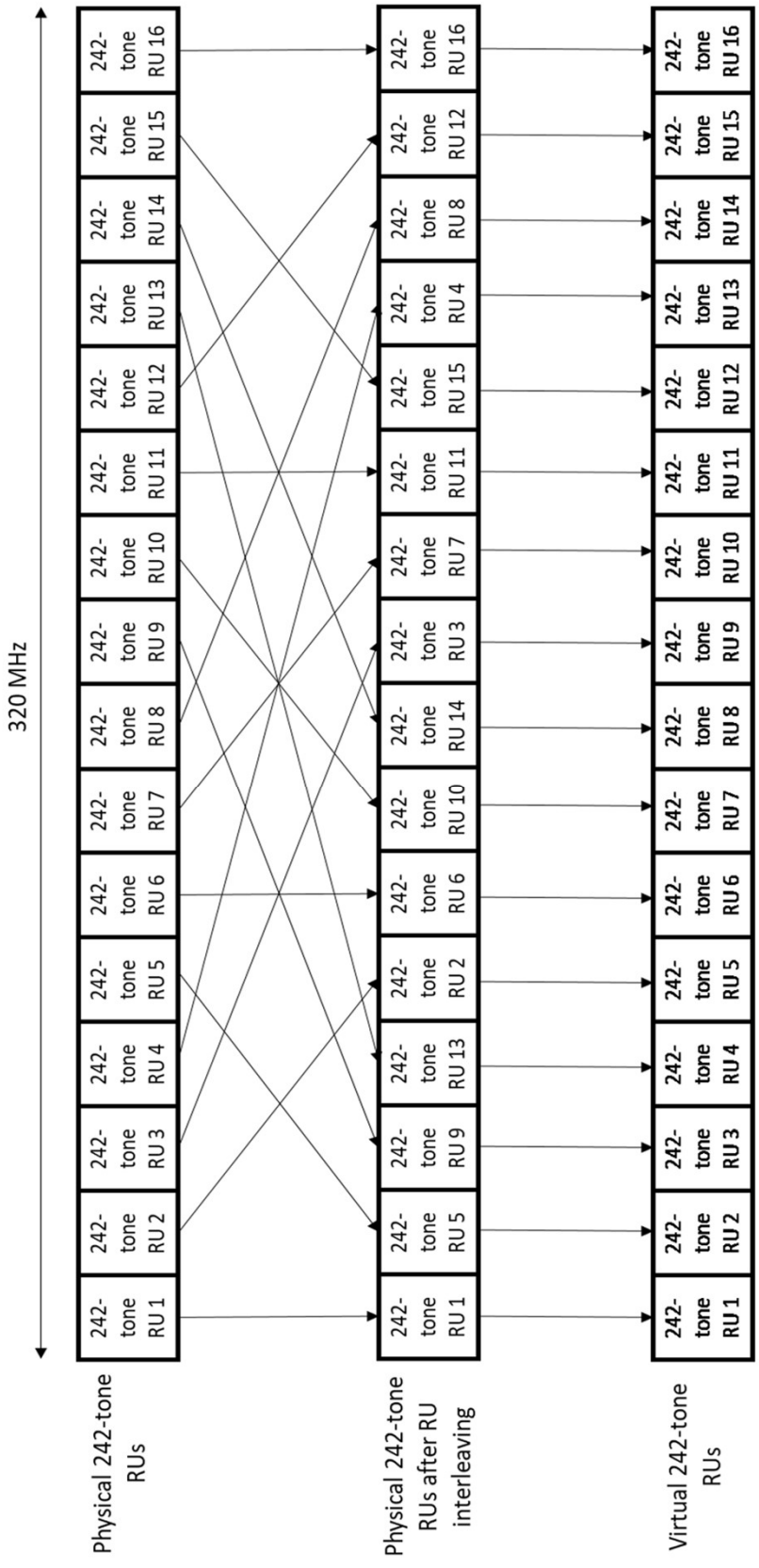
320 MHz
Physical 242-tone RUs
Physical 242-tone RUs after RU interleaving
Virtual 242-tone RUs
242-tone RU 1
242-tone RU 2
242-tone RU 3
242-tone RU 4
242-tone RU 5
242-tone RU 6
242-tone RU 7
242-tone RU 8
242-tone RU 9
242-tone RU 10
242-tone RU 11
242-tone RU 12
242-tone RU 13
242-tone RU 14
242-tone RU 15
242-tone RU 16

**Figure 5A**

Read-in row by row

| | | | |
|---|---|---|---|
| 1 | 2 | 3 | 4 |
| 5 | 6 | 7 | 8 |
| 9 | 10 | 11 | 12 |
| 13 | 14 | 15 | 16 |

Read-out column by column

**Figure 5B**

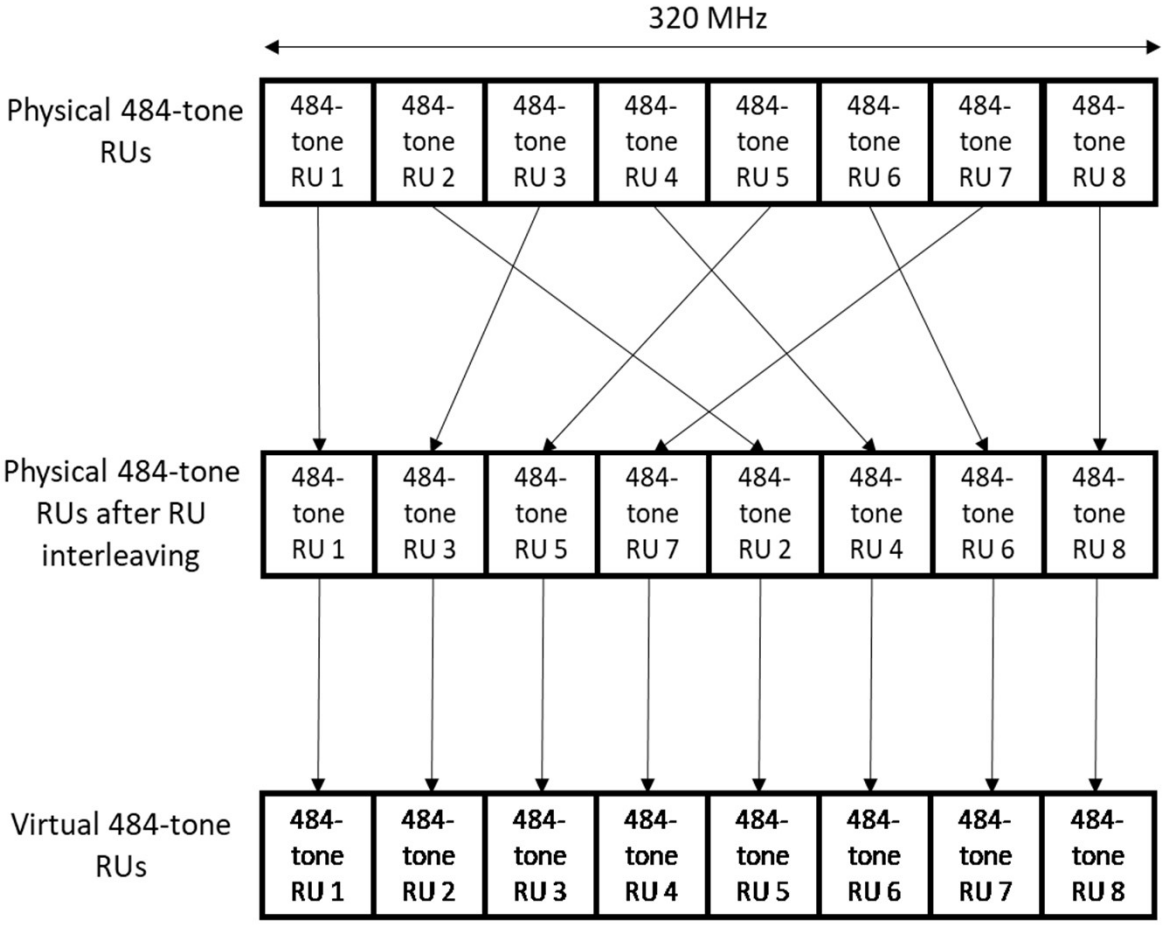


**Figure 5C**

Read-in row by row

| | |
|---|---|
| 1 | 2 |
| 3 | 4 |
| 5 | 6 |
| 7 | 8 |

Read-out column by column

**Figure 5D**

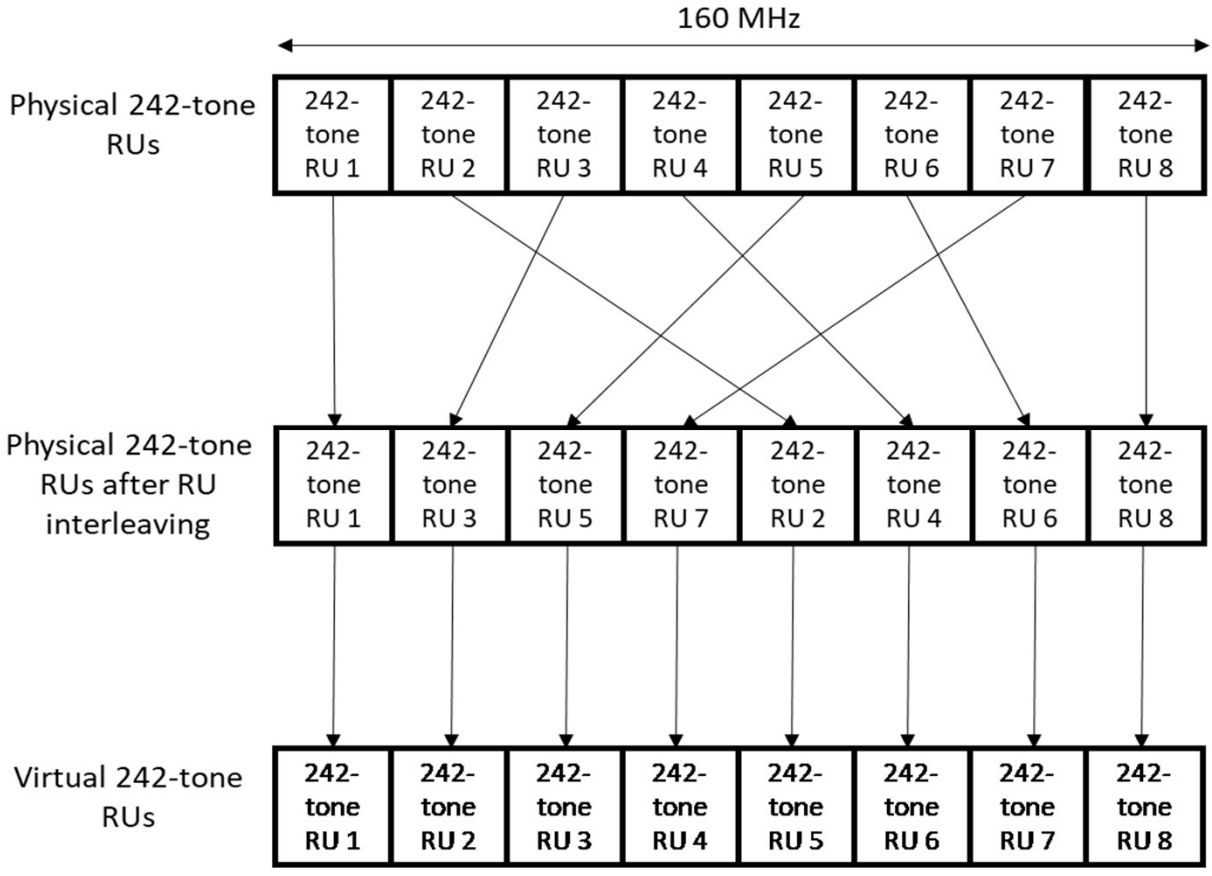


**Figure 5E**

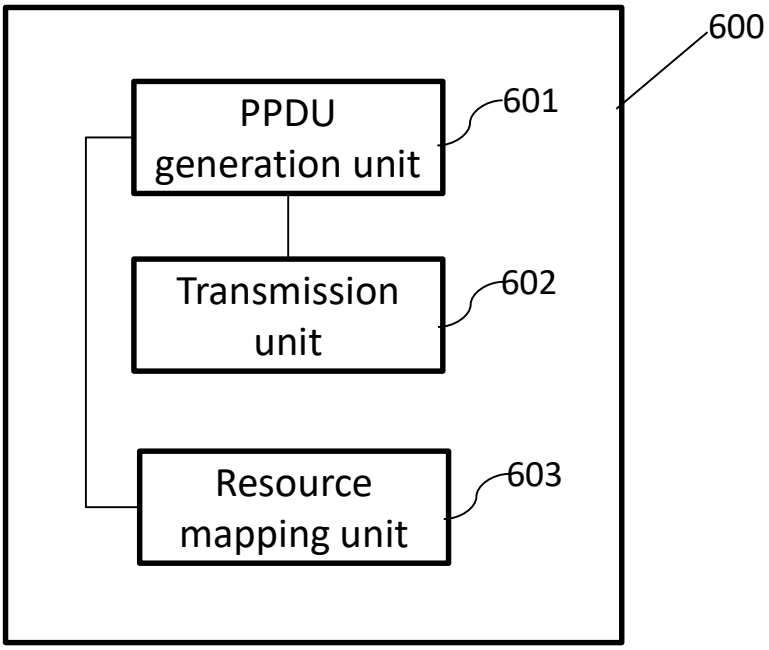


**Figure 6**

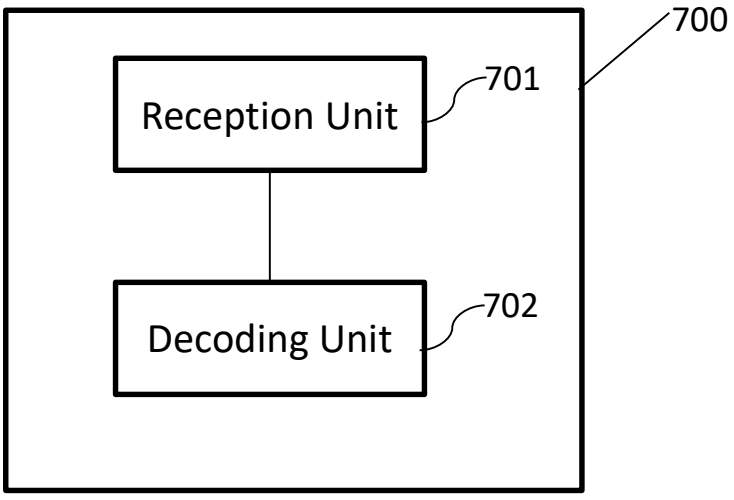


**Figure 7**