(12) INTERNATIONAL APPLICATION PUBLISHED UNDER THE PATENT COOPERATION TREATY (PCT)

(19) World Intellectual Property Organization
International Bureau

(43) International Publication Date
22 July 2021 (22.07.2021)

WIPO | PCT

(10) International Publication Number
WO 2021/146099 A1

(51) International Patent Classification:
C23C 16/455 (2006.01) *H01J 37/32* (2006.01)
C23C 16/44 (2006.01)

(21) International Application Number:
PCT/US2021/012604

(22) International Filing Date:
08 January 2021 (08.01.2021)

(25) Filing Language: English

(26) Publication Language: English

(30) Priority Data:
62/960,390 13 January 2020 (13.01.2020) US

(71) Applicant: **LAM RESEARCH CORPORATION** [US/US]; 4650 Cushing Parkway, Fremont, California 94538 (US).

(72) Inventors: **PENG, Gordon**; 1500 Dentona Place, San Jose, California 95118 (US). **ROSSLEE, Craig**; 2310 Shade Tree Lane, San Jose, California 95131 (US). **MAROHL, Dan**; 3461 Outlook CT, San Jose, California 95132 (US).

(74) Agent: **WIGGINS, Michael D.**; Harness, Dickey & Pierce, P.L.C., P.O. Box 828, Bloomfield Hills, Michigan 48303 (US).

(81) Designated States *(unless otherwise indicated, for every kind of national protection available)*: AE, AG, AL, AM, AO, AT, AU, AZ, BA, BB, BG, BH, BN, BR, BW, BY, BZ, CA, CH, CL, CN, CO, CR, CU, CZ, DE, DJ, DK, DM, DO, DZ, EC, EE, EG, ES, FI, GB, GD, GE, GH, GM, GT, HN, HR, HU, ID, IL, IN, IR, IS, IT, JO, JP, KE, KG, KH, KN, KP, KR, KW, KZ, LA, LC, LK, LR, LS, LU, LY, MA, MD, ME, MG, MK, MN, MW, MX, MY, MZ, NA, NG, NI, NO, NZ, OM, PA, PE, PG, PH, PL, PT, QA, RO, RS, RU, RW, SA, SC, SD, SE, SG, SK, SL, ST, SV, SY, TH, TJ, TM, TN, TR, TT, TZ, UA, UG, US, UZ, VC, VN, WS, ZA, ZM, ZW.

(84) Designated States *(unless otherwise indicated, for every kind of regional protection available)*: ARIPO (BW, GH, GM, KE, LR, LS, MW, MZ, NA, RW, SD, SL, ST, SZ, TZ, UG, ZM, ZW), Eurasian (AM, AZ, BY, KG, KZ, RU, TJ, TM), European (AL, AT, BE, BG, CH, CY, CZ, DE, DK, EE, ES, FI, FR, GB, GR, HR, HU, IE, IS, IT, LT, LU, LV, MC, MK, MT, NL, NO, PL, PT, RO, RS, SE, SI, SK, SM,

(54) Title: MULTIZONE GAS DISTRIBUTION PLATE FOR TRENCH PROFILE OPTIMIZATION

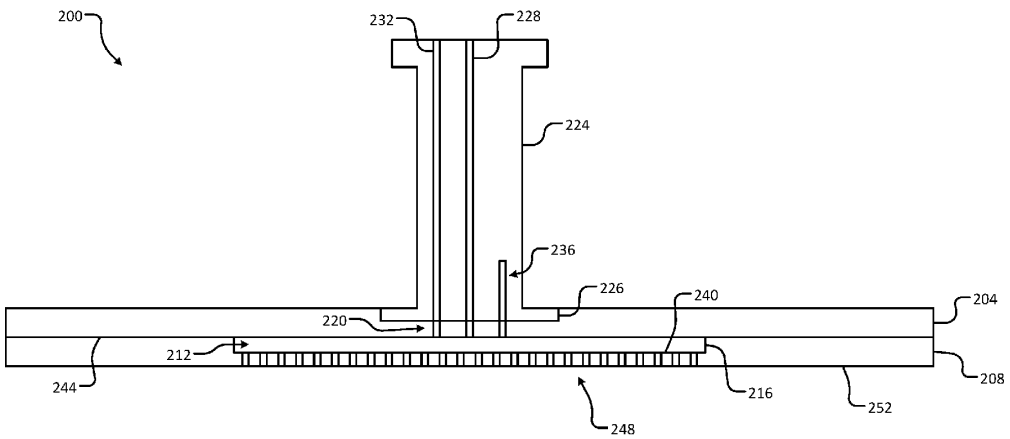

FIG. 2

(57) Abstract: A gas distribution device for a substrate processing system includes an upper plate including a first hole and a plurality of second holes and a lower plate. The lower plate includes a recessed region formed in one of an upper surface of the lower plate and a lower surface of the upper plate. The recessed region defines a plenum volume between the upper plate and the lower plate. The lower plate further includes a raised fence located within the recessed region. The fence separates the plenum volume into a first plenum and a second plenum, the first plenum is in fluid communication with the first hole, and the second plenum is in fluid communication with the plurality of second holes.

[Continued on next page]

WO 2021/146099 A1

TR), OAPI (BF, BJ, CF, CG, CI, CM, GA, GN, GQ, GW, KM, ML, MR, NE, SN, TD, TG).

Declarations under Rule 4.17:

— *as to applicant's entitlement to apply for and be granted a patent (Rule 4.17(ii))*
— *as to the applicant's entitlement to claim the priority of the earlier application (Rule 4.17(iii))*
— *of inventorship (Rule 4.17(iv))*

Published:

— *with international search report (Art. 21(3))*