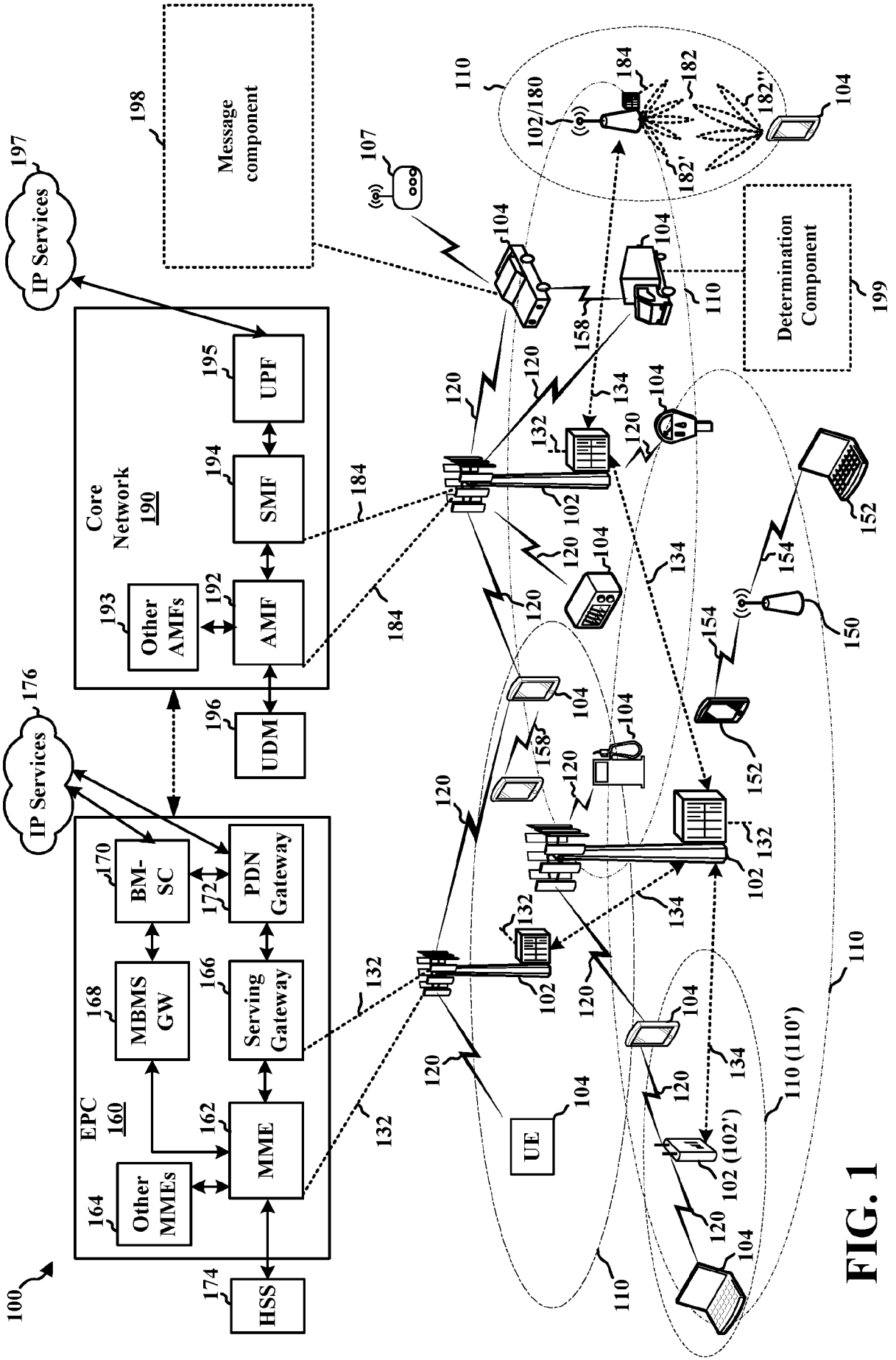
100
EPC
160
Other MMEs
164
MME
162
MBMS GW
168
Serving Gateway
166
BM-SC
170
PDN Gateway
172
HSS
174
IP Services
176
Core Network
190
Other AMFs
193
AMF
192
SMF
194
UPF
195
UDM
196
IP Services
197
Message component
198
Determination Component
199
UE
104
102
102 (102')
102/180
110
110 (110')
120
132
134
150
152
154
158
182
182'
182''
184
107

FIG. 1

FIG. 2

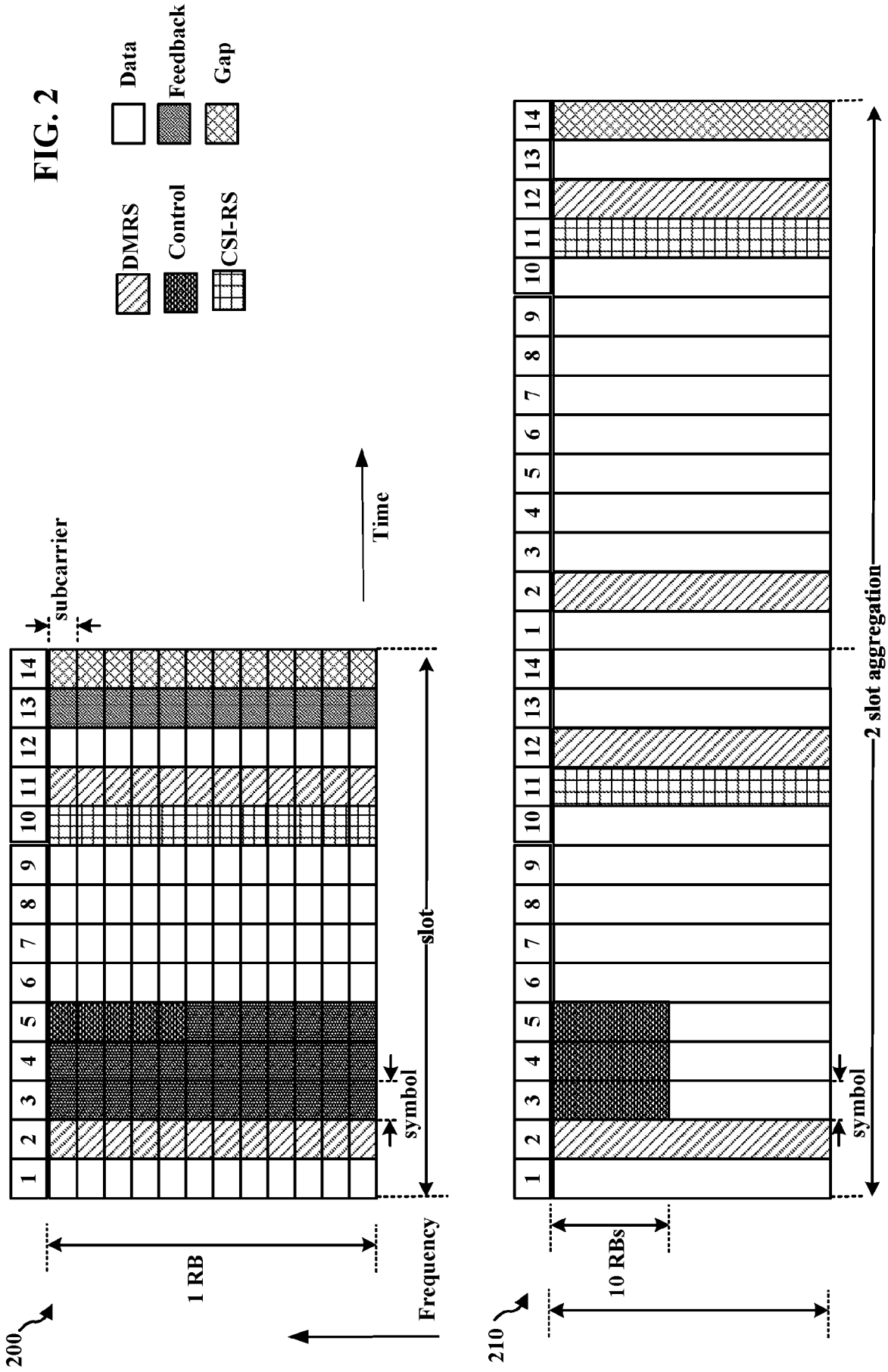
Data
Feedback
Gap
DMRS
Control
CSI-RS
subcarrier
Time
slot
symbol
1 RB
Frequency
200
2 slot aggregation
10 RBs
210

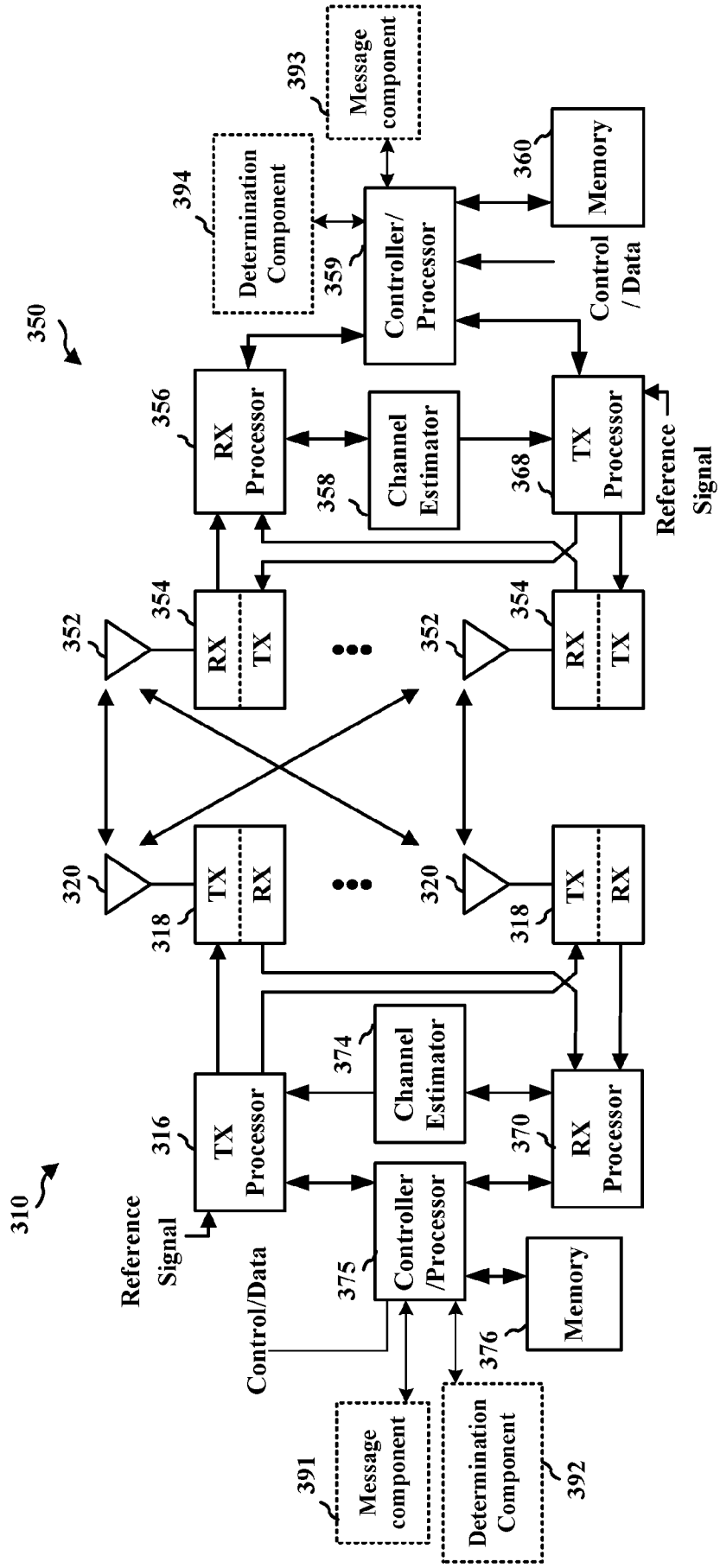
350
393
Message component
394
Determination Component
359
Controller/ Processor
360
Memory
Control / Data
356
RX Processor
358
Channel Estimator
368
TX Processor
Reference Signal
352
354
RX
TX
320
318
TX
RX
310
316
TX Processor
374
Channel Estimator
370
RX Processor
Reference Signal
375
Controller /Processor
Control/Data
376
Memory
391
Message component
392
Determination Component

FIG. 3

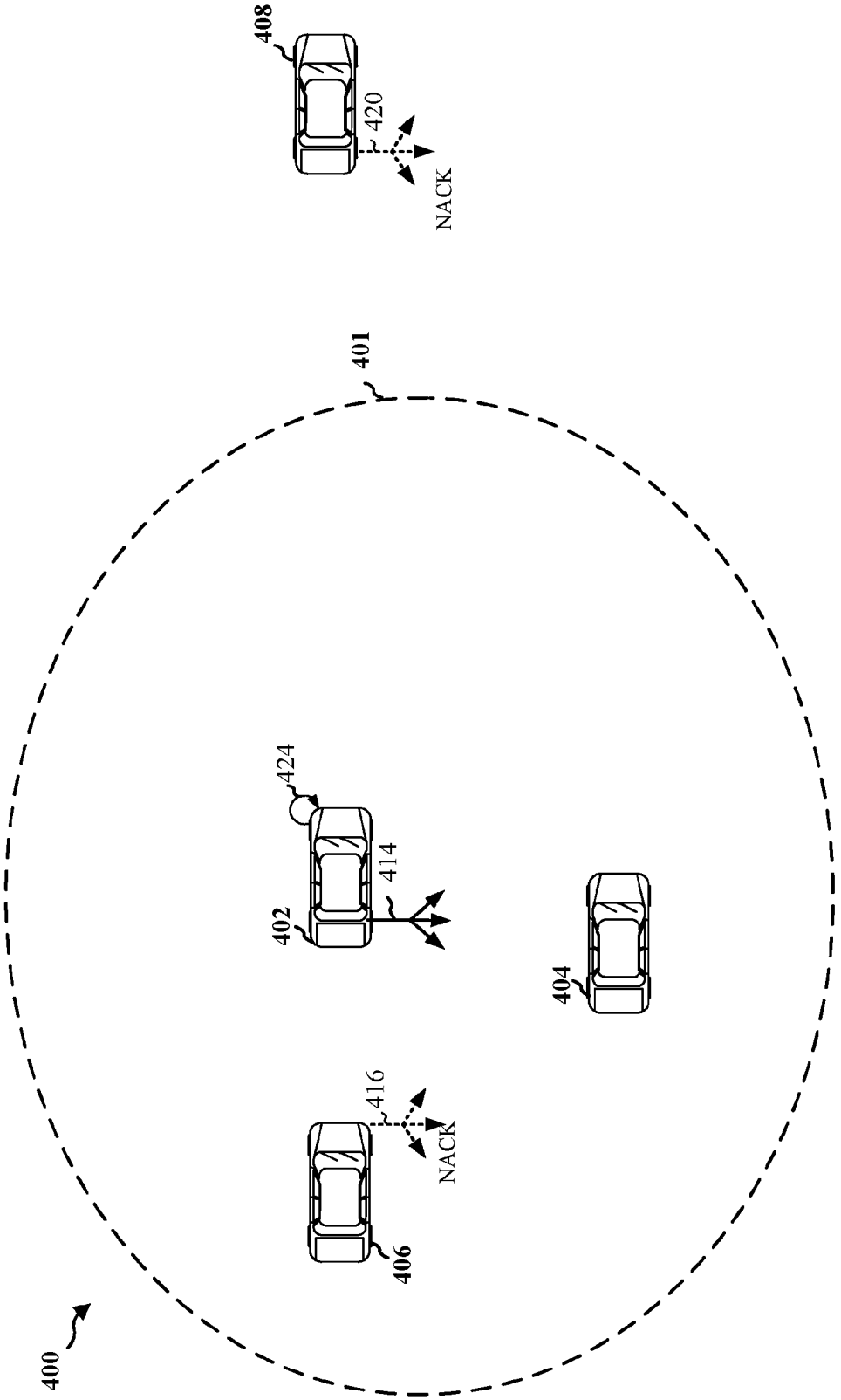

FIG. 4

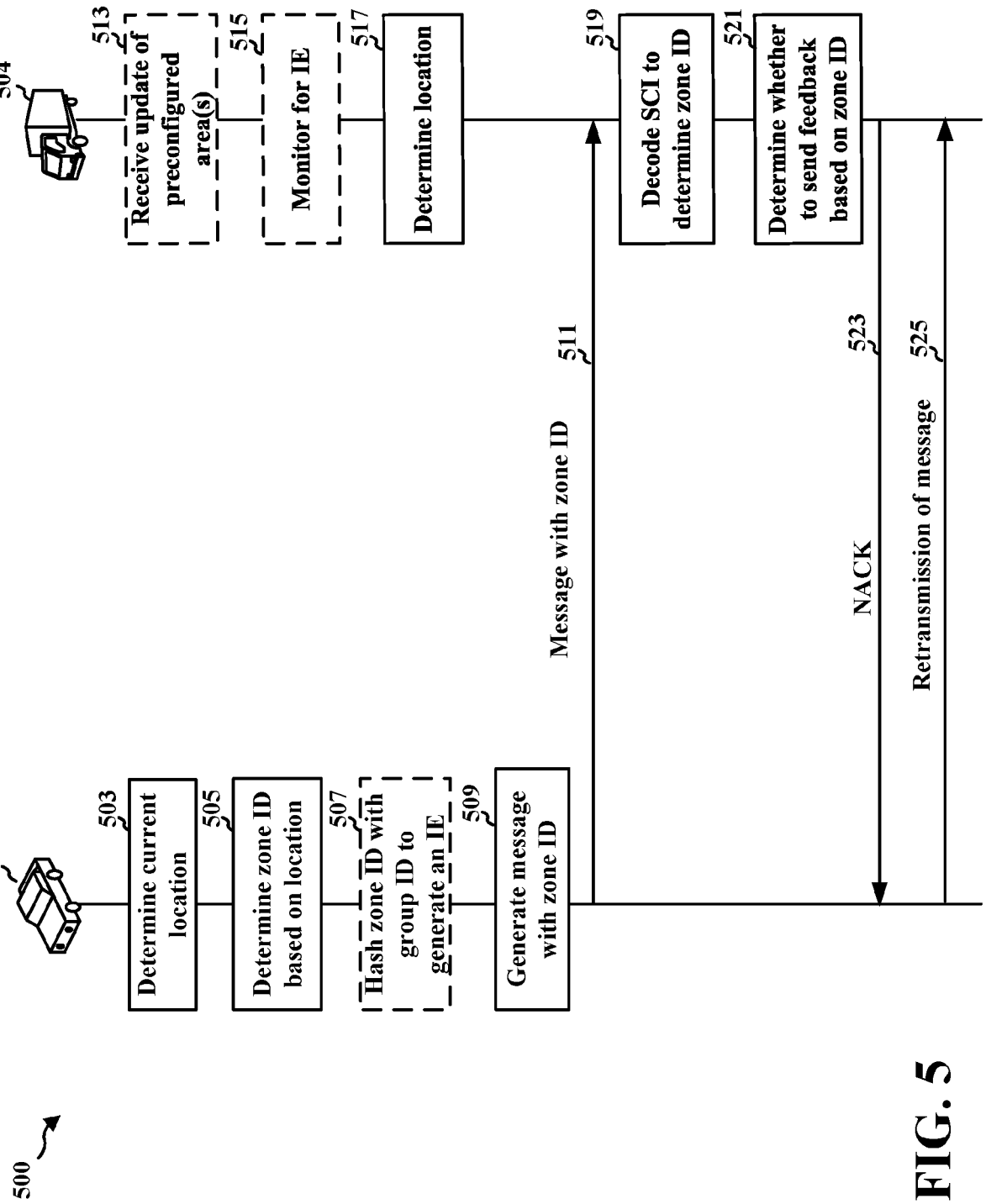
500
502
503
Determine current location
505
Determine zone ID based on location
507
Hash zone ID with group ID to generate an IE
509
Generate message with zone ID
511
Message with zone ID
504
513
Receive update of preconfigured area(s)
515
Monitor for IE
517
Determine location
519
Decode SCI to determine zone ID
521
Determine whether to send feedback based on zone ID
523
NACK
525
Retransmission of message

FIG. 5

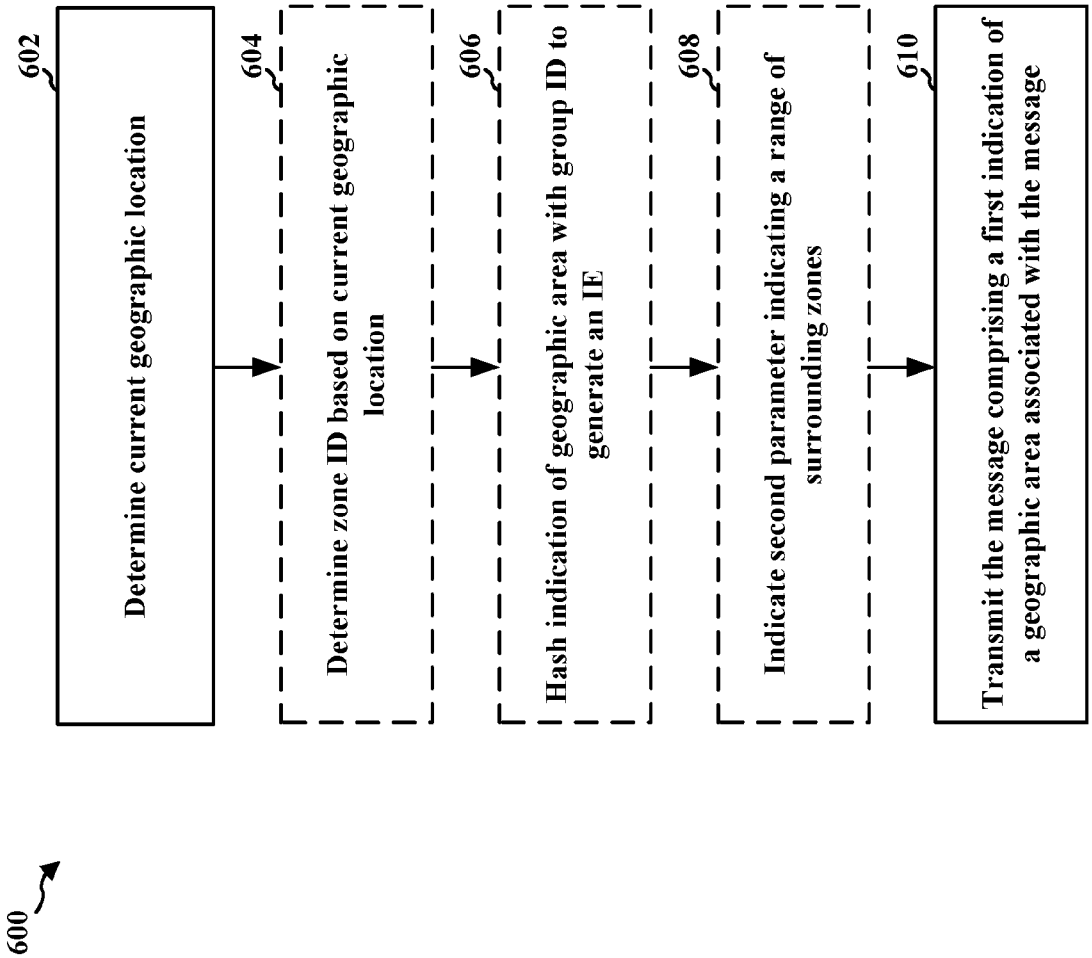
600
602
Determine current geographic location
604
Determine zone ID based on current geographic location
606
Hash indication of geographic area with group ID to generate an IE
608
Indicate second parameter indicating a range of surrounding zones
610
Transmit the message comprising a first indication of a geographic area associated with the message

FIG. 6

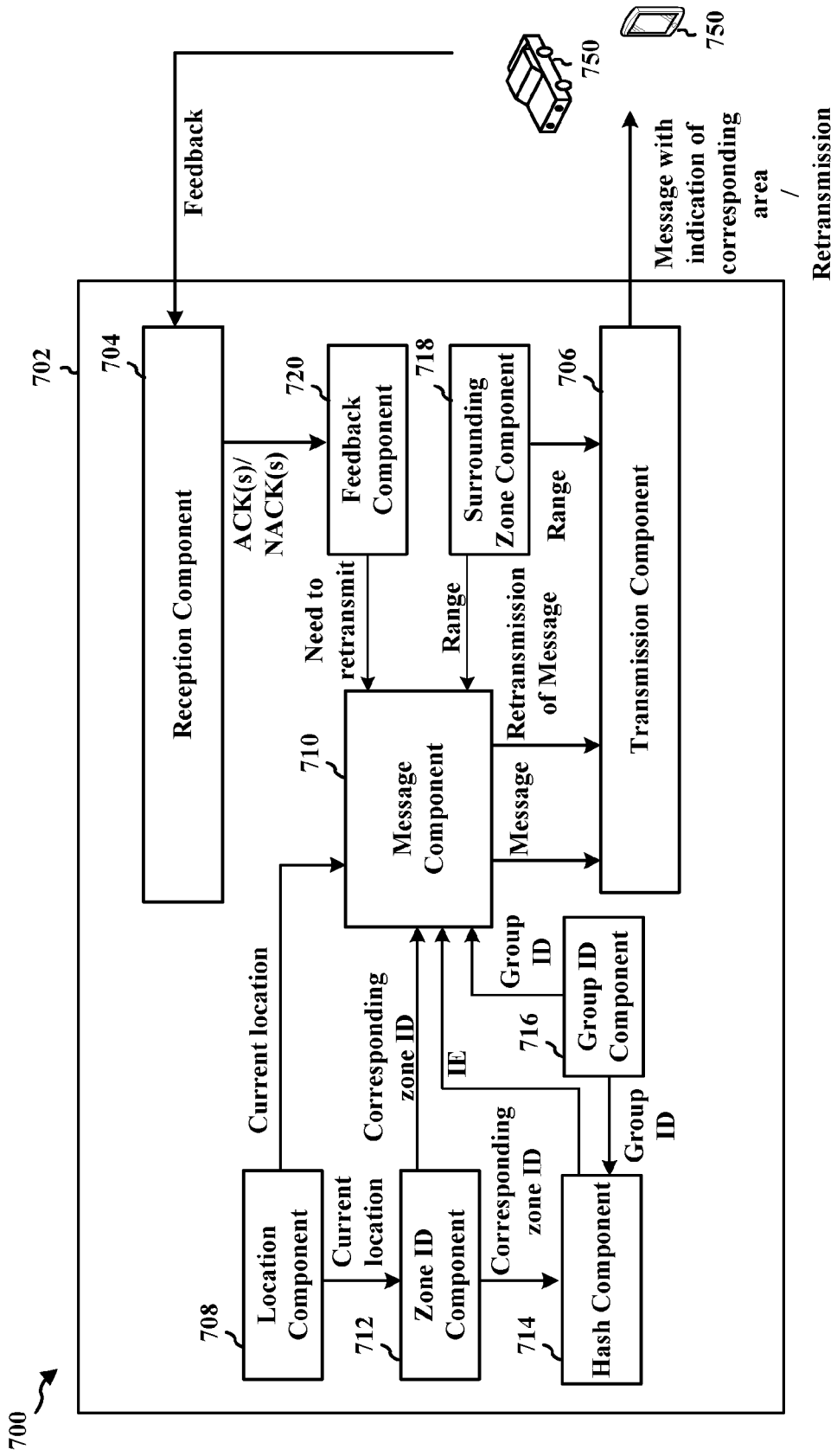
700
702
704
Reception Component
Feedback
ACK(s)/ NACK(s)
720
Feedback Component
718
Surrounding Zone Component
706
Transmission Component
Message with indication of corresponding area / Retransmission
750
750
Need to retransmit
Range
Retransmission of Message
Range
710
Message Component
Message
Current location
Corresponding zone ID
IE
Group ID
716
Group ID Component
Group ID
708
Location Component
Current location
712
Zone ID Component
Corresponding zone ID
714
Hash Component

FIG. 7

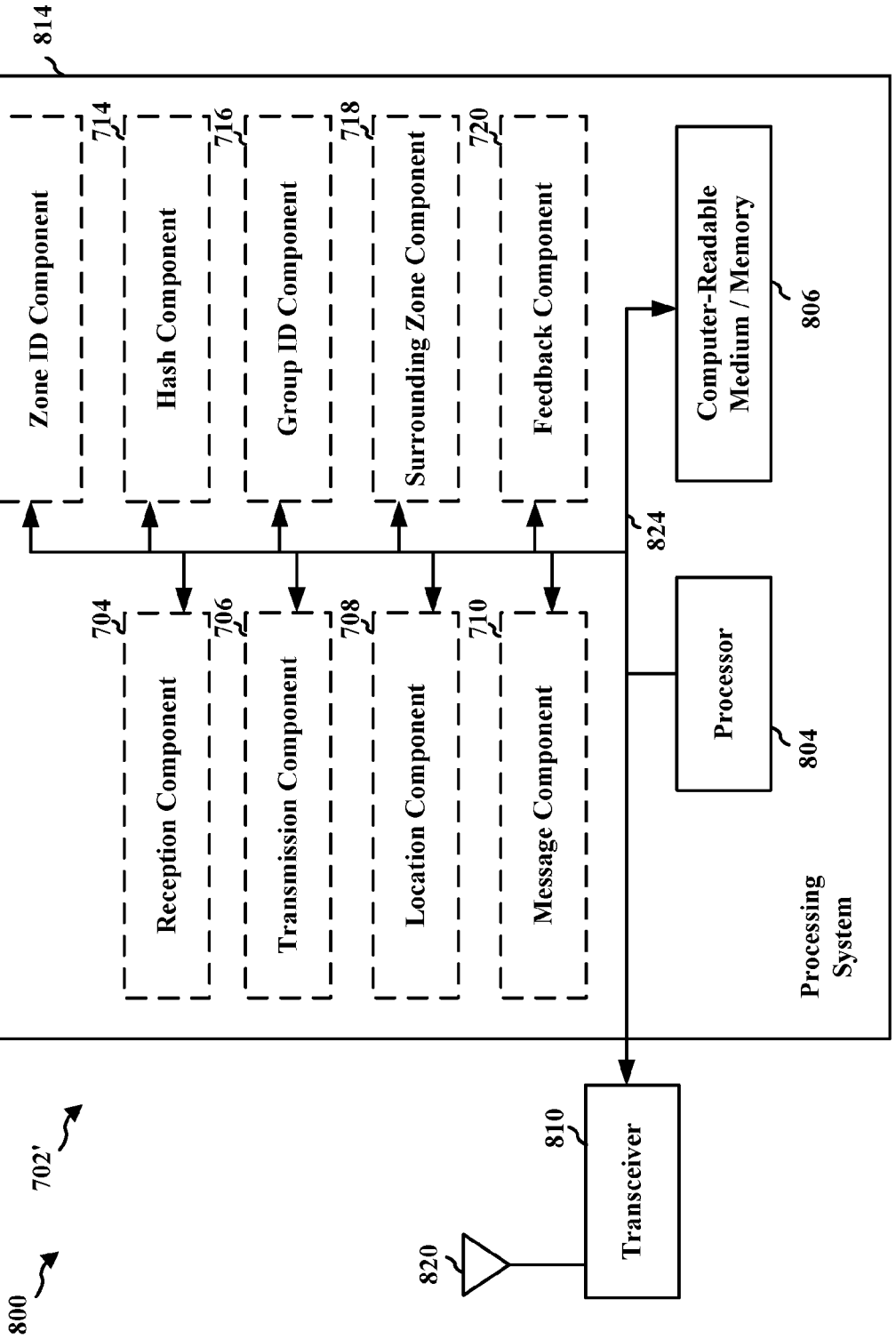
800
702'
814
712
Zone ID Component
714
Hash Component
716
Group ID Component
718
Surrounding Zone Component
720
Feedback Component
704
Reception Component
706
Transmission Component
708
Location Component
710
Message Component
824
Computer-Readable Medium / Memory
806
Processor
804
Processing System
810
Transceiver
820

FIG. 8

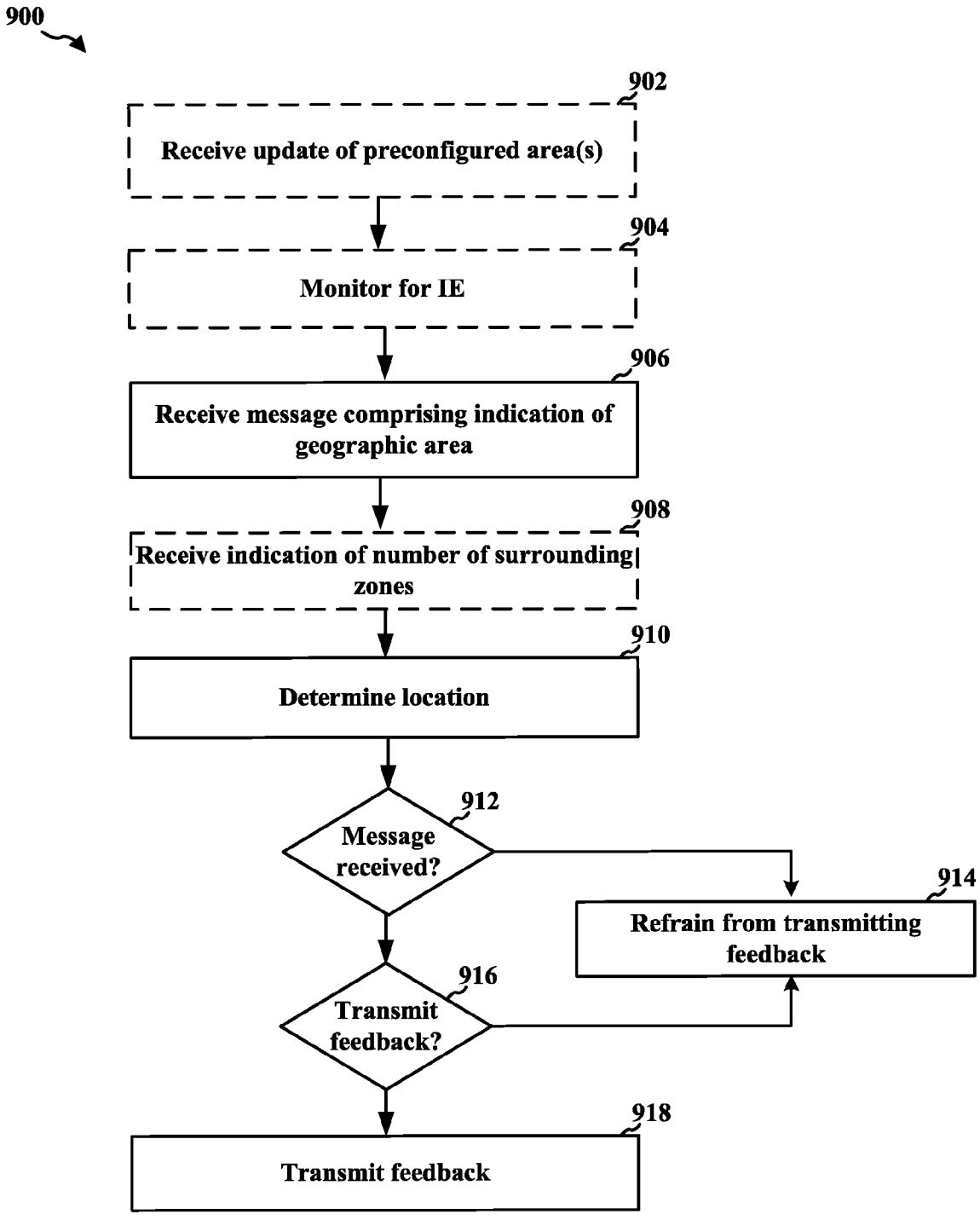
900
902
Receive update of preconfigured area(s)
904
Monitor for IE
906
Receive message comprising indication of geographic area
908
Receive indication of number of surrounding zones
910
Determine location
912
Message received?
914
Refrain from transmitting feedback
916
Transmit feedback?
918
Transmit feedback

FIG. 9

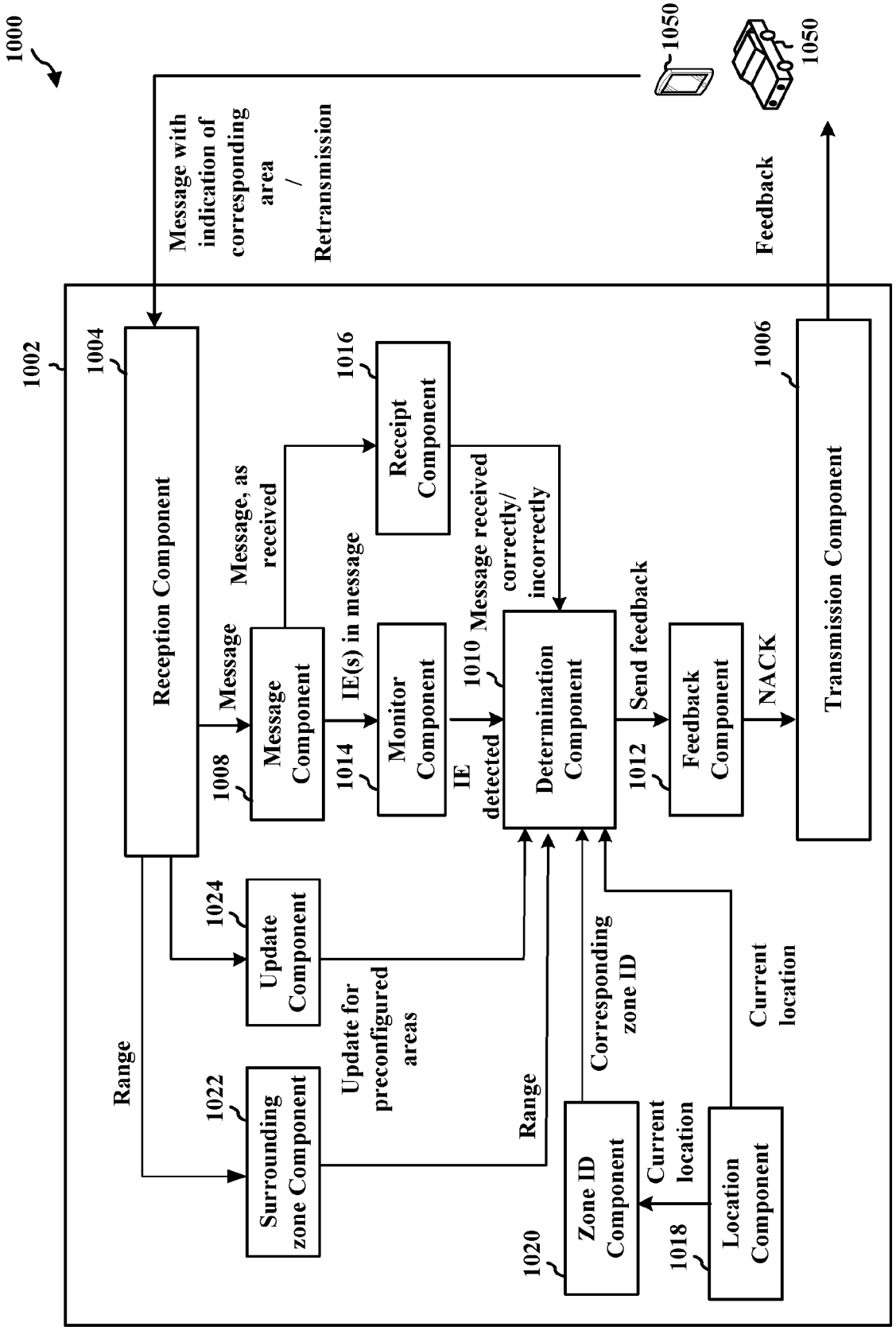
1000
1050
1050
Message with indication of corresponding area / Retransmission
Feedback
1002
1004
Reception Component
1016
Receipt Component
1006
Transmission Component
Message, as received
Message
1008
Message Component
IE(s) in message
1014
Monitor Component
Message received correctly/ incorrectly
1010
IE detected
Determination Component
Send feedback
1012
Feedback Component
NACK
1024
Update Component
Update for preconfigured areas
Range
1022
Surrounding zone Component
Range
Corresponding zone ID
Current location
1020
Zone ID Component
Current location
1018
Location Component

FIG. 10

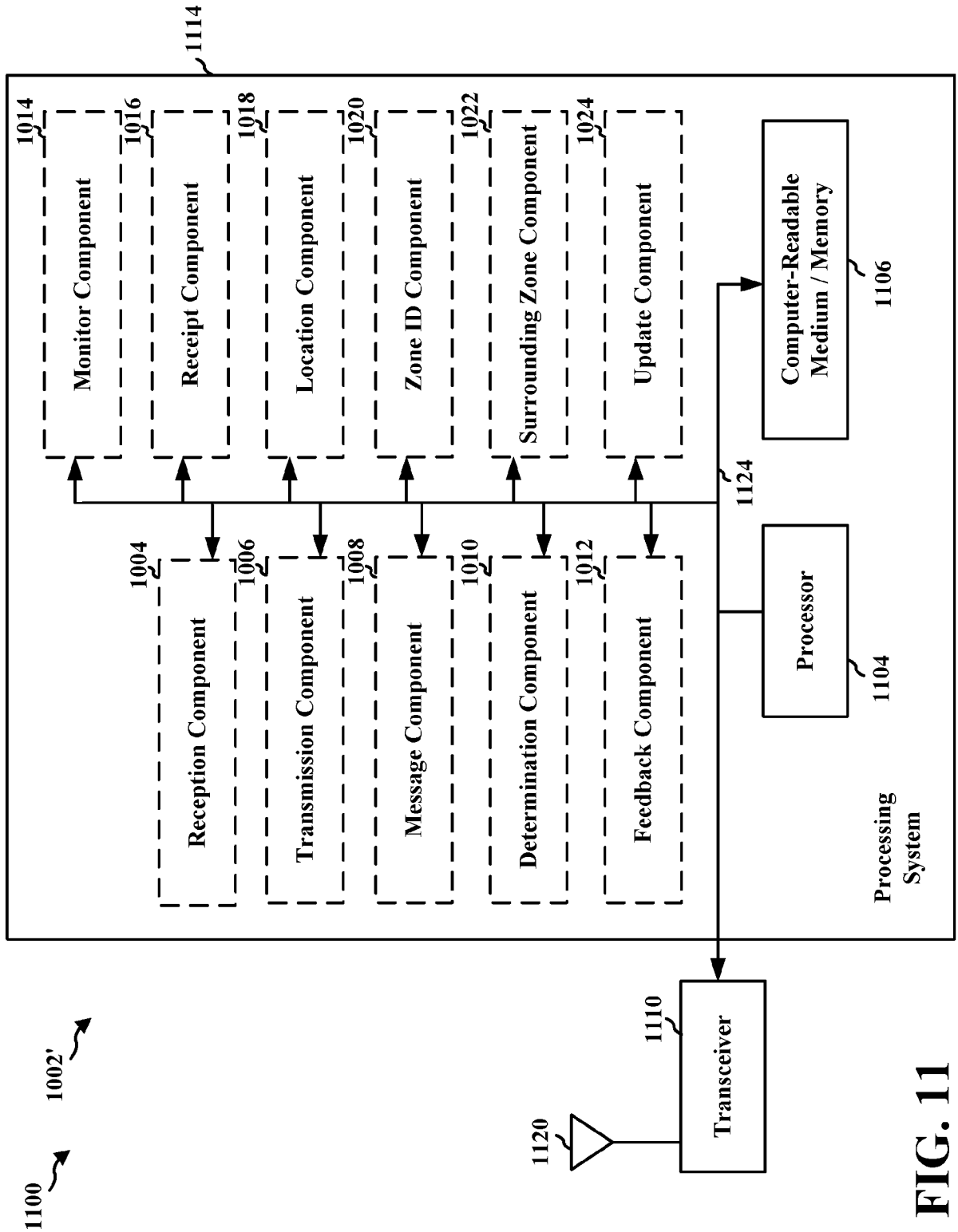
1100
1002'
1114
1014
Monitor Component
1016
Receipt Component
1018
Location Component
1020
Zone ID Component
1022
Surrounding Zone Component
1024
Update Component
1004
Reception Component
1006
Transmission Component
1008
Message Component
1010
Determination Component
1012
Feedback Component
1124
Computer-Readable Medium / Memory
1106
Processor
1104
Processing System
1110
Transceiver
1120

FIG. 11

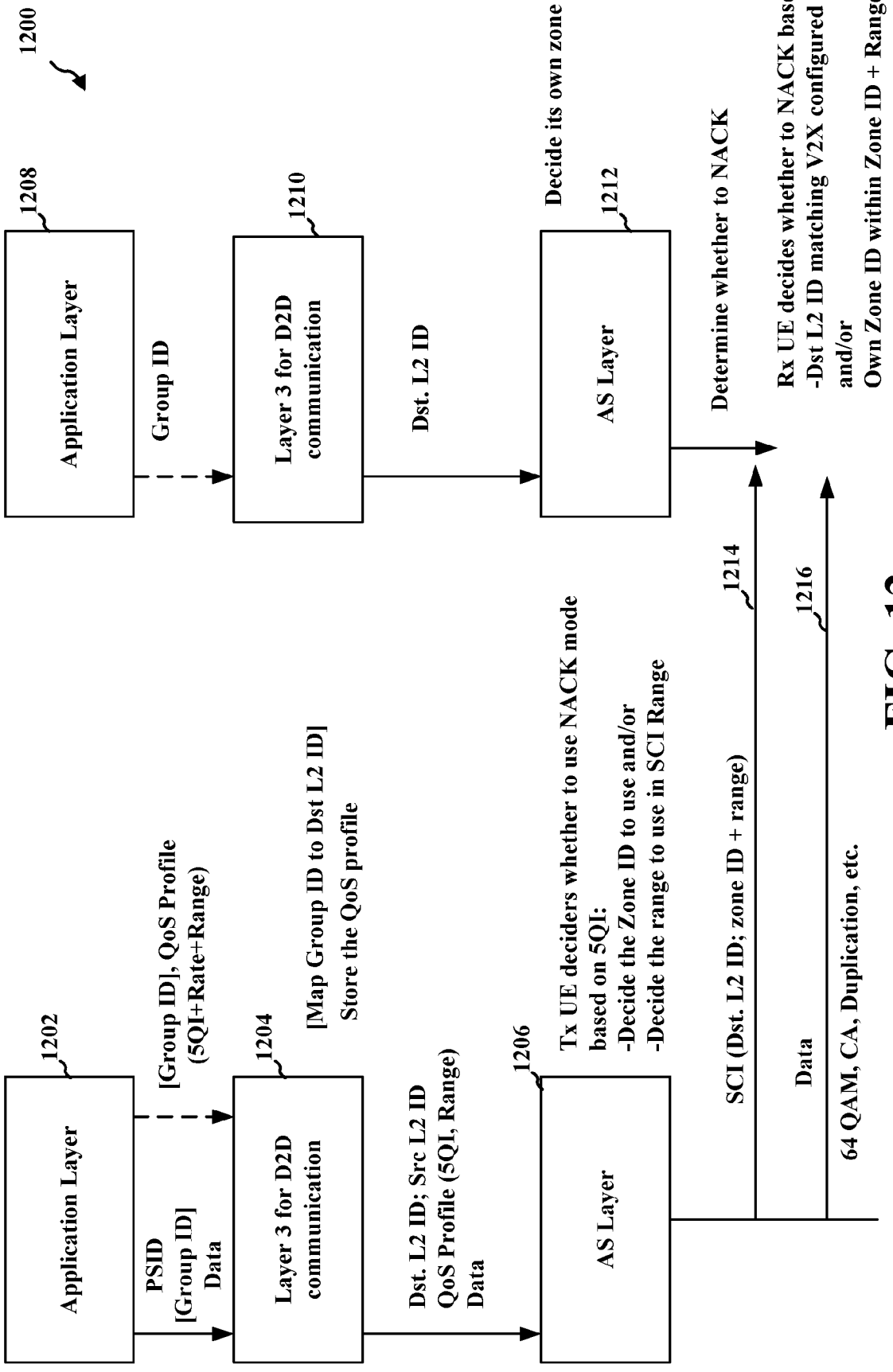
1200
1208
Application Layer
Group ID
1210
Layer 3 for D2D communication
Dst. L2 ID
Decide its own zone ID
1212
AS Layer
Determine whether to NACK
Rx UE decides whether to NACK based on:
-Dst L2 ID matching V2X configured L2 ID and/or
Own Zone ID within Zone ID + Range
1202
Application Layer
PSID
[Group ID]
Data
[Group ID], QoS Profile
(5QI+Rate+Range)
1204
Layer 3 for D2D communication
[Map Group ID to Dst L2 ID]
Store the QoS profile
Dst. L2 ID; Src L2 ID
QoS Profile (5QI, Range)
Data
1206
AS Layer
Tx UE deciders whether to use NACK mode based on 5QI:
-Decide the Zone ID to use and/or
-Decide the range to use in SCI Range
SCI (Dst. L2 ID; zone ID + range)
1214
Data
1216
64 QAM, CA, Duplication, etc.

FIG. 12

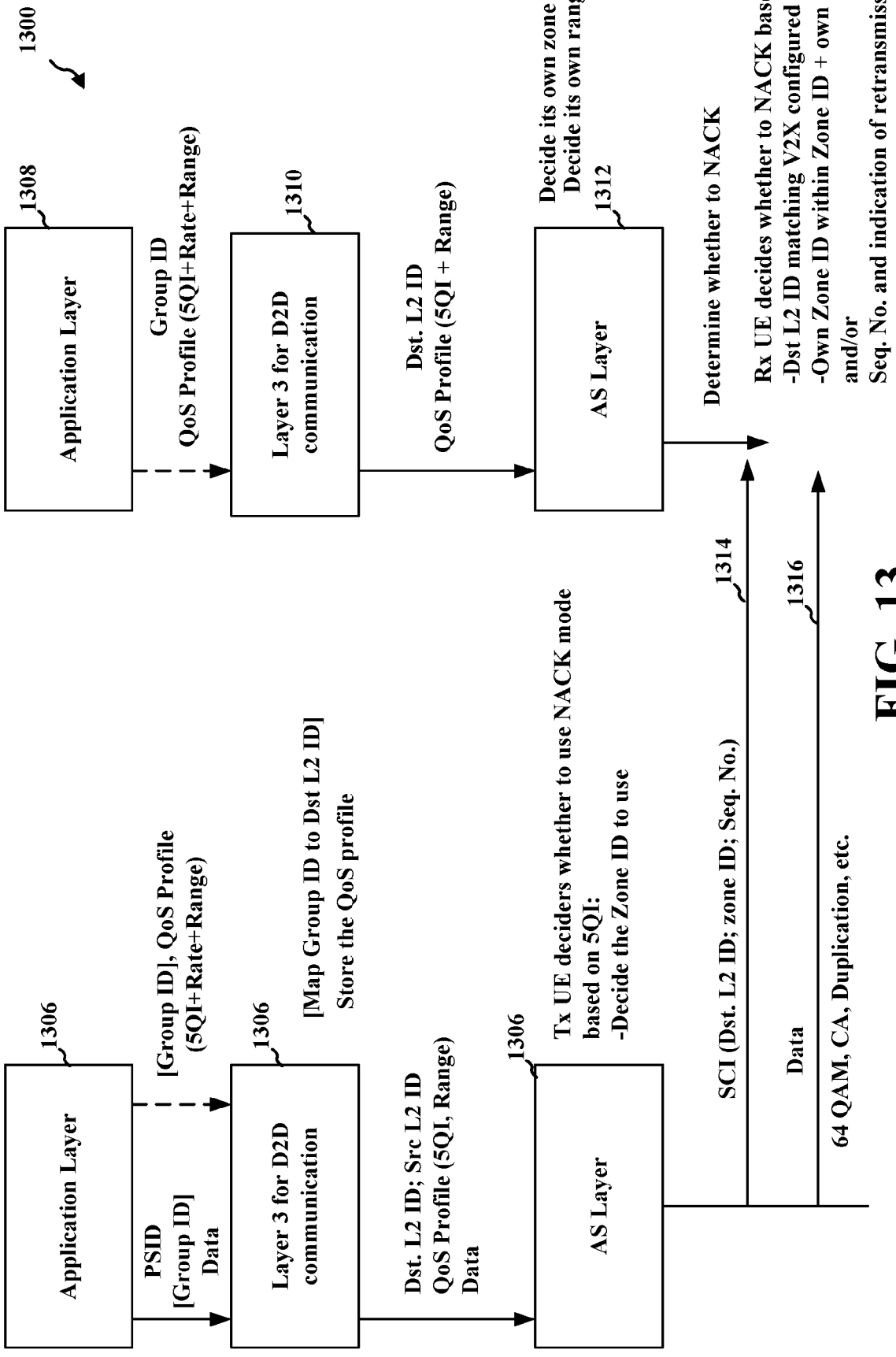
1300
1308
Application Layer
Group ID
QoS Profile (5QI+Rate+Range)
1310
Layer 3 for D2D communication
Dst. L2 ID
QoS Profile (5QI + Range)
Decide its own zone ID
Decide its own range
1312
AS Layer
Determine whether to NACK
Rx UE decides whether to NACK based on:
-Dst L2 ID matching V2X configured L2 ID
-Own Zone ID within Zone ID + own range, and/or
Seq. No. and indication of retransmission
1306
Application Layer
PSID
[Group ID]
Data
[Group ID], QoS Profile (5QI+Rate+Range)
1306
Layer 3 for D2D communication
[Map Group ID to Dst L2 ID]
Store the QoS profile
Dst. L2 ID; Src L2 ID
QoS Profile (5QI, Range)
Data
1306
AS Layer
Tx UE deciders whether to use NACK mode based on 5QI:
-Decide the Zone ID to use
1314
SCI (Dst. L2 ID; zone ID; Seq. No.)
1316
Data
64 QAM, CA, Duplication, etc.

FIG. 13