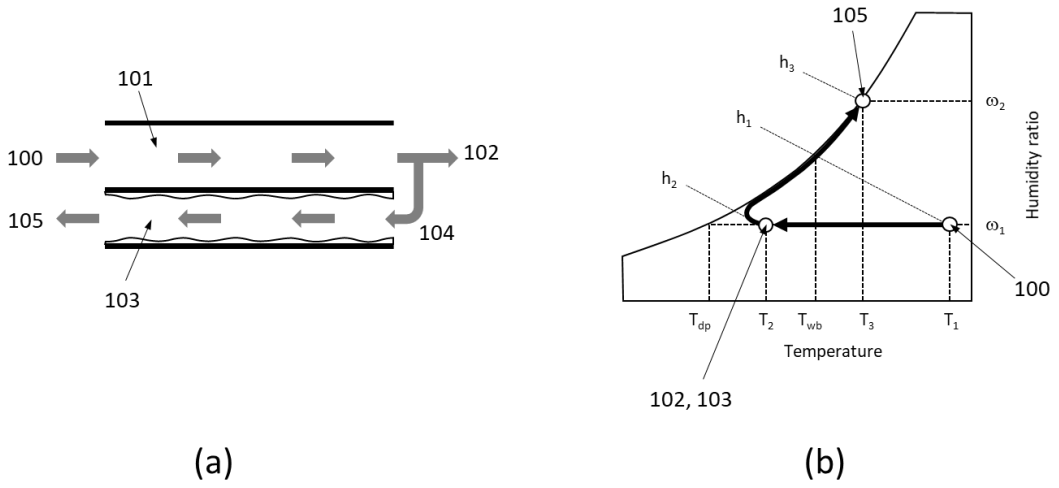

Figure 1

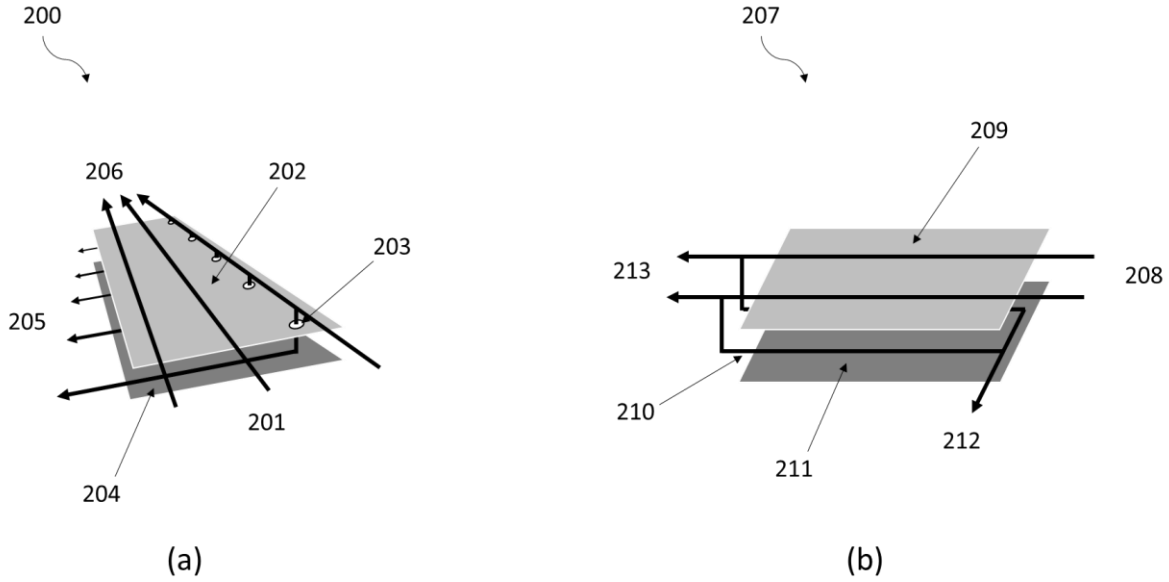

Figure 2

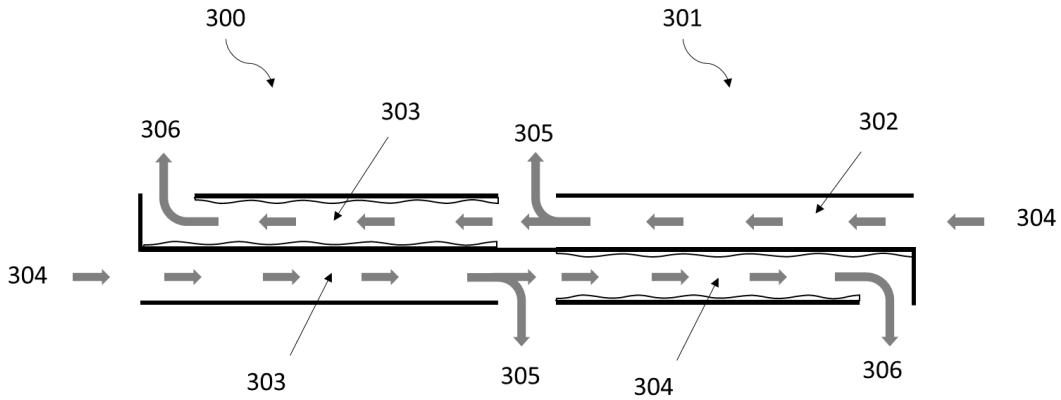

Figure 3

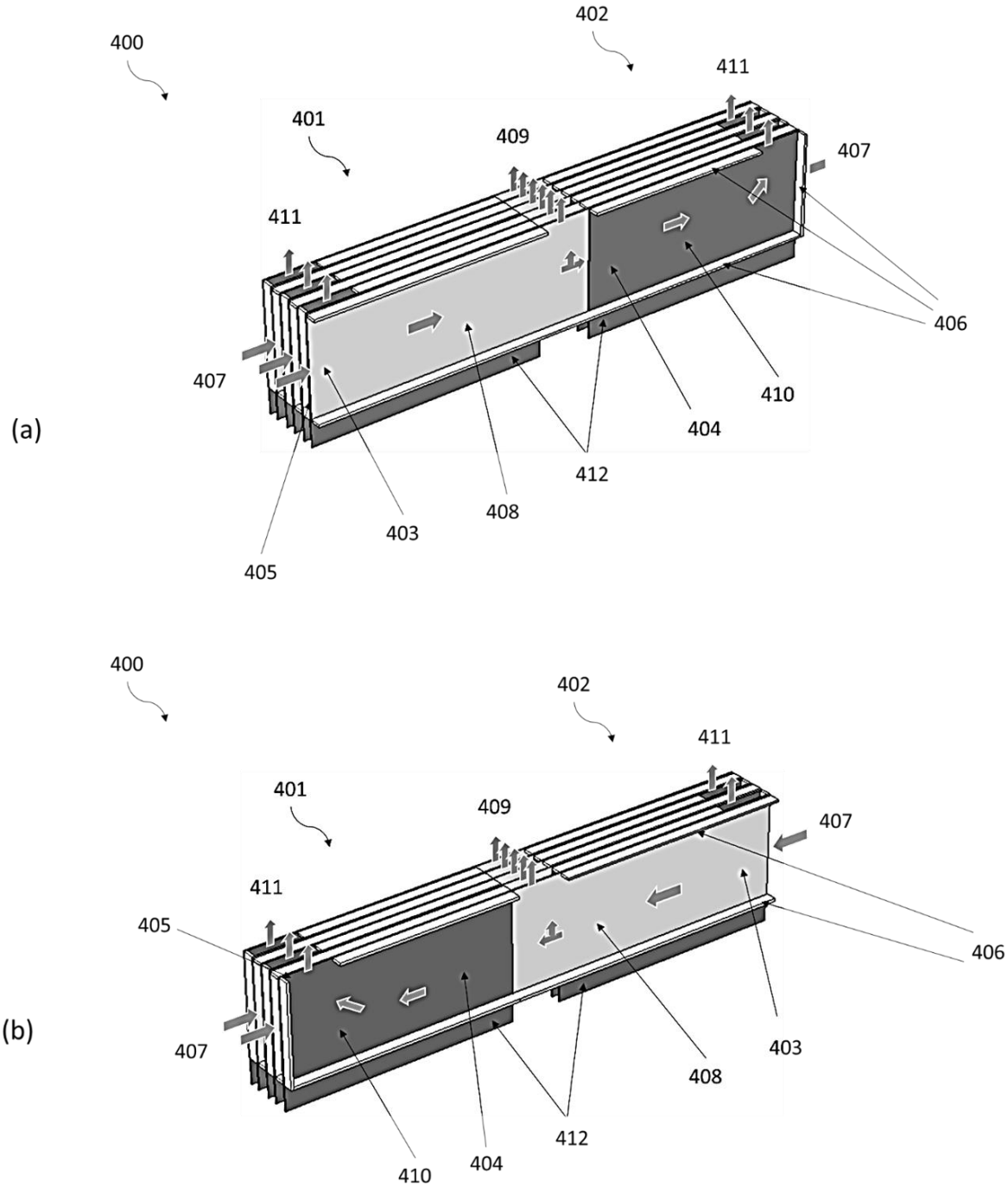
(a)
400
402
411
401
409
407
411
406
407
410
404
412
403
408
405
(b)
400
402
411
401
409
407
411
405
406
407
403
408
412
410
404

Figure 4

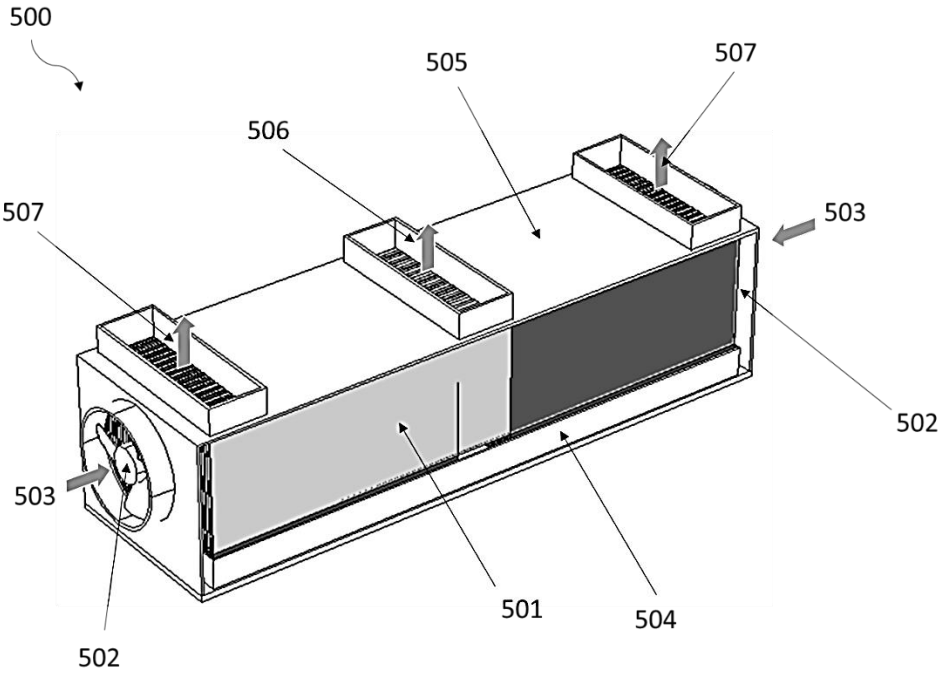

Figure 5