(12) INTERNATIONAL APPLICATION PUBLISHED UNDER THE PATENT COOPERATION TREATY (PCT)

(19) World Intellectual Property Organization
International Bureau

(43) International Publication Date
27 January 2011 (27.01.2011)

PCT

(10) International Publication Number
WO 2011/011129 A4

(51) International Patent Classification:
C23C 14/06 (2006.01) *B23B 27/00* (2006.01)
C23C 16/30 (2006.01)

(21) International Application Number:
PCT/US2010/038808

(22) International Filing Date:
16 June 2010 (16.06.2010)

(25) Filing Language: English

(26) Publication Language: English

(30) Priority Data:
12/506,782 21 July 2009 (21.07.2009) US

(71) Applicant *(for all designated States except US)*: **KENNAMETAL INC.** [US/US]; P.O. Box 231, 1600 Technology Way, Latrobe, Pennsylvania 15650-0231 (US).

(72) Inventors; and

(75) Inventors/Applicants *(for US only)*: **BRAHMANDAM, Sudhir** [IN/US]; 116 Tanglewood Court, Irwin, Pennsylvania 15642 (US). **SIDDLE, David R.** [US/US]; 1002 Dunedin Drive, Greensburg, Pennsylvania 15601 (US). **LEICHT, Peter R.** [DE/US]; 329 Dolomite Court, Latrobe, Pennsylvania 15650 (US). **SPITSBERG, Irene** [US/US]; 4081 Manor Oaks Court, Export, Pennsylvania 15632 (US).

(74) Agents: **GORDON, Matthew, W.** et al.; Kennametal Inc., 1600 Technology Way, Latrobe, Pennsylvania 15650-0231 (US).

(81) Designated States *(unless otherwise indicated, for every kind of national protection available)*: AE, AG, AL, AM, AO, AT, AU, AZ, BA, BB, BG, BH, BR, BW, BY, BZ, CA, CH, CL, CN, CO, CR, CU, CZ, DE, DK, DM, DO, DZ, EC, EE, EG, ES, FI, GB, GD, GE, GH, GM, GT, HN, HR, HU, ID, IL, IN, IS, JP, KE, KG, KM, KN, KP, KR, KZ, LA, LC, LK, LR, LS, LT, LU, LY, MA, MD, ME, MG, MK, MN, MW, MX, MY, MZ, NA, NG, NI, NO, NZ, OM, PE, PG, PH, PL, PT, RO, RS, RU, SC, SD, SE, SG, SK, SL, SM, ST, SV, SY, TH, TJ, TM, TN, TR, TT, TZ, UA, UG, US, UZ, VC, VN, ZA, ZM, ZW.

(84) Designated States *(unless otherwise indicated, for every kind of regional protection available)*: ARIPO (BW, GH, GM, KE, LR, LS, MW, MZ, NA, SD, SL, SZ, TZ, UG, ZM, ZW), Eurasian (AM, AZ, BY, KG, KZ, MD, RU, TJ, TM), European (AL, AT, BE, BG, CH, CY, CZ, DE, DK, EE, ES, FI, FR, GB, GR, HR, HU, IE, IS, IT, LT, LU, LV, MC, MK, MT, NL, NO, PL, PT, RO, SE, SI, SK,

[Continued on next page]

(54) Title: COATED TOOLING

(57) Abstract: A coated forming tool (10) including a tool component (12) and a wear resistant coating (14) on at least a portion of the tool component. The wear resistant coating (14) includes a bottom coating layer (16) and a top coating layer (18). The top coating layer (18) has a thickness from about 1 m to about 12 m and the coating (14) has a thickness ratio of the bottom coating layer thickness to the top coating layer thickness from about 0.5 to about 5.

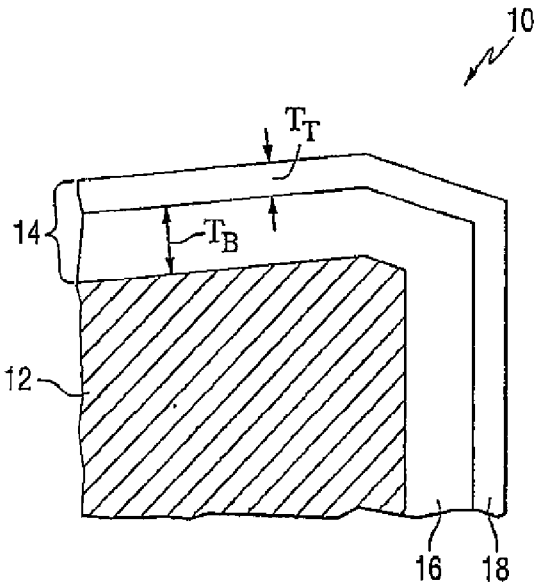

FIG. 1

WO 2011/011129 A4

SM, TR), OAPI (BF, BJ, CF, CG, CI, CM, GA, GN, GQ, GW, ML, MR, NE, SN, TD, TG).

(88) Date of publication of the international search report: 31 March 2011

Published:

Date of publication of the amended claims: 26 May 2011

— *with international search report (Art. 21(3))*

— *with amended claims (Art. 19(1))*