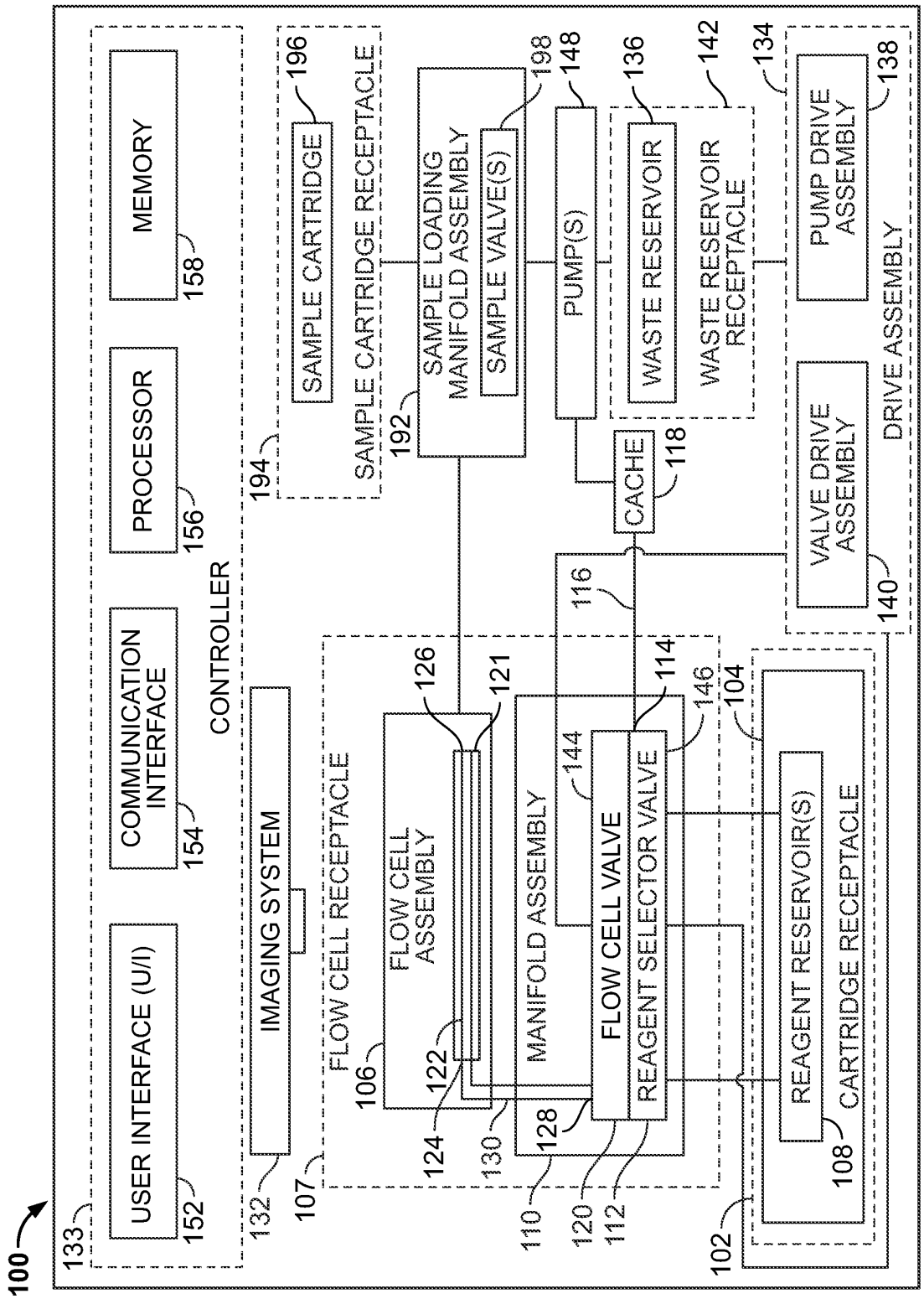
100
133
CONTROLLER
USER INTERFACE (U/I)
152
COMMUNICATION INTERFACE
154
PROCESSOR
156
MEMORY
158
IMAGING SYSTEM
132
107
FLOW CELL RECEPTACLE
106
FLOW CELL ASSEMBLY
126
121
124
122
130
MANIFOLD ASSEMBLY
144
110
128
FLOW CELL VALVE
120
REAGENT SELECTOR VALVE
112
114
146
116
104
102
REAGENT RESERVOIR(S)
CARTRIDGE RECEPTACLE
108
194
SAMPLE CARTRIDGE RECEPTACLE
SAMPLE CARTRIDGE
196
192
SAMPLE LOADING MANIFOLD ASSEMBLY
SAMPLE VALVE(S)
198
PUMP(S)
148
CACHE
118
WASTE RESERVOIR
136
WASTE RESERVOIR RECEPTACLE
142
134
DRIVE ASSEMBLY
VALVE DRIVE ASSEMBLY
140
PUMP DRIVE ASSEMBLY
138

FIG. 1A

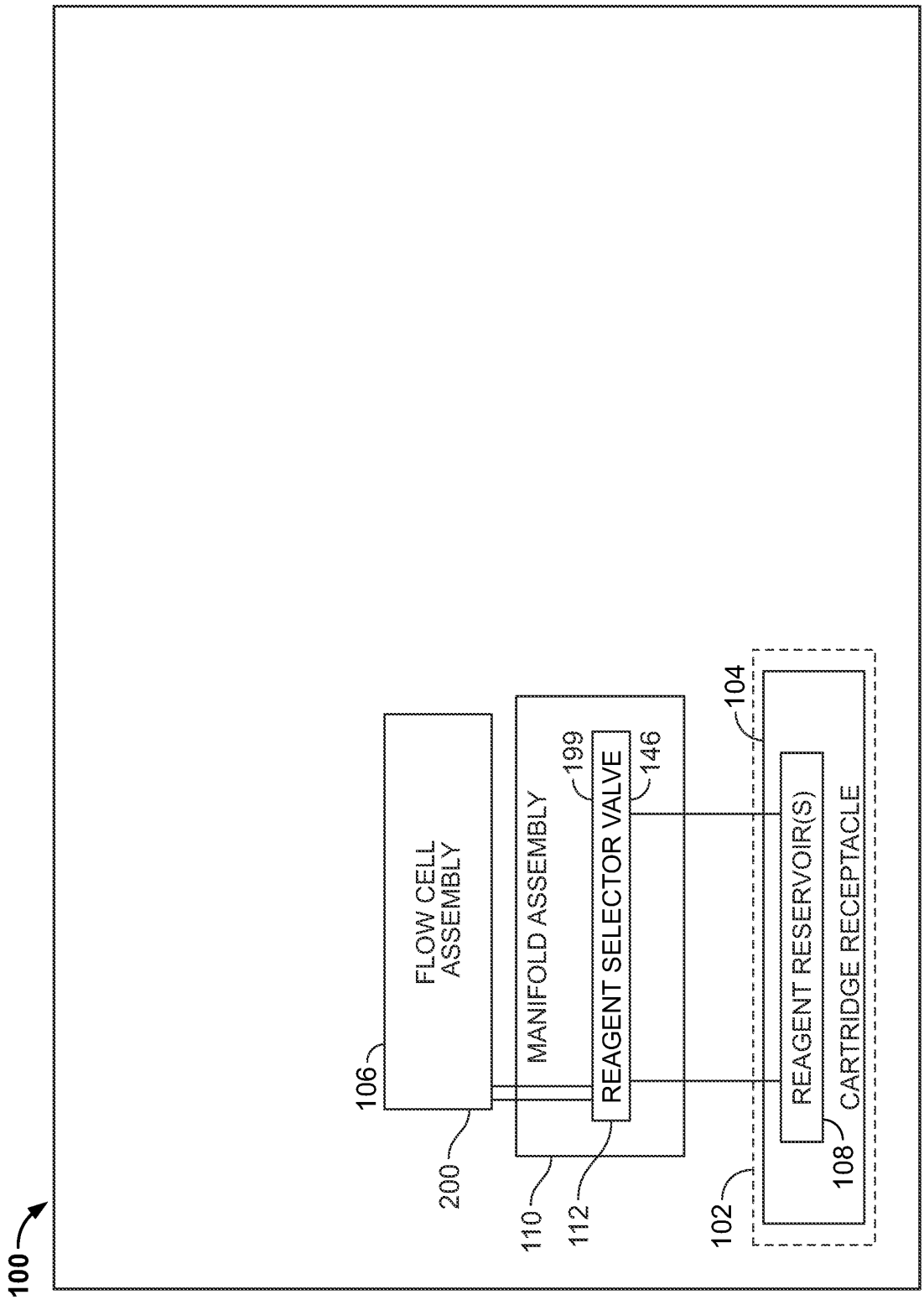
100
FLOW CELL ASSEMBLY
106
200
MANIFOLD ASSEMBLY
199
110
REAGENT SELECTOR VALVE
146
112
104
REAGENT RESERVOIR(S)
CARTRIDGE RECEPTACLE
108
102

FIG. 1B

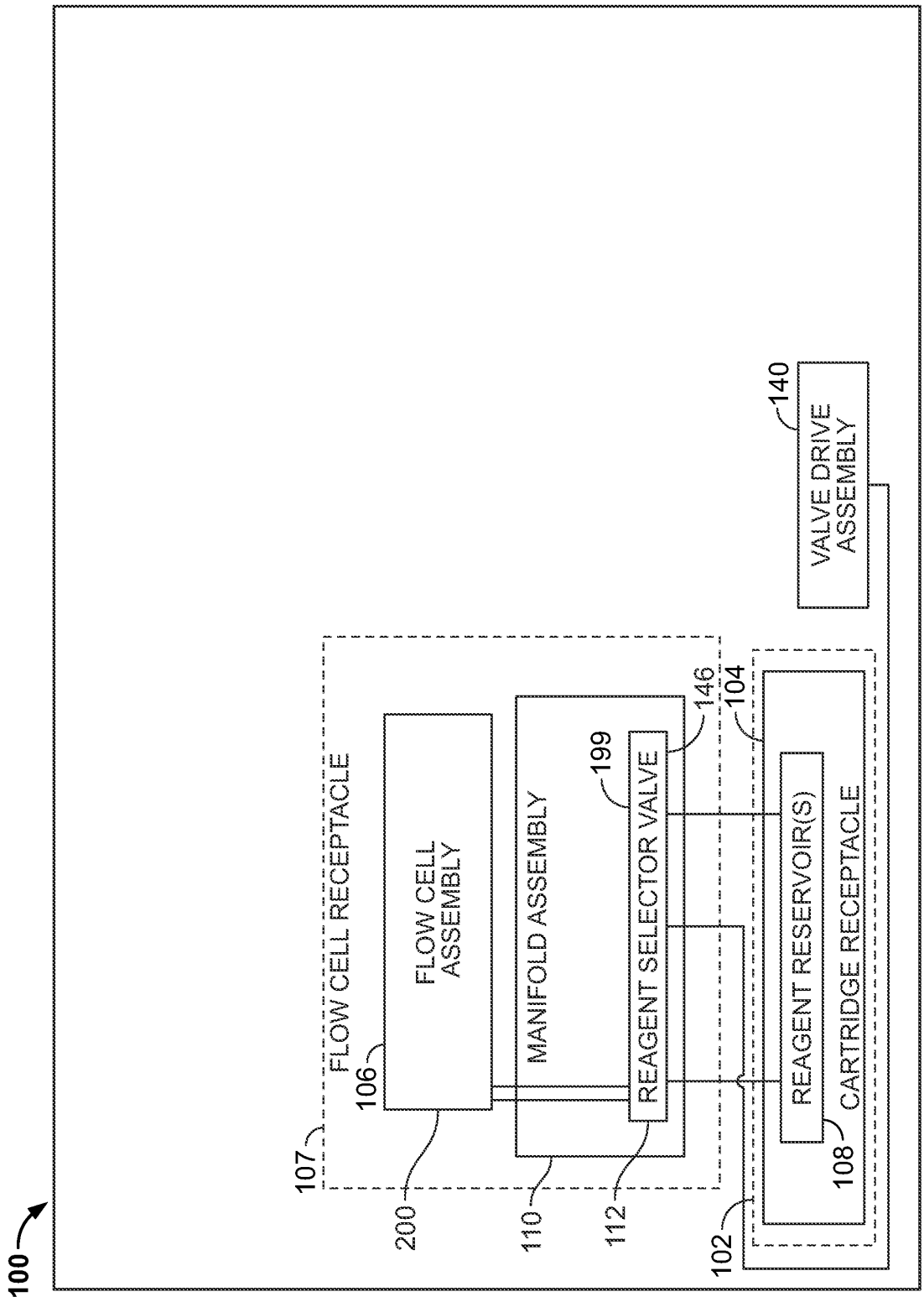
100
FLOW CELL RECEPTACLE
107
FLOW CELL ASSEMBLY
106
200
MANIFOLD ASSEMBLY
110
REAGENT SELECTOR VALVE
199
112
146
104
REAGENT RESERVOIR(S)
108
CARTRIDGE RECEPTACLE
102
VALVE DRIVE ASSEMBLY
140

FIG. 1C

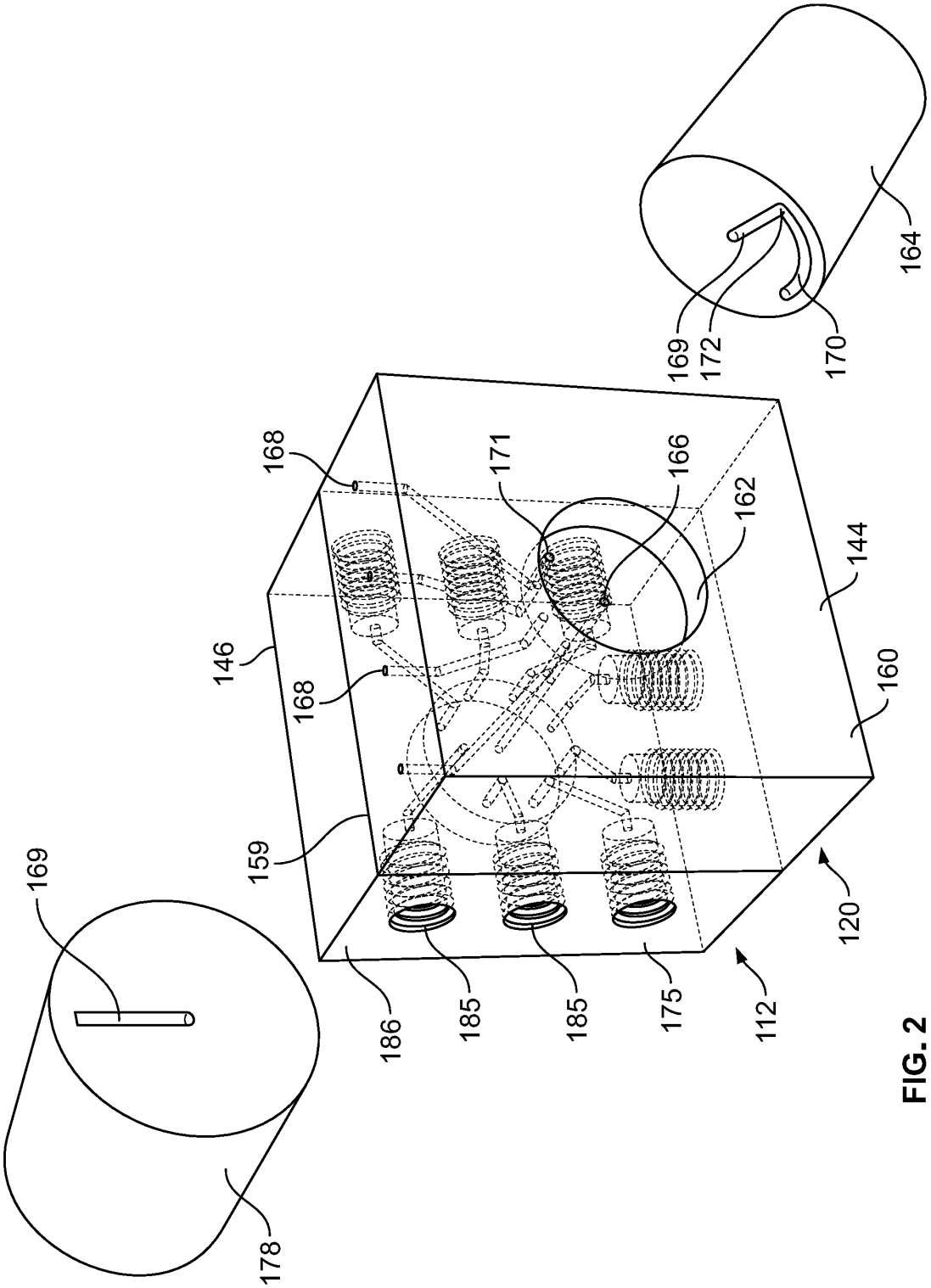
169
178
159
168
146
168
171
166
162
144
160
120
112
175
185
185
186
169
172
170
164

FIG. 2

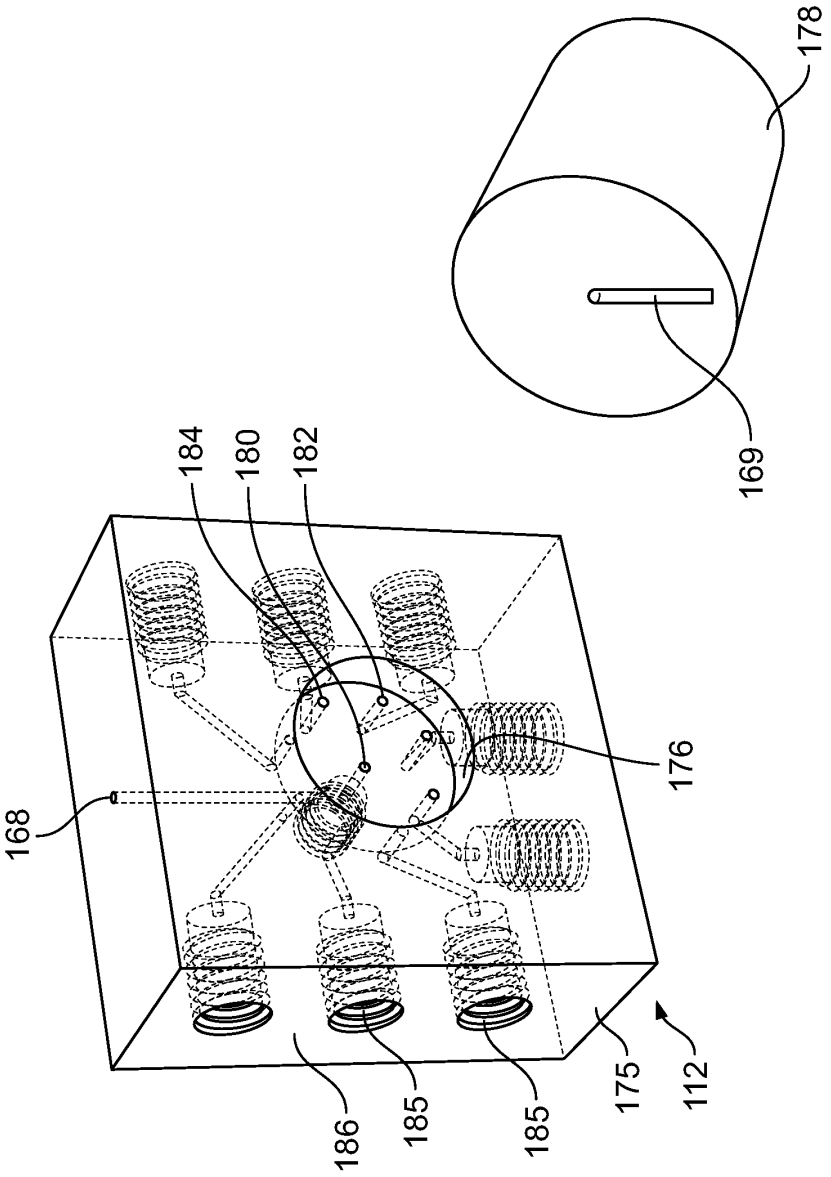

FIG. 3

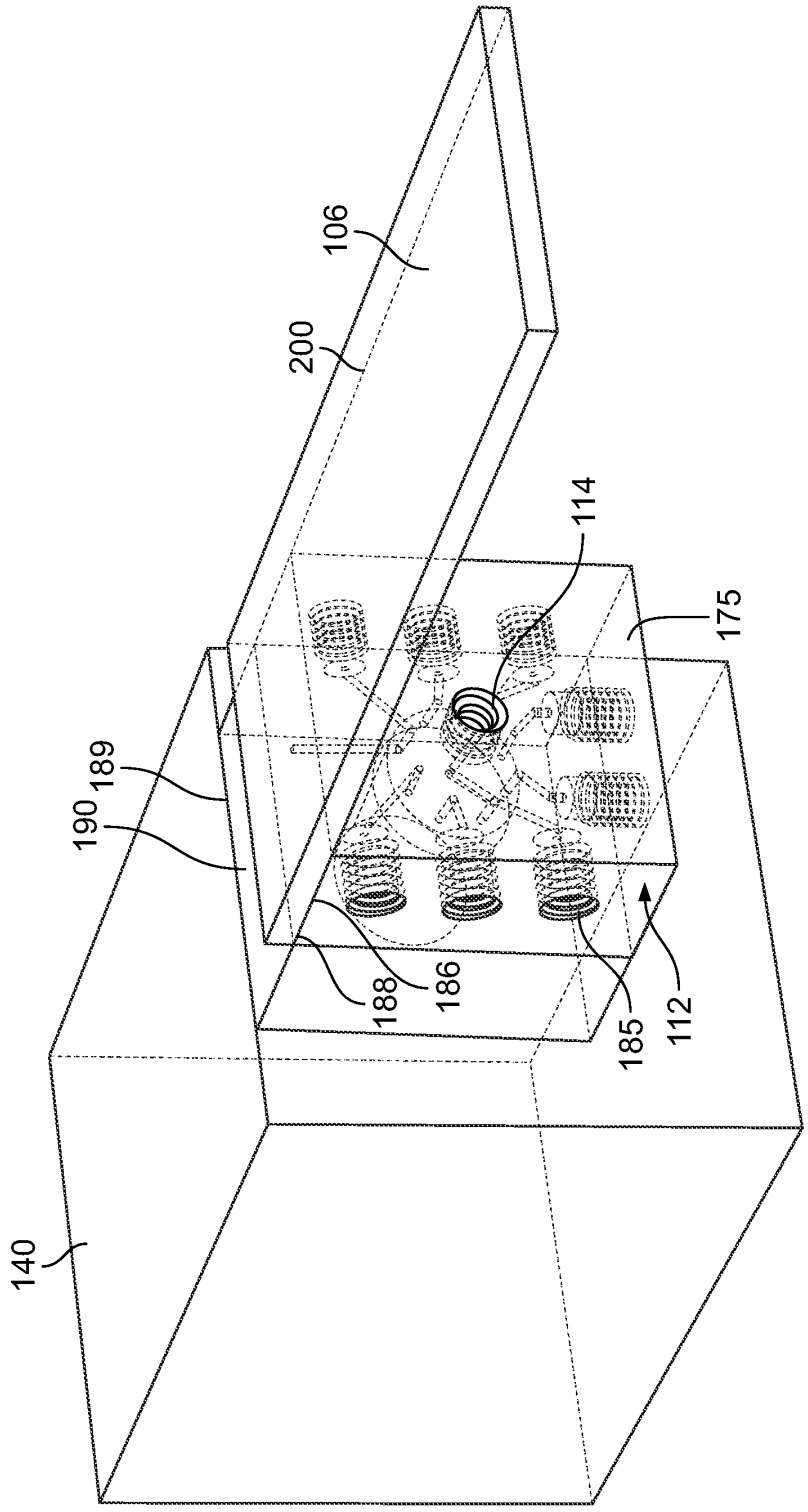

FIG. 4A

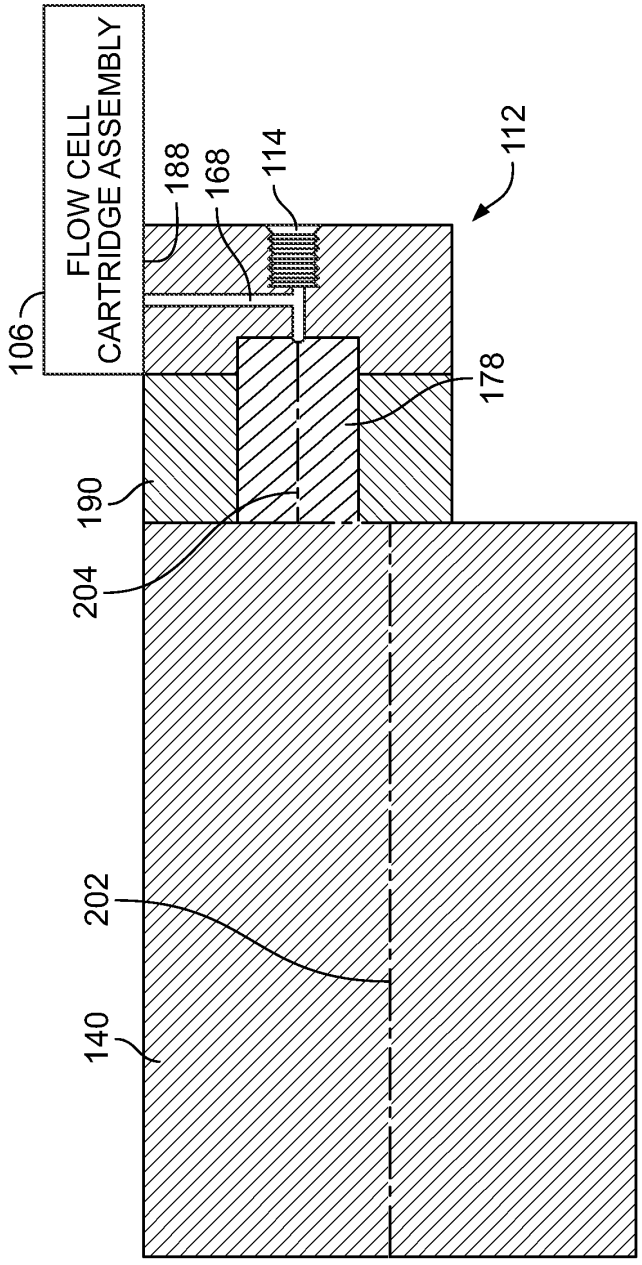
FLOW CELL CARTRIDGE ASSEMBLY
106
188
168
114
112
178
190
204
202
140

FIG. 4B

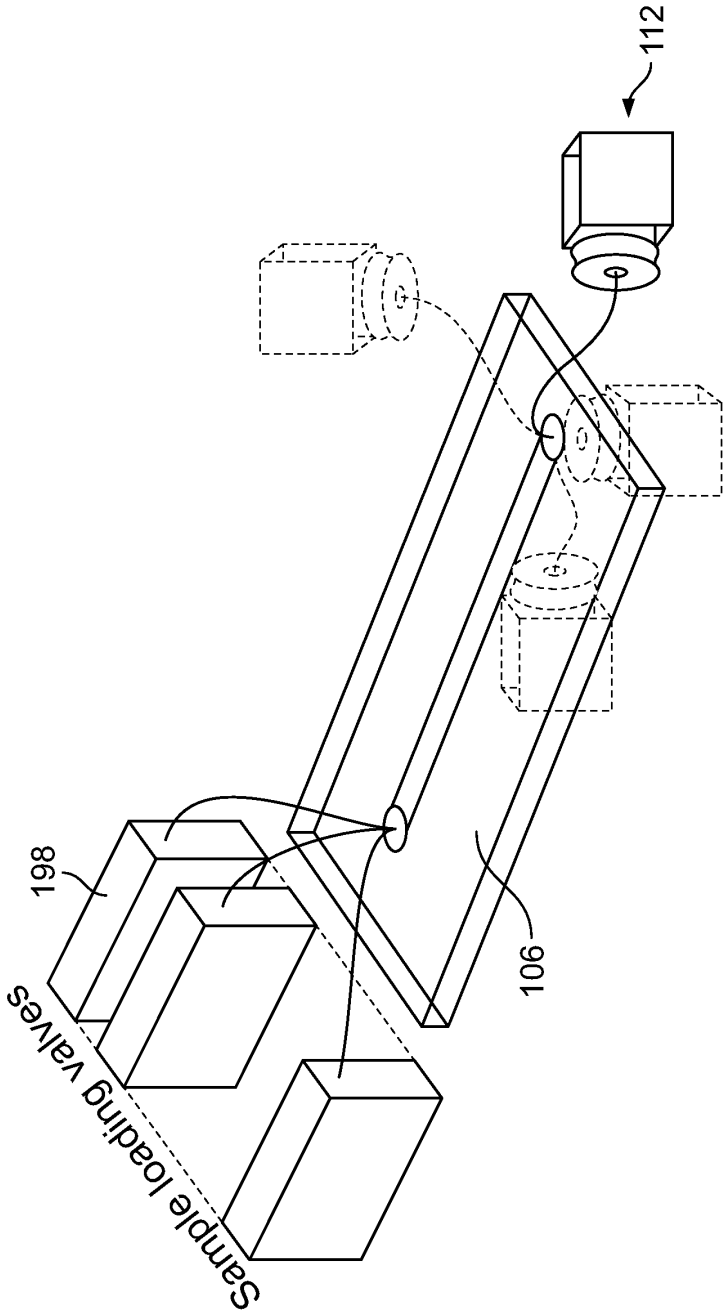

FIG. 5

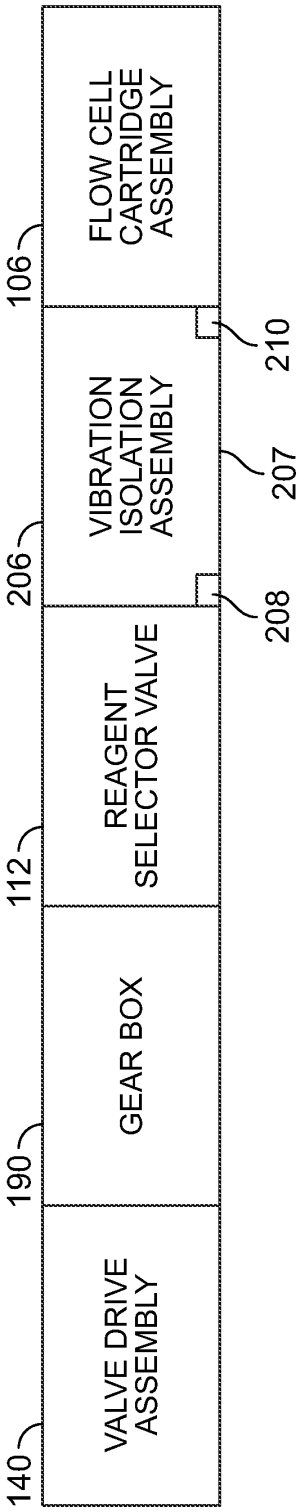
FLOW CELL CARTRIDGE ASSEMBLY
106
VIBRATION ISOLATION ASSEMBLY
206
210
207
208
REAGENT SELECTOR VALVE
112
GEAR BOX
190
VALVE DRIVE ASSEMBLY
140

FIG. 6

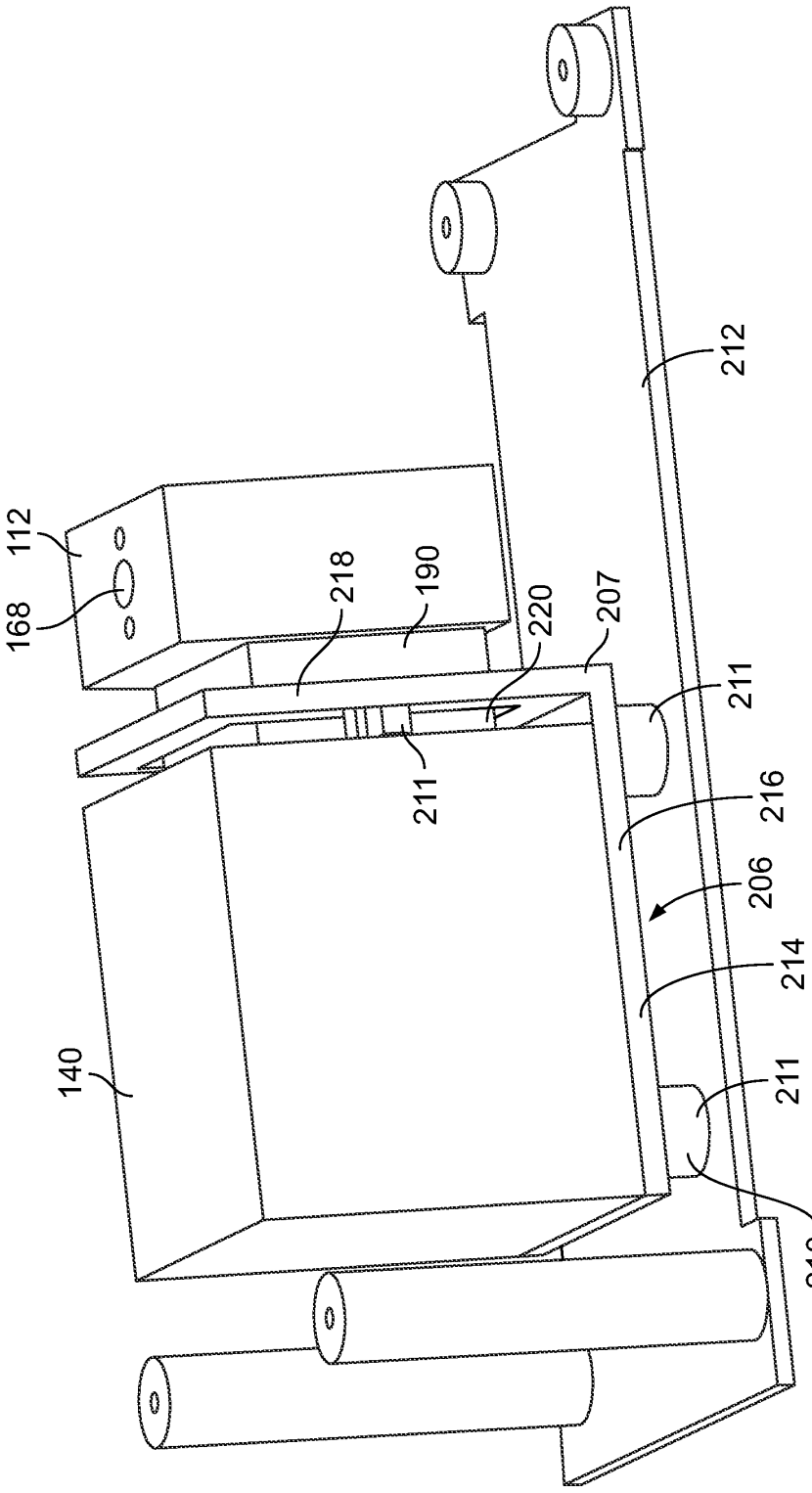

FIG. 7