(12) INTERNATIONAL APPLICATION PUBLISHED UNDER THE PATENT COOPERATION TREATY (PCT)

(19) World Intellectual Property Organization
International Bureau

(43) International Publication Date
20 October 2011 (20.10.2011)

PCT

(10) International Publication Number
WO 2011/128138 A1

(51) International Patent Classification:
G10L 19/00 (2006.01) *G10L 19/06* (2006.01)

(21) International Application Number:
PCT/EP2011/052354

(22) International Filing Date:
17 February 2011 (17.02.2011)

(25) Filing Language: English

(26) Publication Language: English

(30) Priority Data:
61/323,683 13 April 2010 (13.04.2010) US

(71) Applicant *(for all designated States except US)*: **FRAUNHOFER-GESELLSCHAFT ZUR FÖRDERUNG DER ANGEWANDTEN FORSCHUNG E.V.** [DE/DE]; Hansastraße 27c, 80686 München (DE).

(72) Inventors; and

(75) Inventors/Applicants *(for US only)*: **ROBILLIARD, Julien** [FR/DE]; Innerer Kleinreuther Weg 25 A, 90408 Nuernberg (DE). **NEUSINGER, Matthias** [DE/DE]; Bergstrasse 10, 91189 Rohr (DE). **HELMRICH, Christian** [DE/DE]; Hauptstrasse 68, 91054 Erlangen (DE). **HILPERT, Johannes** [DE/DE]; Herrnhuettestrasse 46, 90411 Nuernberg (DE). **RETTELBACH, Nikolaus** [DE/DE]; Spessartstrasse 38, 90427 Nuernberg (DE). **DISCH, Sascha** [DE/DE]; Wilhelmstrasse 70, 90766 Fuerth (DE). **EDLER, Bernd** [DE/DE]; Hemelingstrasse 10, 30419 Hannover (DE).

(74) Agents: **ZINKLER, Franz** et al.; 246, 82043 Pullach (DE).

(81) Designated States *(unless otherwise indicated, for every kind of national protection available)*: AE, AG, AL, AM, AO, AT, AU, AZ, BA, BB, BG, BH, BR, BW, BY, BZ, CA, CH, CL, CN, CO, CR, CU, CZ, DE, DK, DM, DO, DZ, EC, EE, EG, ES, FI, GB, GD, GE, GH, GM, GT, HN, HR, HU, ID, IL, IN, IS, JP, KE, KG, KM, KN, KP, KR, KZ, LA, LC, LK, LR, LS, LT, LU, LY, MA, MD, ME, MG, MK, MN, MW, MX, MY, MZ, NA, NG, NI, NO, NZ, OM, PE, PG, PH, PL, PT, RO, RS, RU, SC, SD, SE, SG, SK, SL, SM, ST, SV, SY, TH, TJ, TM, TN, TR, TT, TZ, UA, UG, US, UZ, VC, VN, ZA, ZM, ZW.

(84) Designated States *(unless otherwise indicated, for every kind of regional protection available)*: ARIPO (BW, GH, GM, KE, LR, LS, MW, MZ, NA, SD, SL, SZ, TZ, UG, ZM, ZW), Eurasian (AM, AZ, BY, KG, KZ, MD, RU, TJ, TM), European (AL, AT, BE, BG, CH, CY, CZ, DE, DK, EE, ES, FI, FR, GB, GR, HR, HU, IE, IS, IT, LT, LU, LV, MC, MK, MT, NL, NO, PL, PT, RO, RS, SE, SI, SK,

[Continued on next page]

(54) Title: AUDIO OR VIDEO ENCODER, AUDIO OR VIDEO DECODER AND RELATED METHODS FOR PROCESSING MULTI-CHANNEL AUDIO OR VIDEO SIGNALS USING A VARIABLE PREDICTION DIRECTION

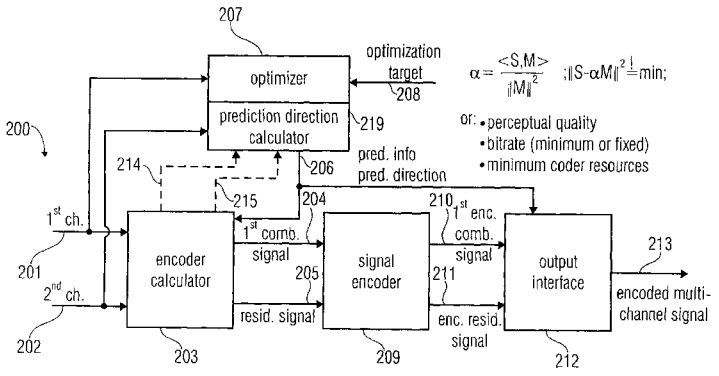

FIG 2
(AUDIO ENCODER)

(57) Abstract: An audio or video encoder and an audio or video decoder are based on a combination of two audio or video channels (201, 202) to obtain a first combination signal (204) as a mid signal and a residual signal (205) which can be derived using a predicted side signal derived from the mid signal. The first combination signal and the prediction residual signal are encoded (209) and written (212) into a data stream (213) together with the prediction information (206) derived by an optimizer (207) based on an optimization target (208) and a prediction direction indicator indicating a prediction direction associated with the residual signal. A decoder uses the prediction residual signal, the first combination signal, the prediction direction indicator and the prediction information to derive a decoded first channel signal and a decoded second channel signal. In an encoder example or in a decoder example, a real-to-imaginary transform can be applied for estimating the imaginary part of the spectrum of the first combination signal. For calculating the prediction signal used in the derivation of the prediction residual signal, the real-valued first combination signal is multiplied by a real portion of the complex prediction information and the estimated imaginary part of the first combination signal is multiplied by an imaginary portion of the complex prediction information.

WO 2011/128138 A1

SM, TR), OAPI (BF, BJ, CF, CG, CI, CM, GA, GN, GQ, GW, ML, MR, NE, SN, TD, TG).

Published:

— *with international search report (Art. 21(3))*