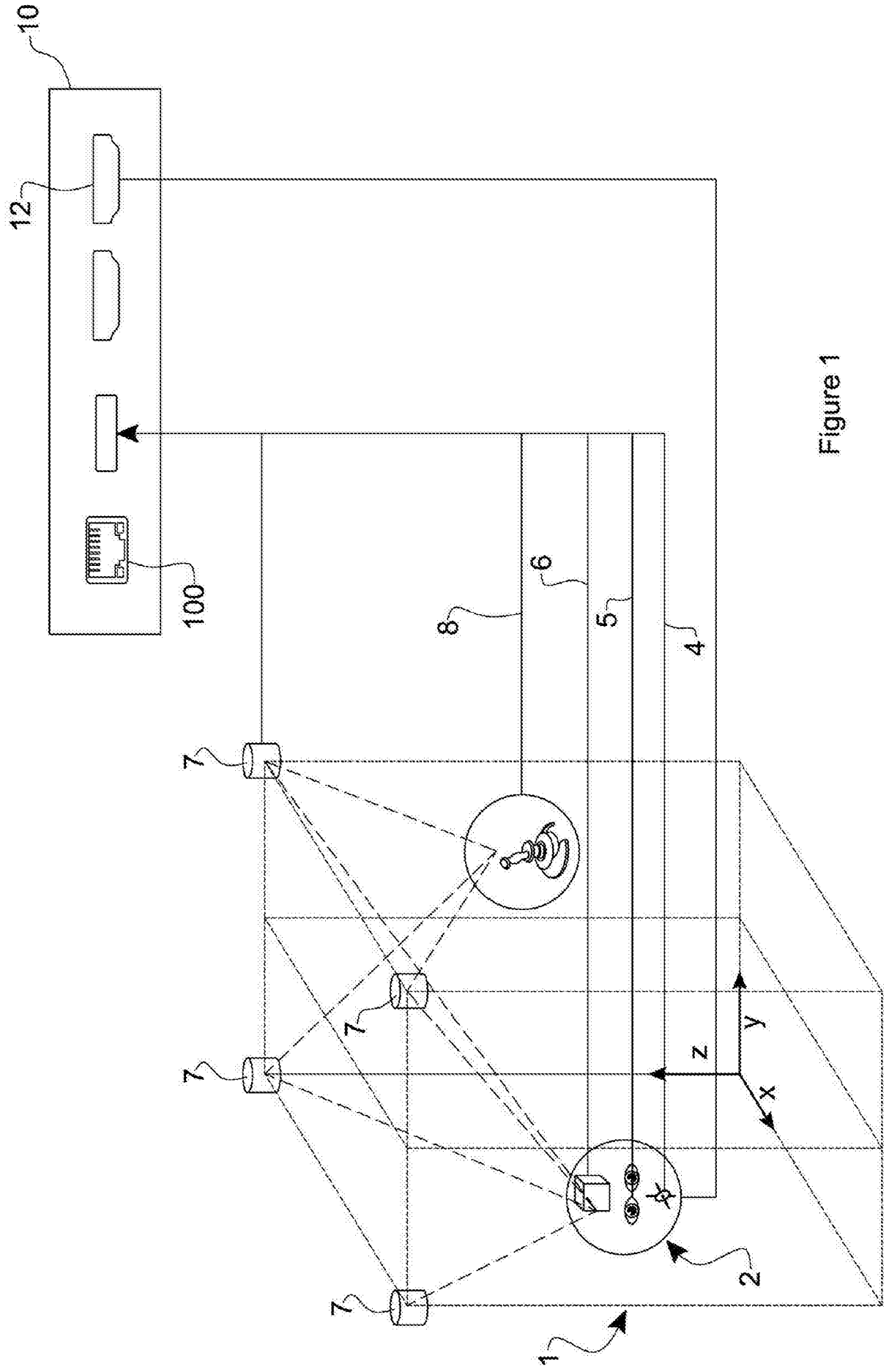

Figure 1

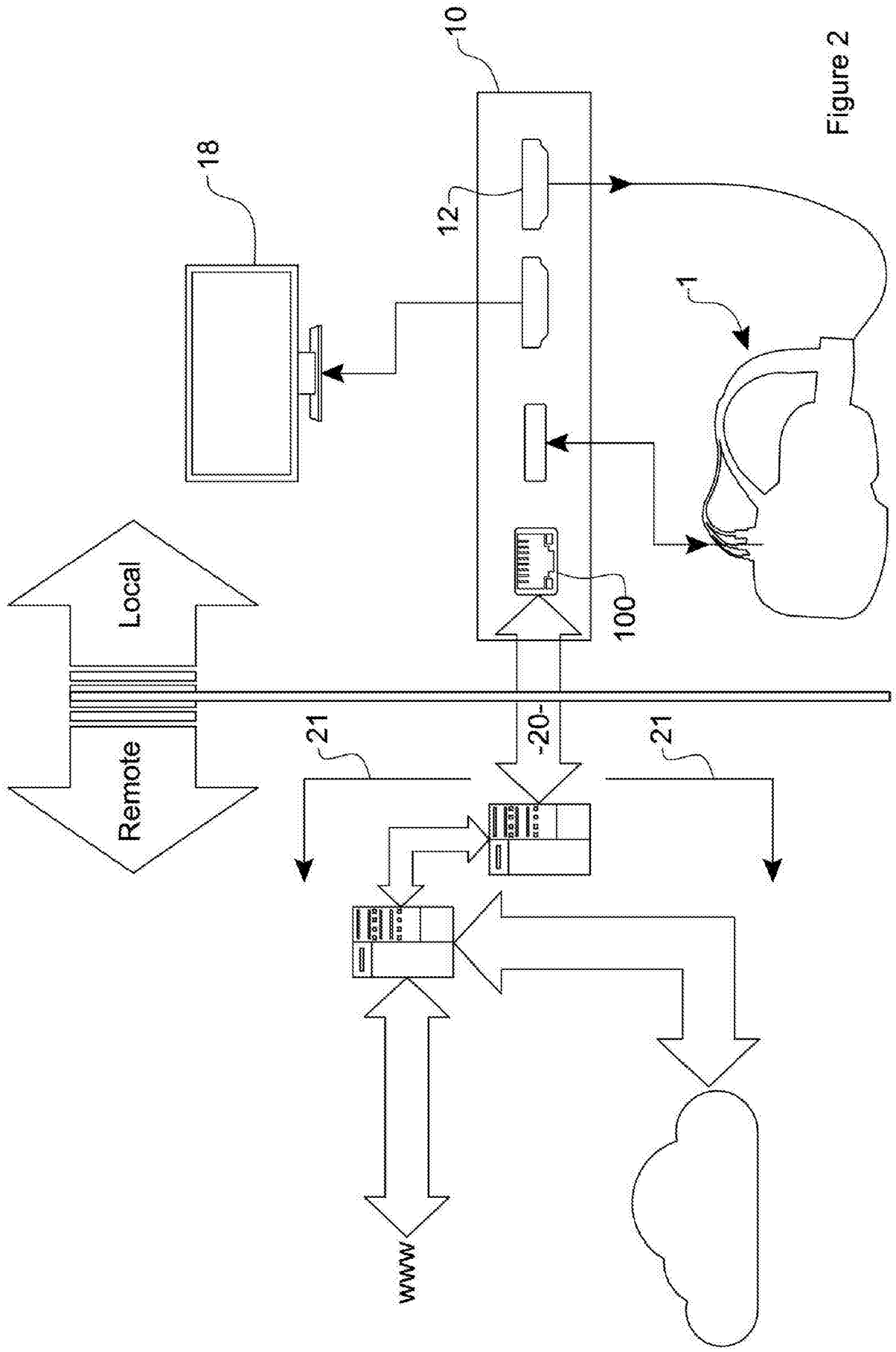

Figure 2

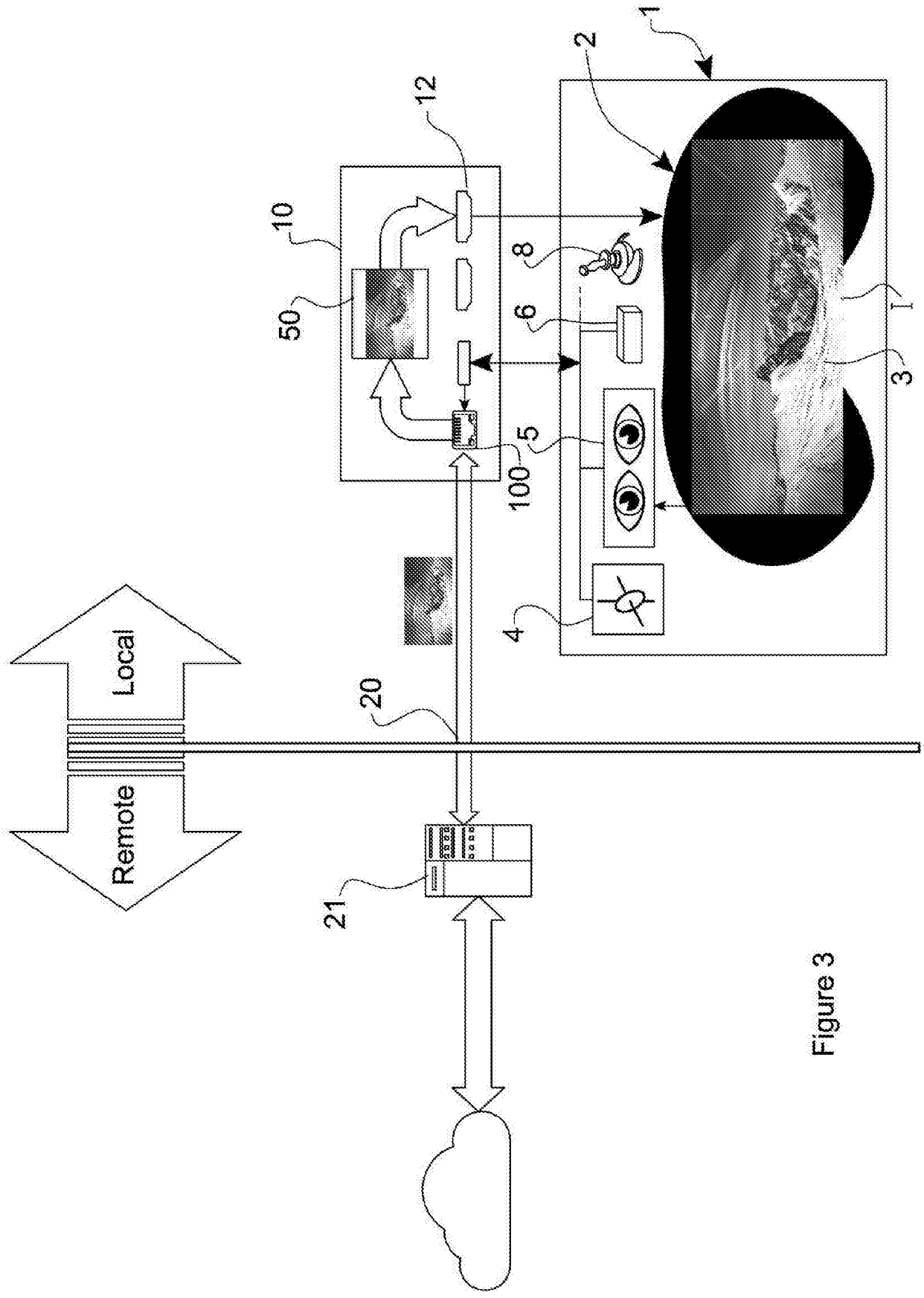

Figure 3

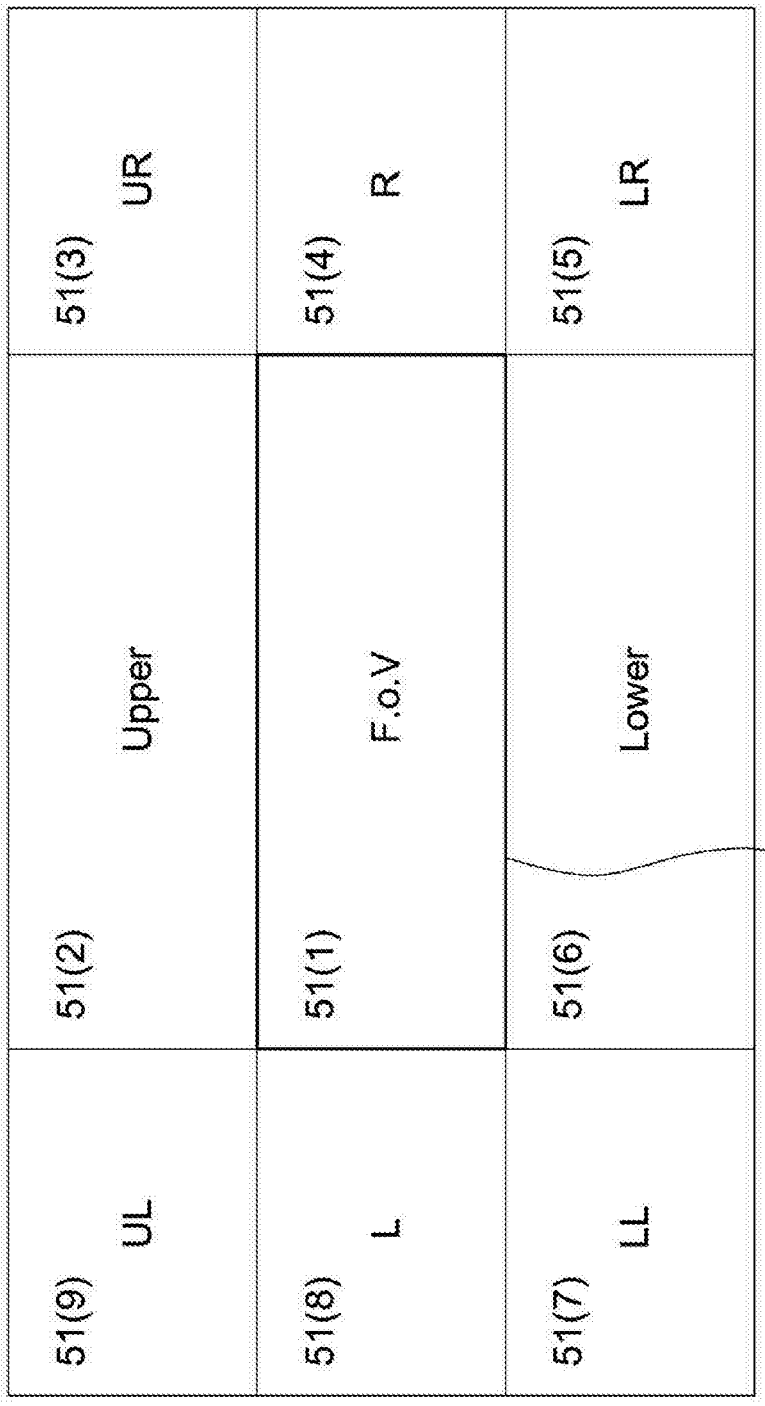
51(3)
UR
51(4)
R
51(5)
LR
51(2)
Upper
51(1)
F.o.V
51(6)
Lower
50
51(9)
UL
51(8)
L
51(7)
LL

Figure 4

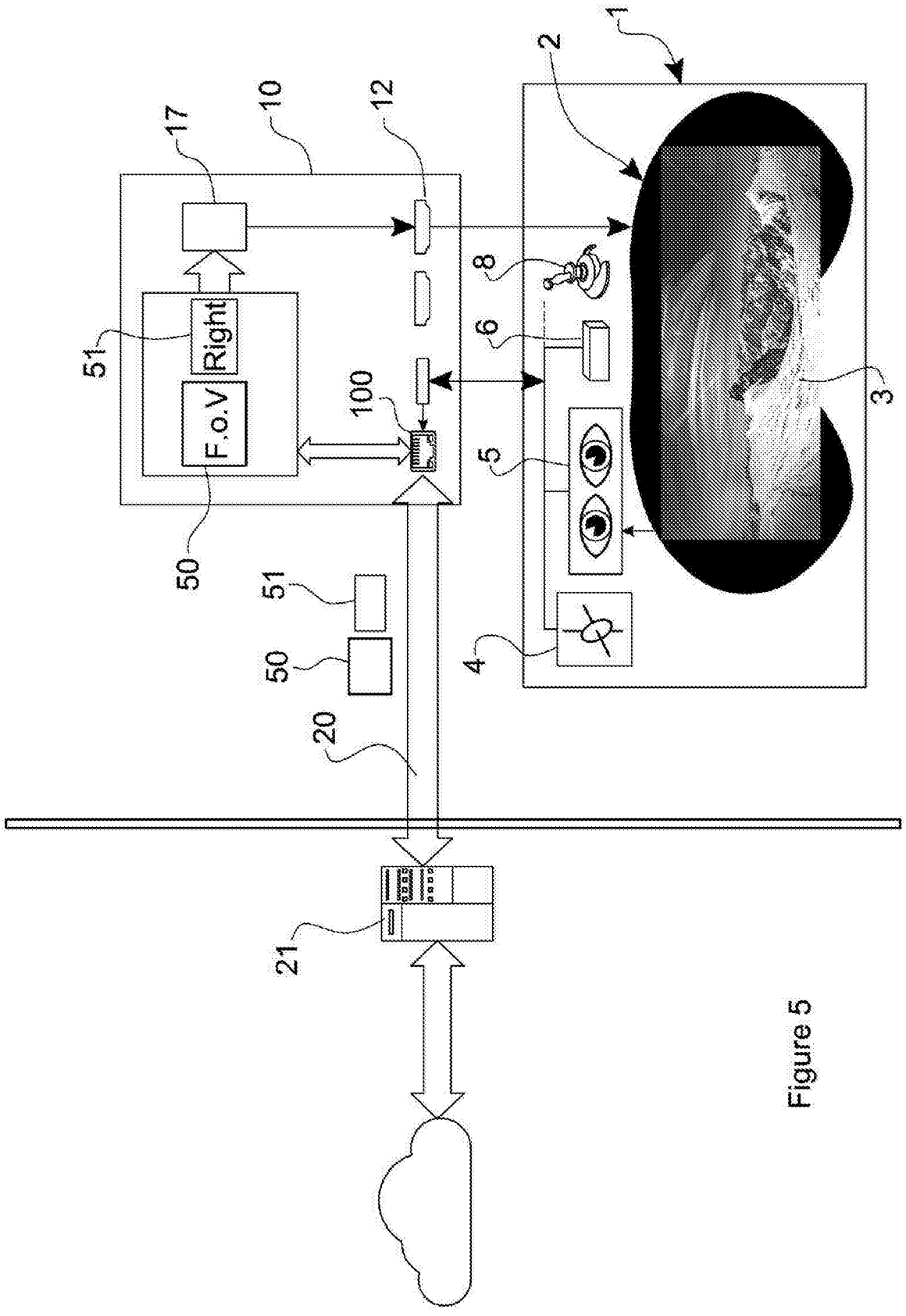

Figure 5

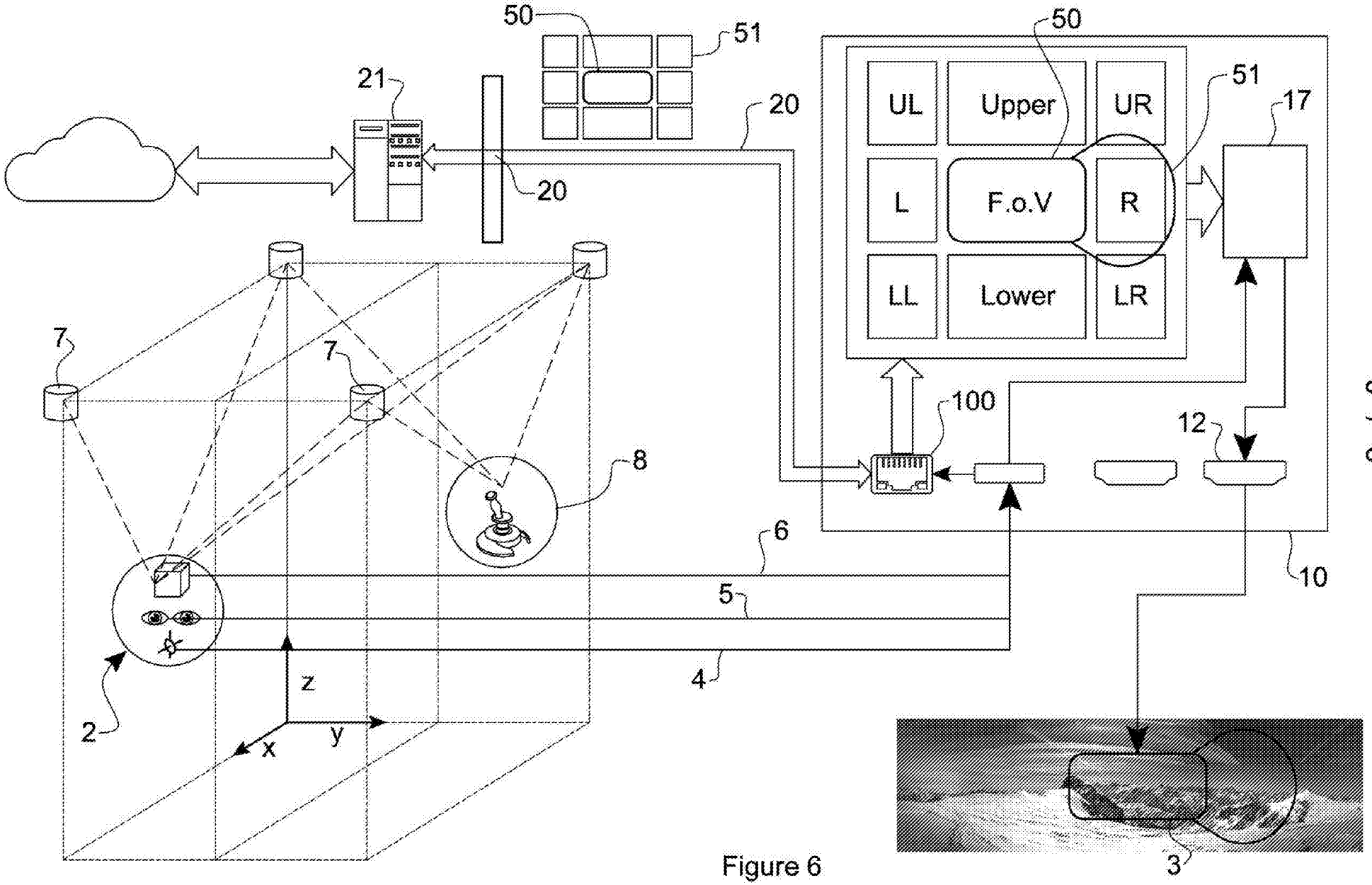
50
51
21
20
20
50
UL
Upper
UR
51
17
L
F.o.V
R
LL
Lower
LR
100
12
7
7
8
6
5
4
10
z
y
x
2
3

Figure 6

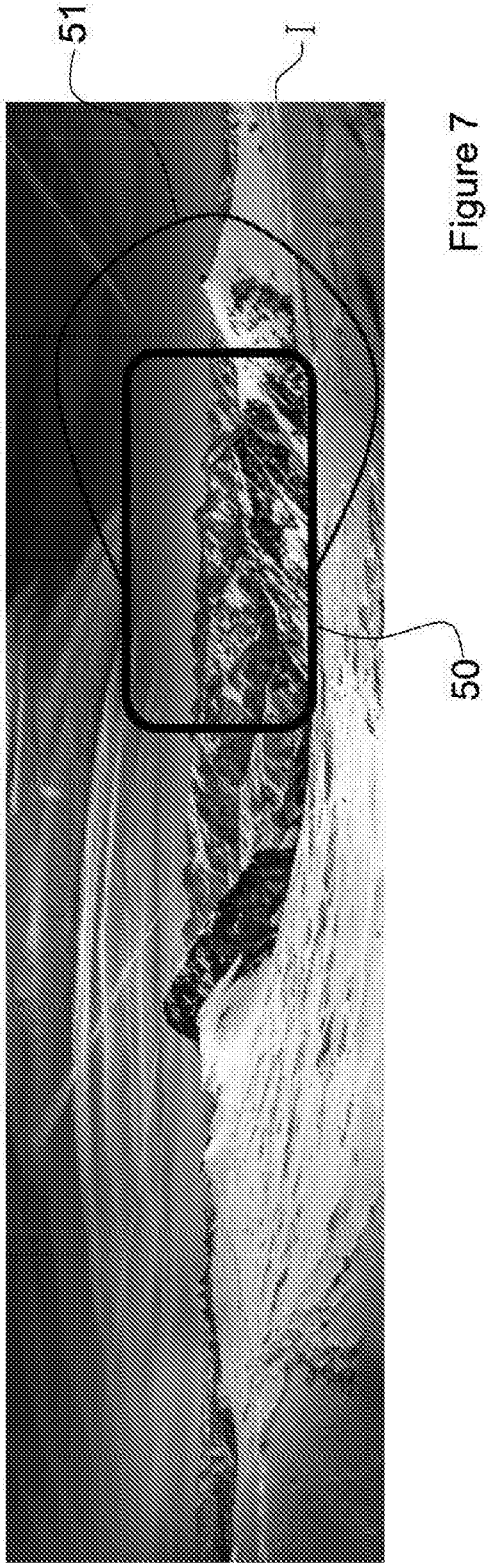

Figure 7

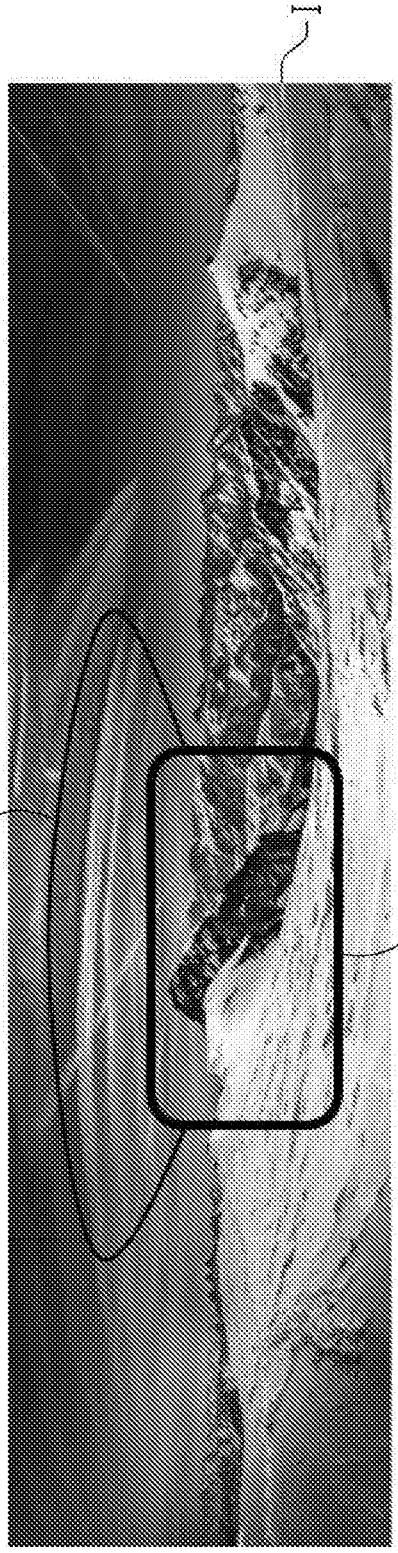

Figure 8

Figure 9

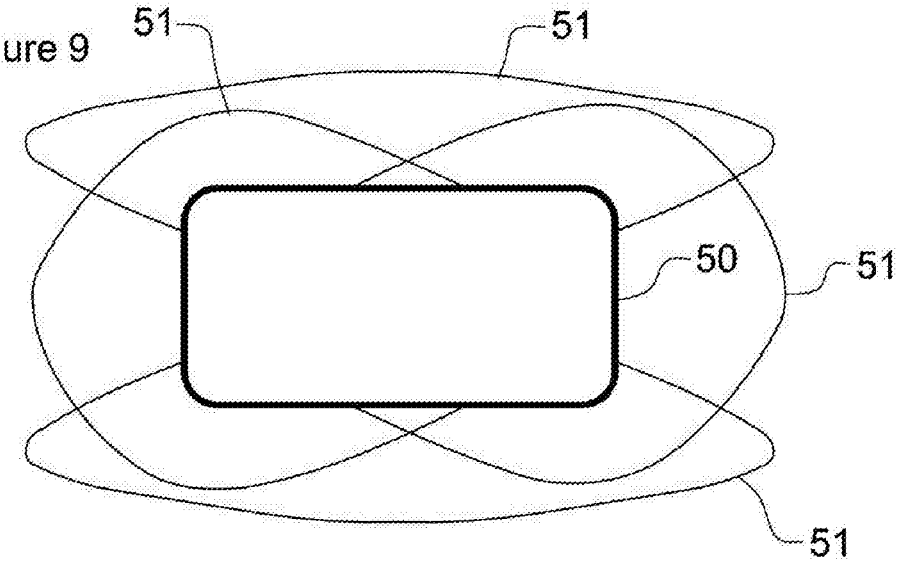

Figure 10

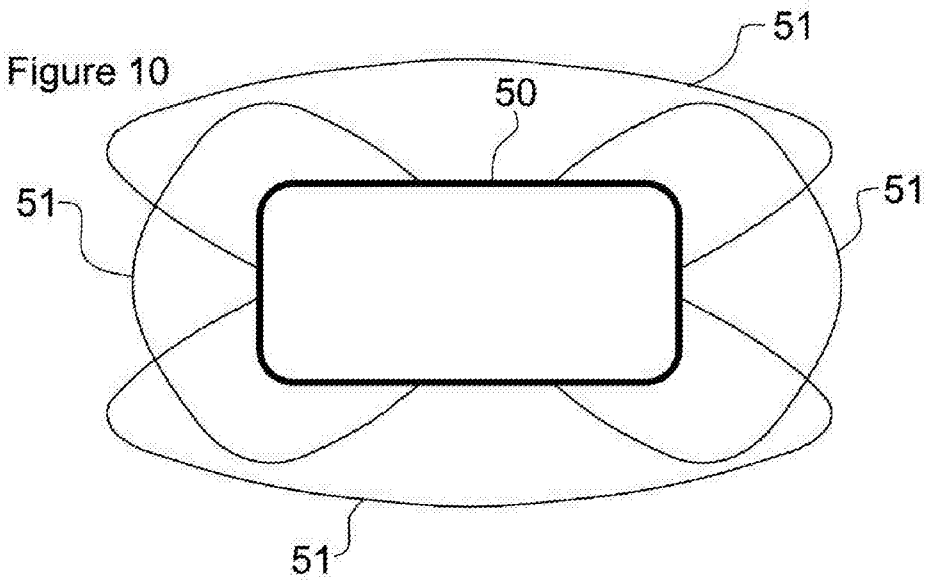

Figure 11

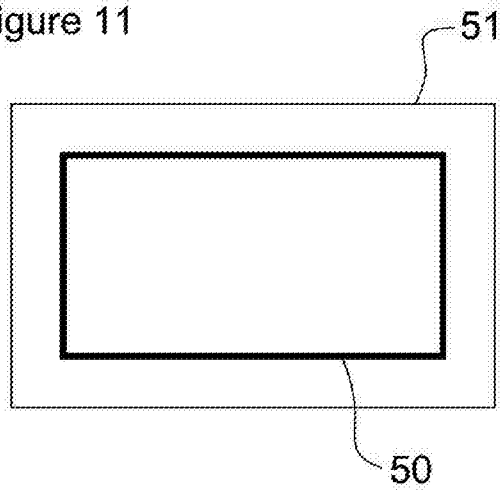

Figure 12

