(12) INTERNATIONAL APPLICATION PUBLISHED UNDER THE PATENT COOPERATION TREATY (PCT)

(19) World Intellectual Property Organization
International Bureau

(43) International Publication Date
27 November 2003 (27.11.2003)

PCT

(10) International Publication Number
WO 03/096831 A1

(51) International Patent Classification[7]: A41F 15/00

(21) International Application Number: PCT/EP03/05443

(22) International Filing Date: 21 May 2003 (21.05.2003)

(25) Filing Language: English

(26) Publication Language: English

(30) Priority Data:
S2002/0406 21 May 2002 (21.05.2002) IE

(71) Applicants and
(72) Inventors: **WARD, Bernie** [IE/IE]; 12 Cambridge Avenue, Ringsend, Dublin 4 (IE). **HICKEY, Marese** [IE/IE]; 22 Pembroke Cottages, Donnybrook, Dublin 4 (IE).

(74) Agents: **O'CONNELL, Maura** et al.; F.R. Kelly & Co., 27 Clyde Road, Ballsbridge, Dublin 4 (IE).

(81) Designated States *(national)*: AE, AG, AL, AM, AT (utility model), AT, AU, AZ, BA, BB, BG, BR, BY, BZ, CA, CH, CN, CO, CR, CU, CZ (utility model), CZ, DE (utility model), DE, DK (utility model), DK, DM, DZ, EC, EE (utility model), EE, ES, FI (utility model), FI, GB, GD, GE, GH, GM, HR, HU, ID, IL, IN, IS, JP, KE, KG, KP, KR, KZ, LC, LK, LR, LS, LT, LU, LV, MA, MD, MG, MK, MN, MW, MX, MZ, NI, NO, NZ, OM, PH, PL, PT, RO, RU, SC, SD, SE, SG, SK (utility model), SK, SL, TJ, TM, TN, TR, TT, TZ, UA, UG, US, UZ, VC, VN, YU, ZA, ZM, ZW.

(84) Designated States *(regional)*: ARIPO patent (GH, GM, KE, LS, MW, MZ, SD, SL, SZ, TZ, UG, ZM, ZW), Eurasian patent (AM, AZ, BY, KG, KZ, MD, RU, TJ, TM), European patent (AT, BE, BG, CH, CY, CZ, DE, DK, EE, ES, FI, FR, GB, GR, HU, IE, IT, LU, MC, NL, PT, RO, SE, SI, SK, TR), OAPI patent (BF, BJ, CF, CG, CI, CM, GA, GN, GQ, GW, ML, MR, NE, SN, TD, TG).

Published:
— *with international search report*

For two-letter codes and other abbreviations, refer to the "Guidance Notes on Codes and Abbreviations" appearing at the beginning of each regular issue of the PCT Gazette.

(54) Title: A STRAP COUPLING

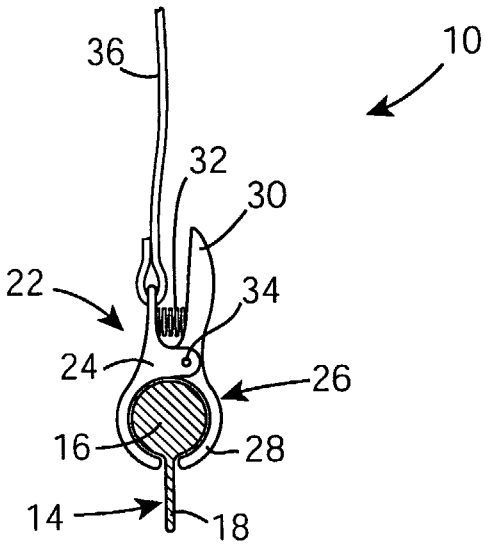

(57) Abstract: The present invention is concerned with a coupling (10) for use in securing a strap to a garment, for example on a bra (12) or bikini, the coupling comprising a slideway (14) adapted to be secured to the body of the garment, and a slider (22) connectable to the strap, (36) the slider being shaped and dimensioned for sliding engagement with the slideway (14), the slider (22) also preferably being operable to be releasably secured at any position along the slideway.

WO 03/096831 A1