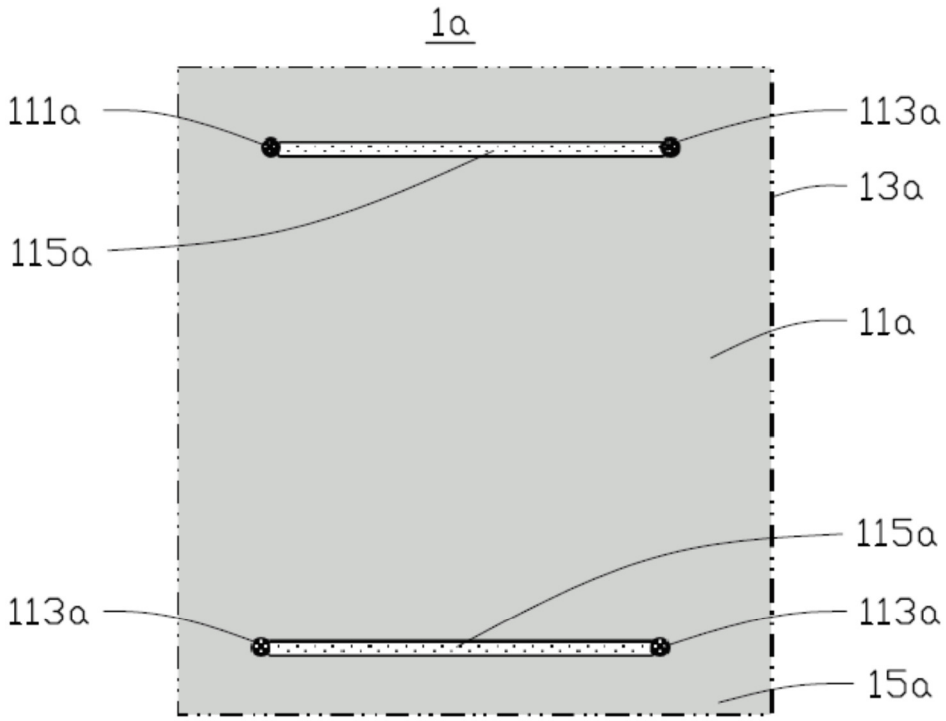
1a
111a
113a
13a
115a
11a
115a
113a
113a
15a

FIG. 1A

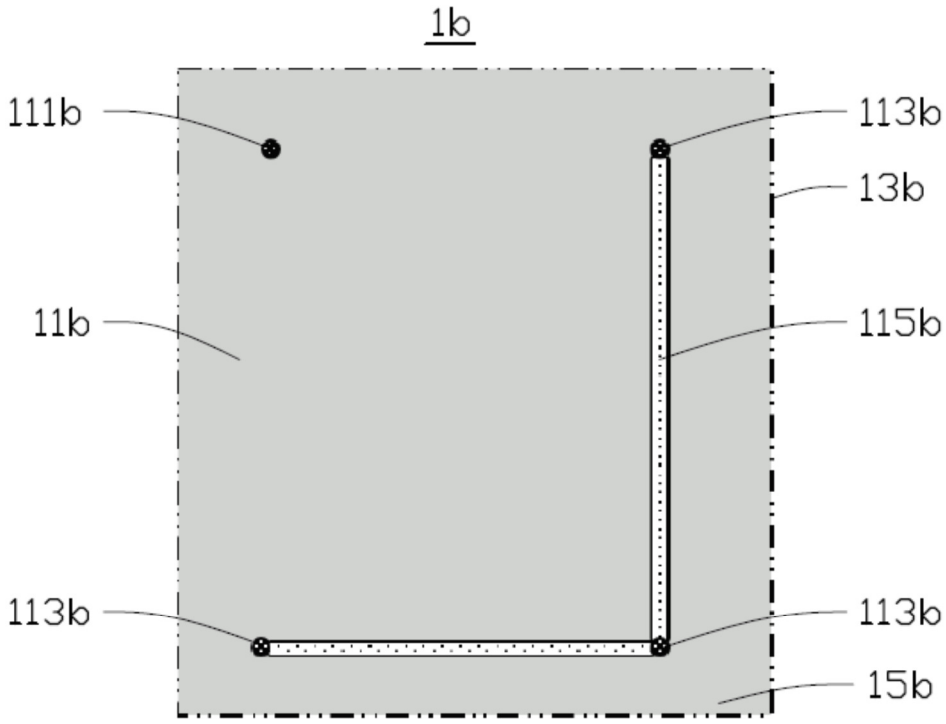
1b
111b
113b
13b
11b
115b
113b
113b
15b

FIG. 1B

2

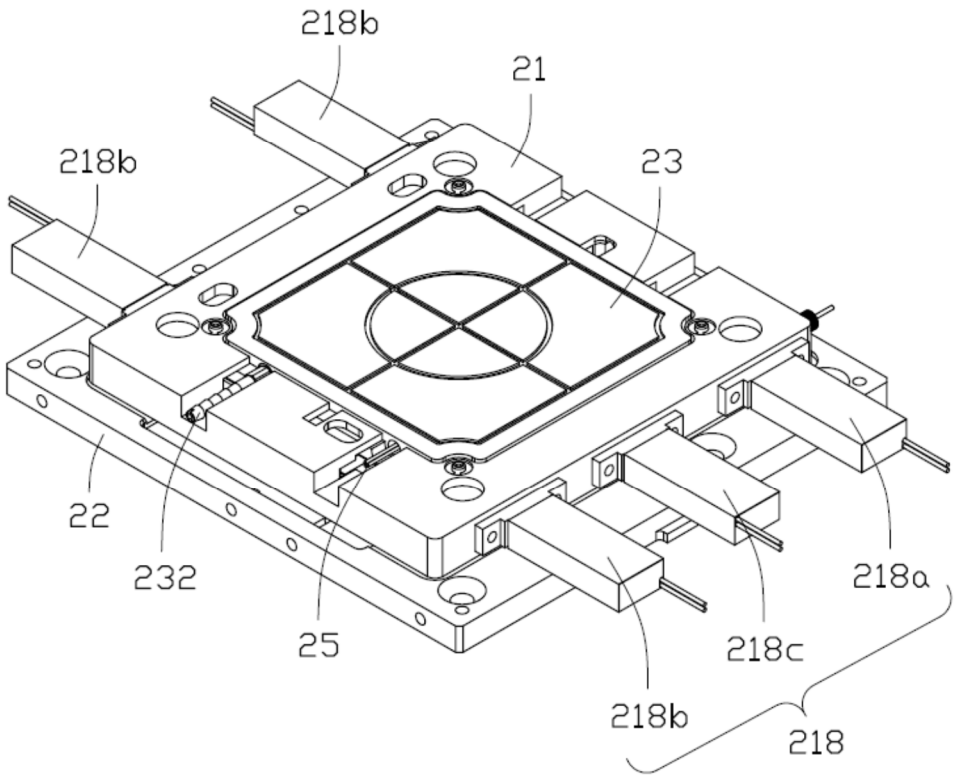

FIG. 2

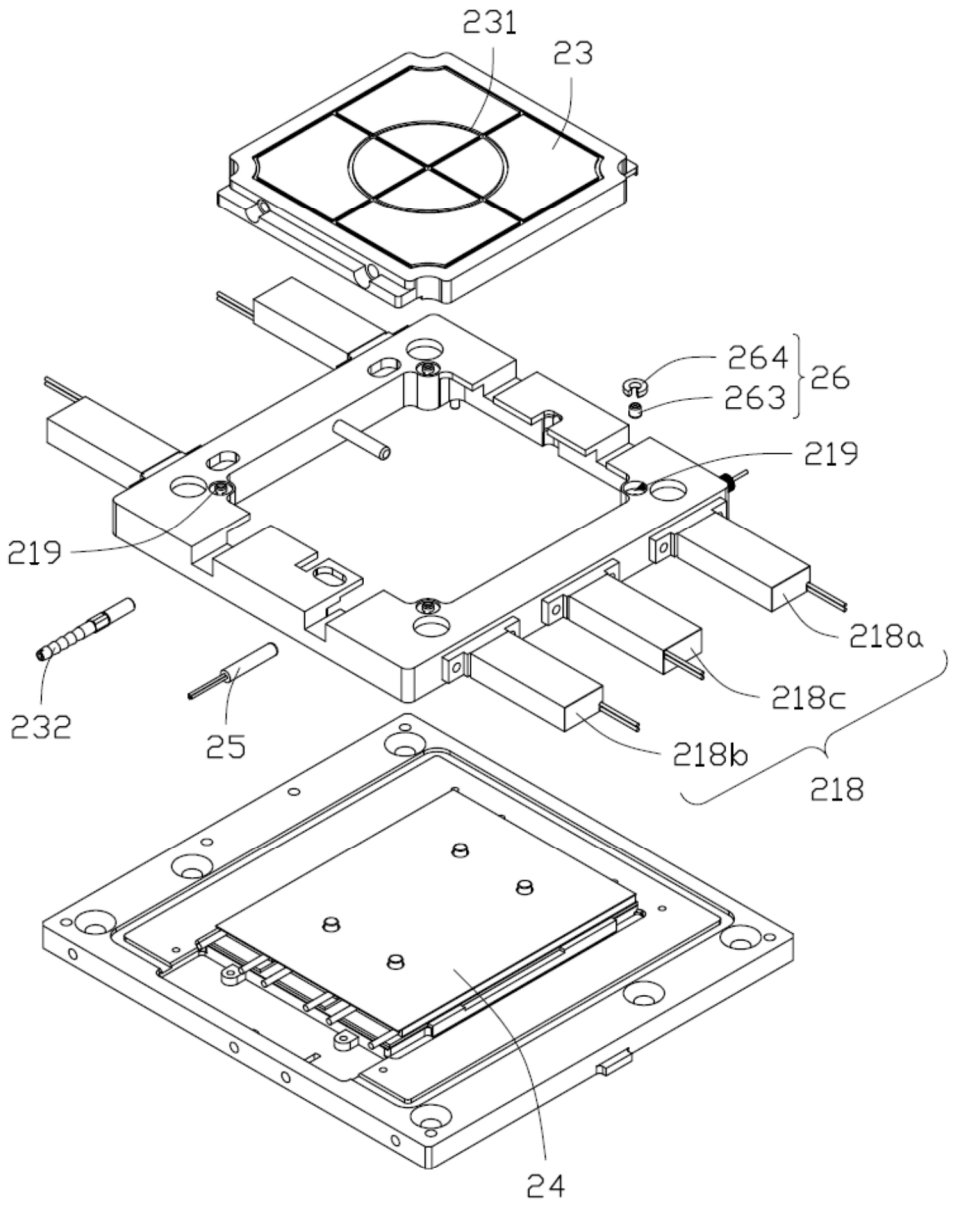

FIG. 3

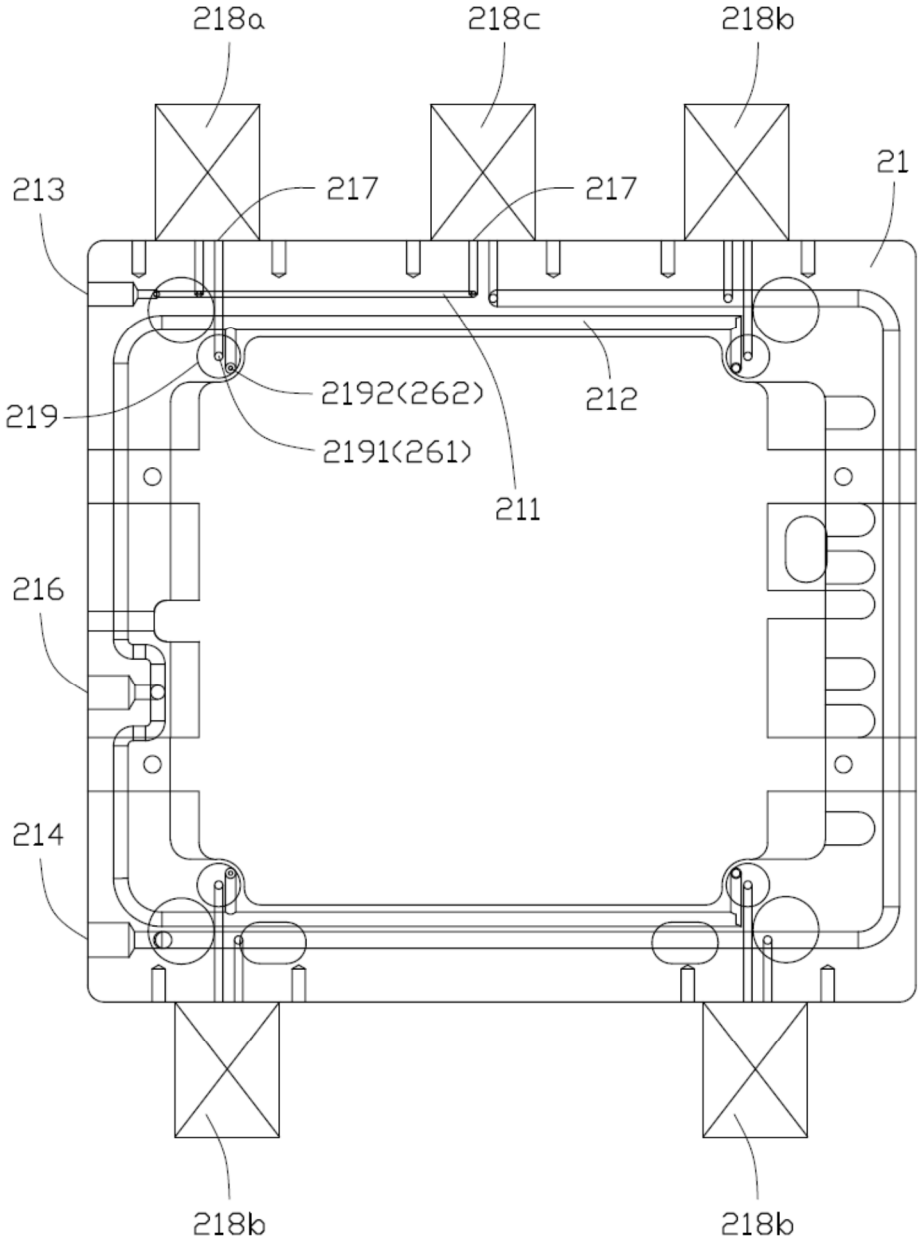
218a
218c
218b
21
213
217
217
219
2192(262)
212
2191(261)
211
216
214
218b
218b

FIG. 4

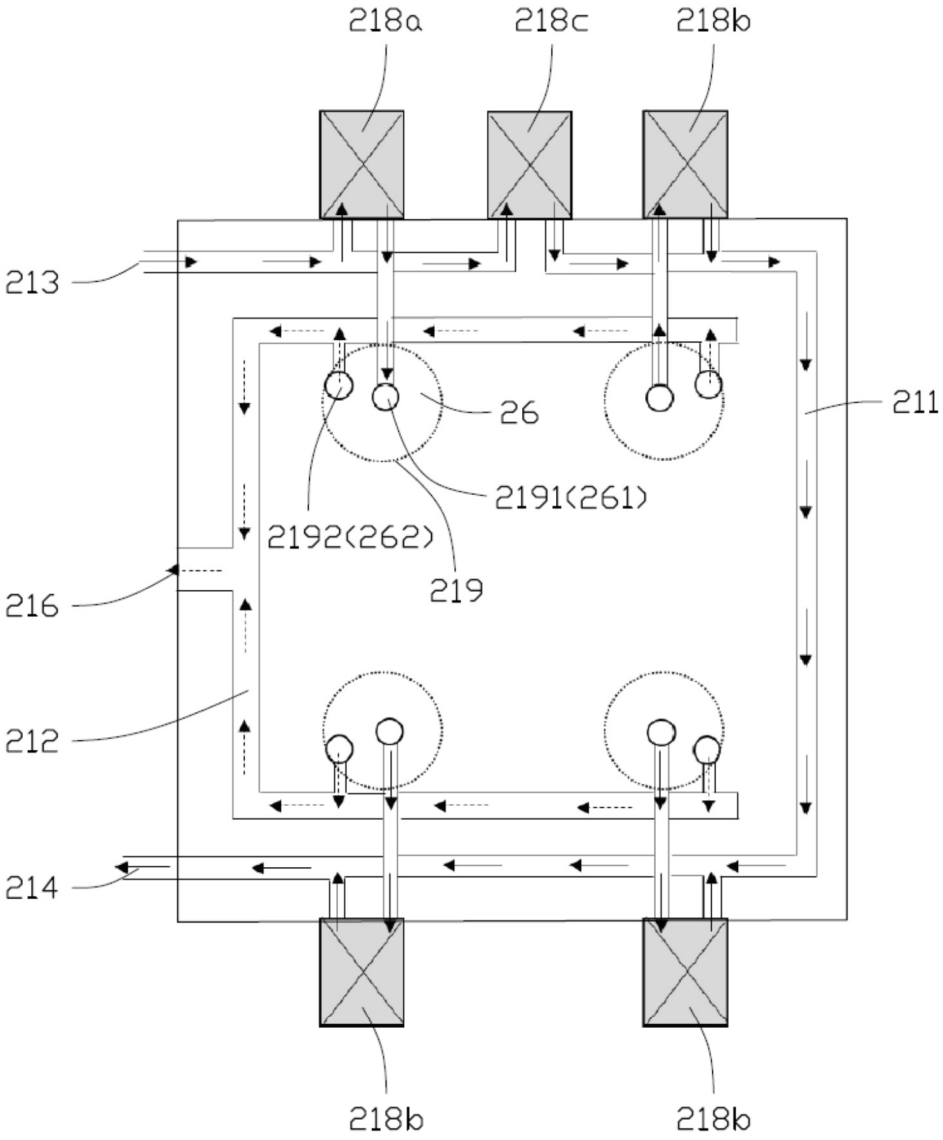
218a
218c
218b
213
26
211
2191(261)
2192(262)
219
216
212
214
218b
218b

FIG. 5

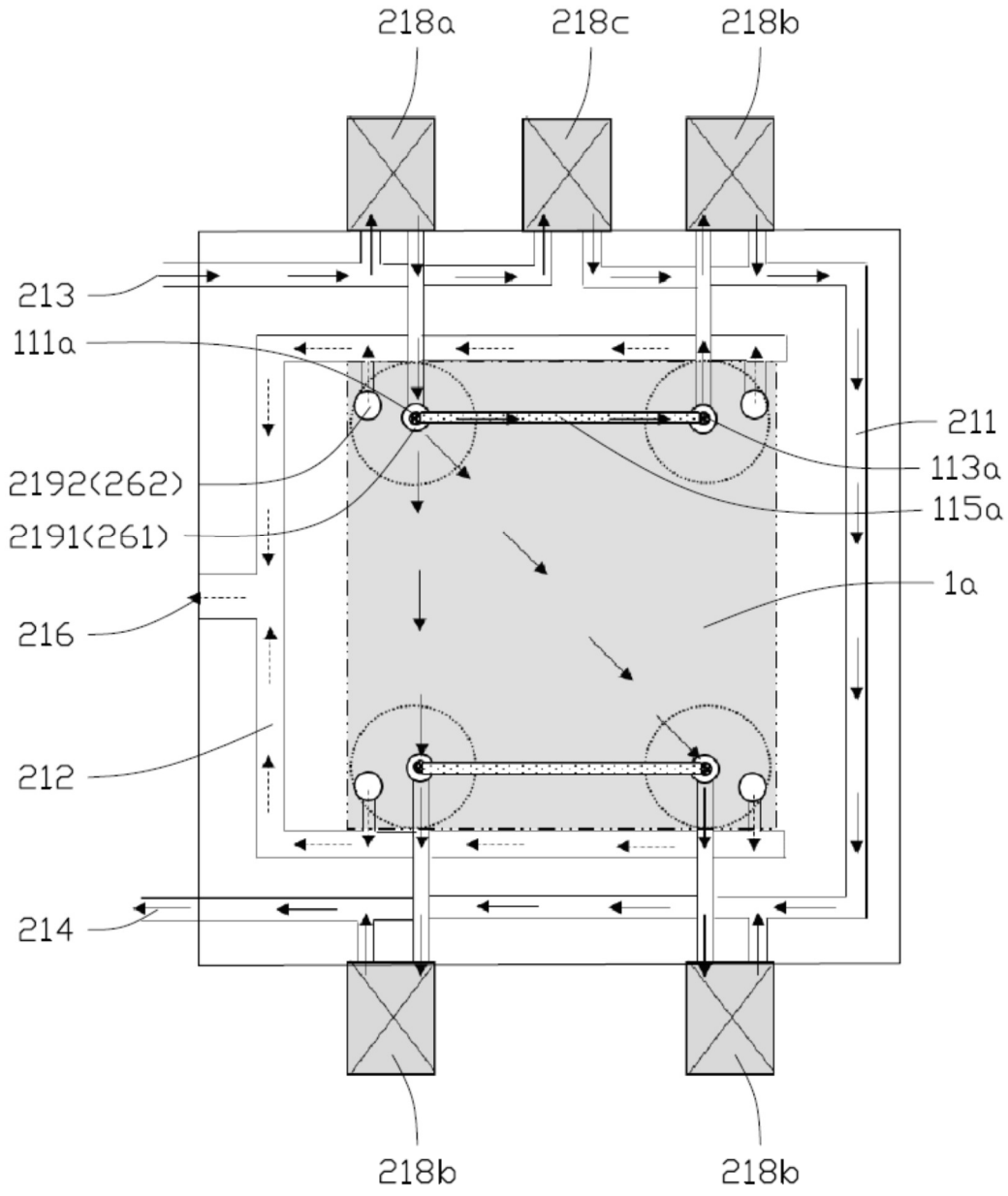
218a
218c
218b
213
111a
211
2192(262)
113a
115a
2191(261)
1a
216
212
214
218b
218b

FIG. 6

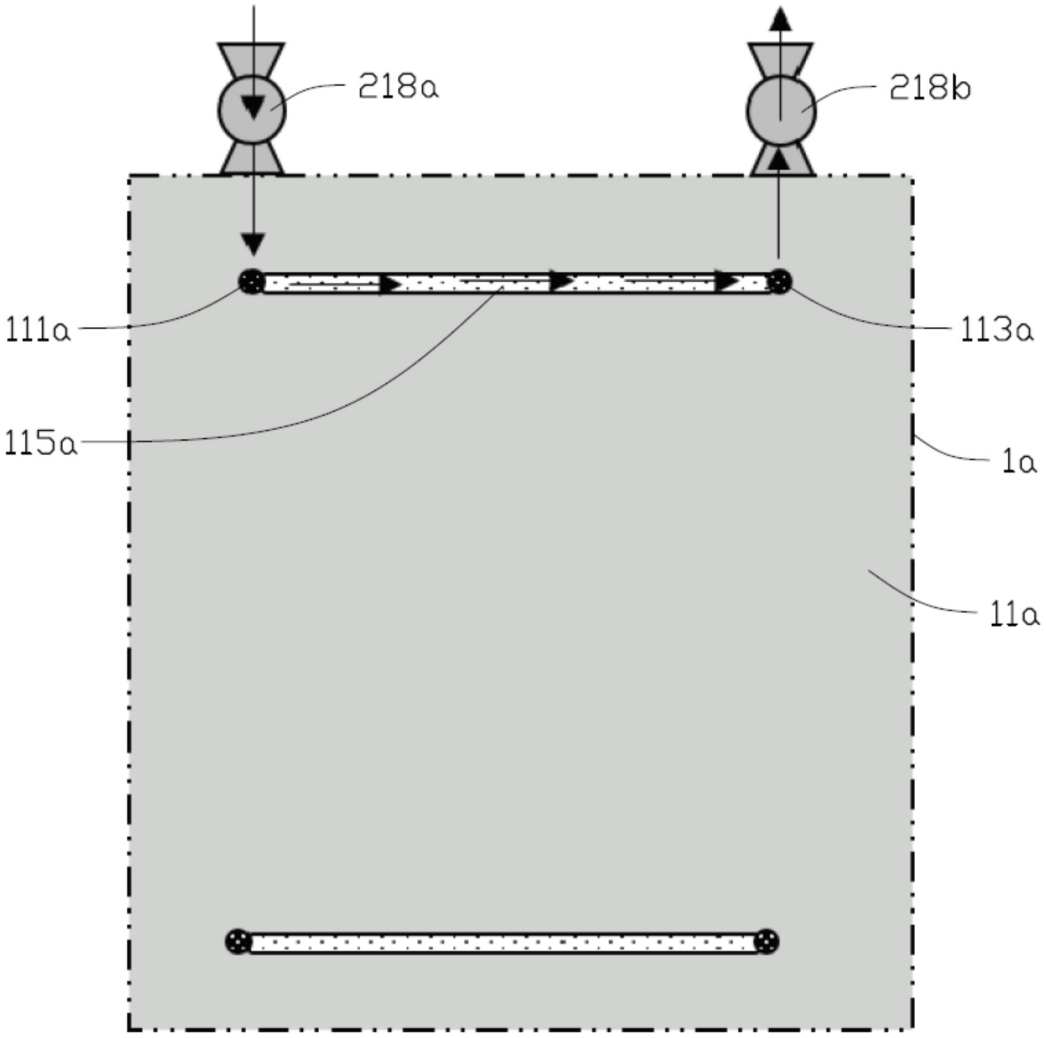

FIG. 7A

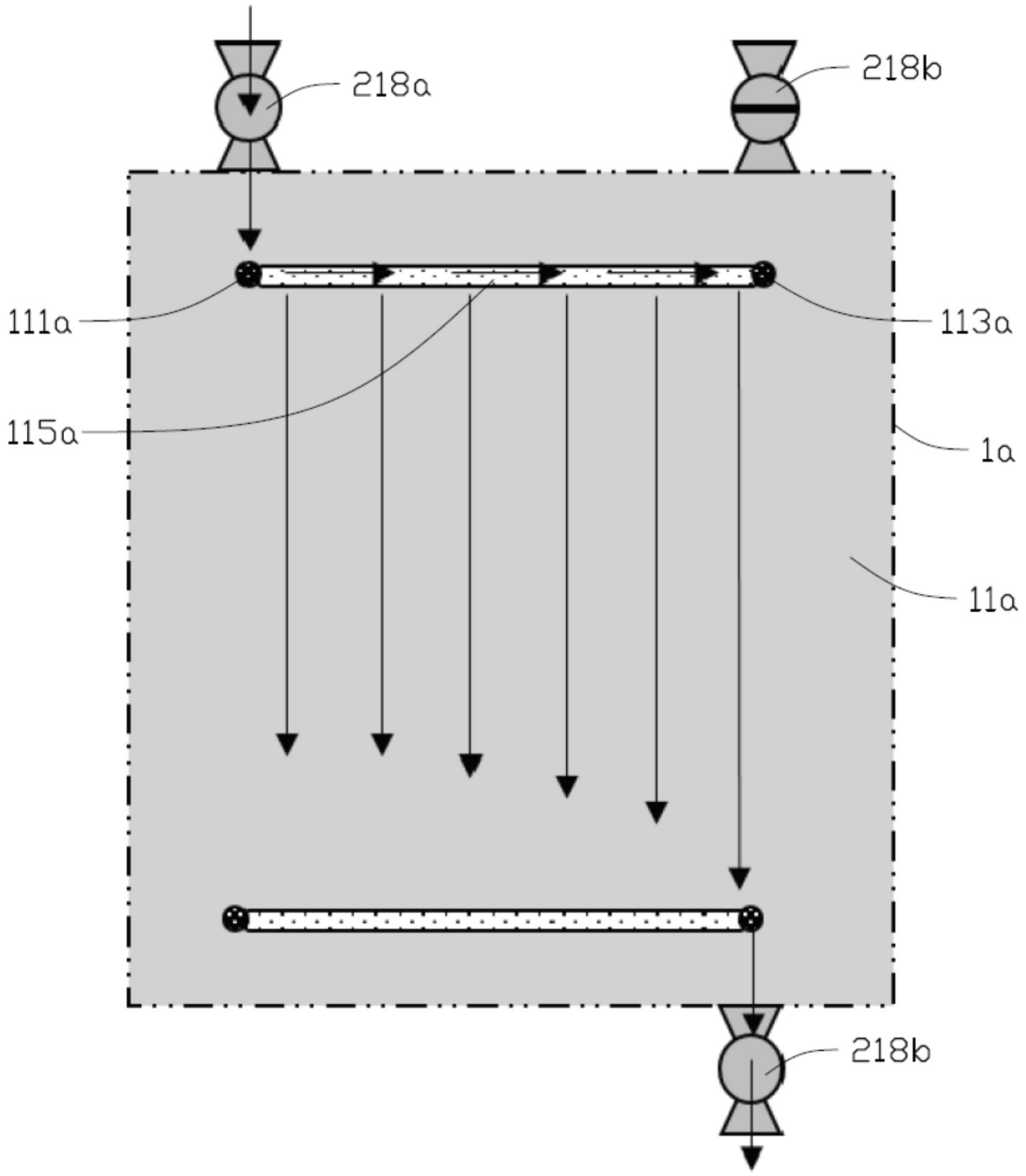

FIG. 7B

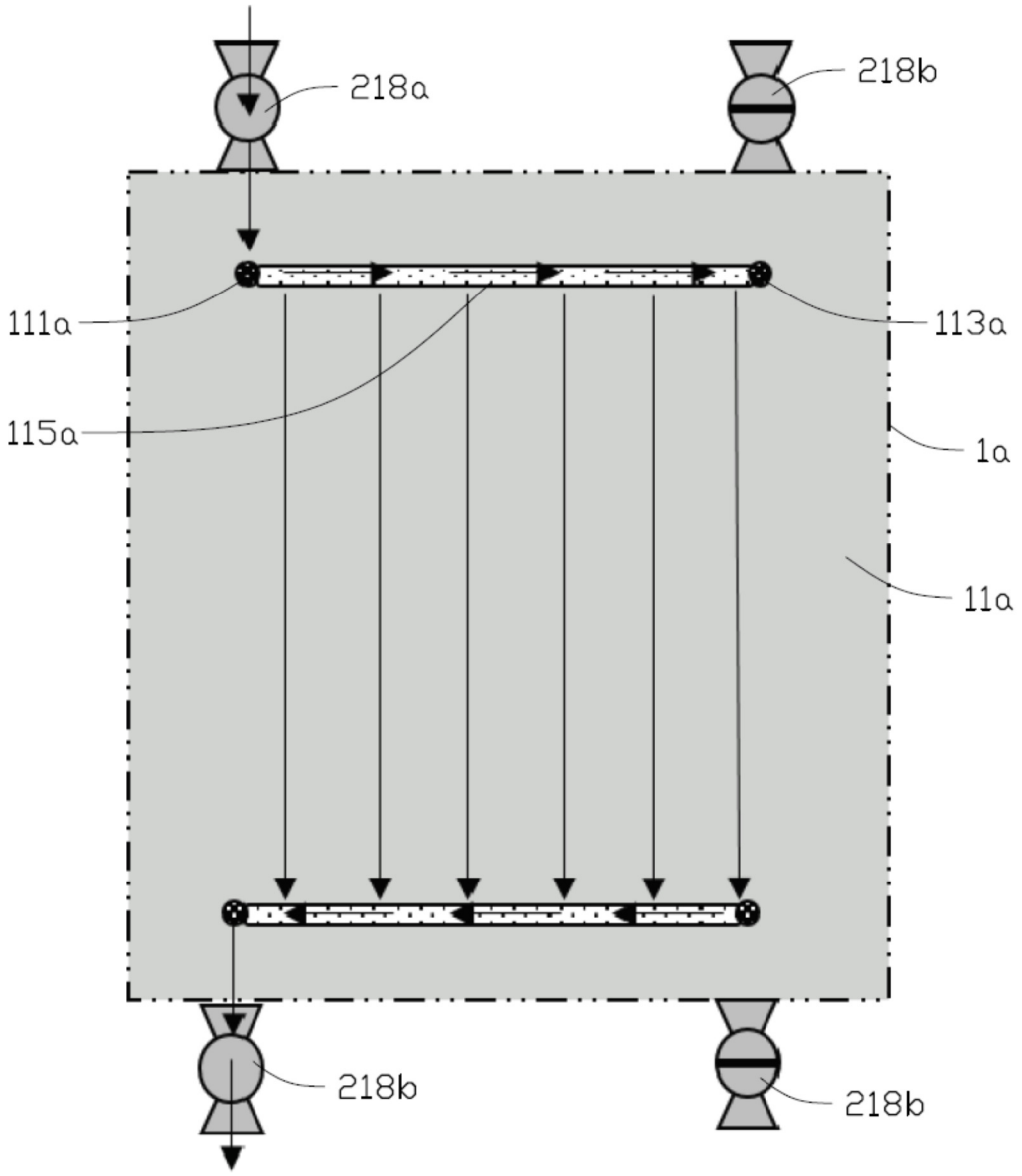

FIG. 7C

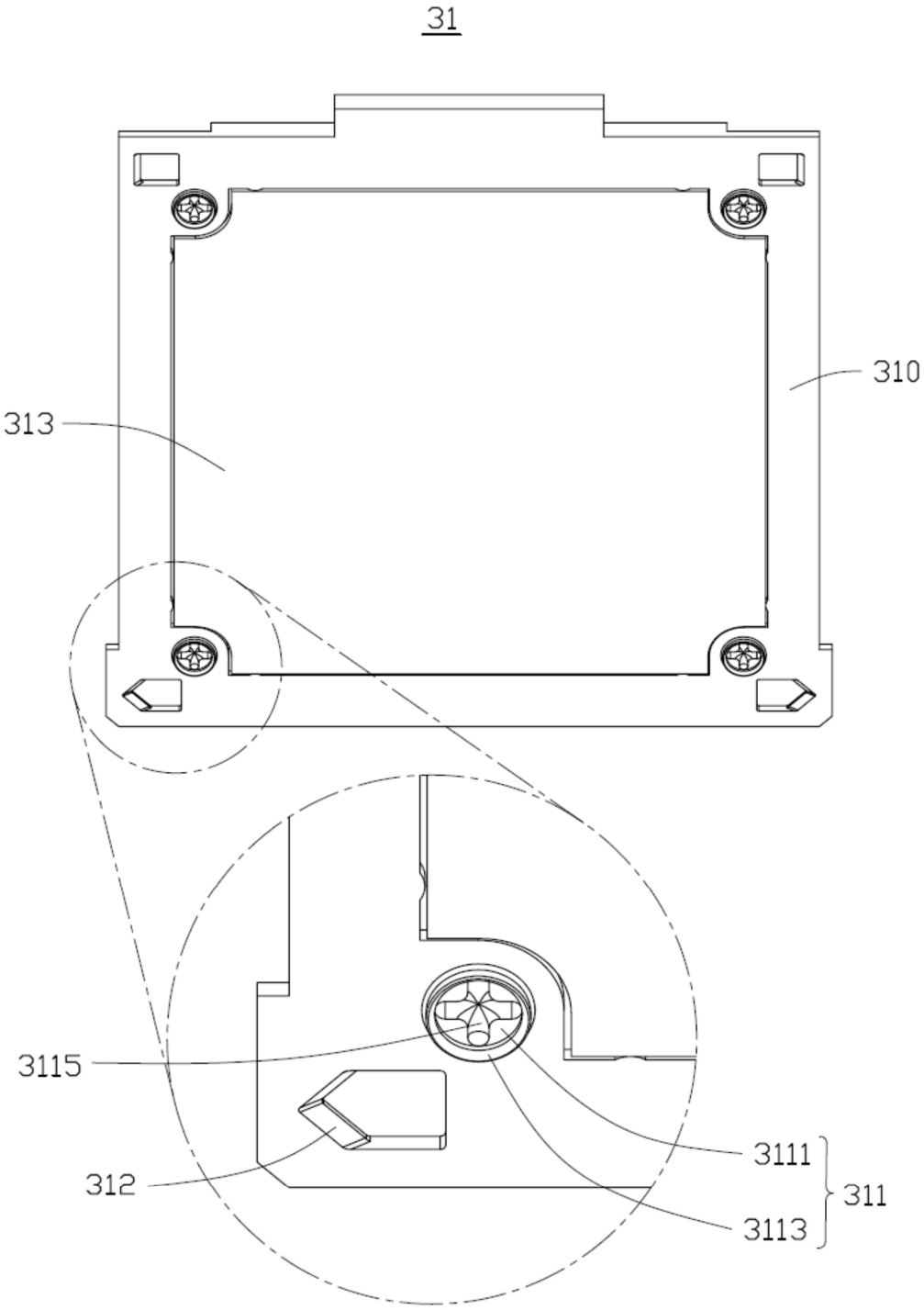

FIG. 8

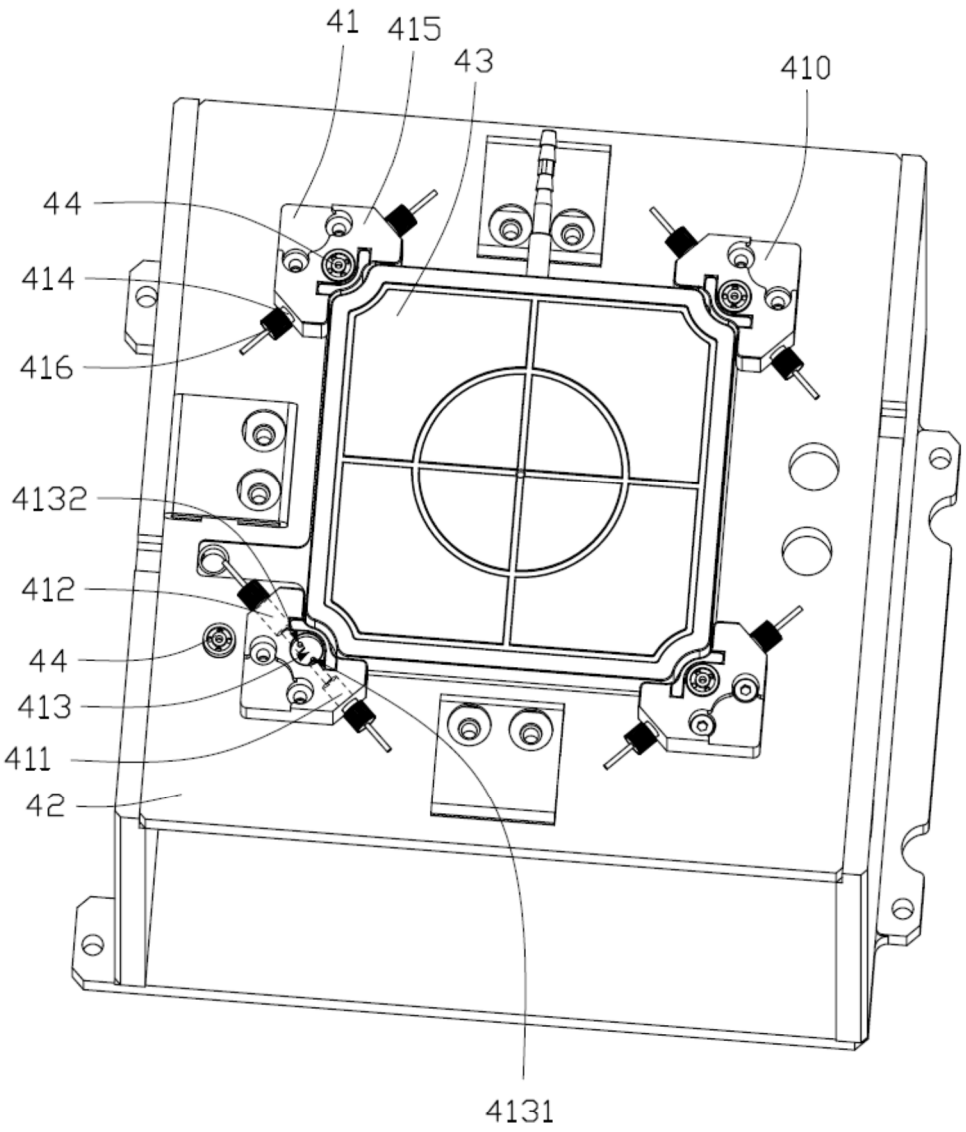

FIG. 9

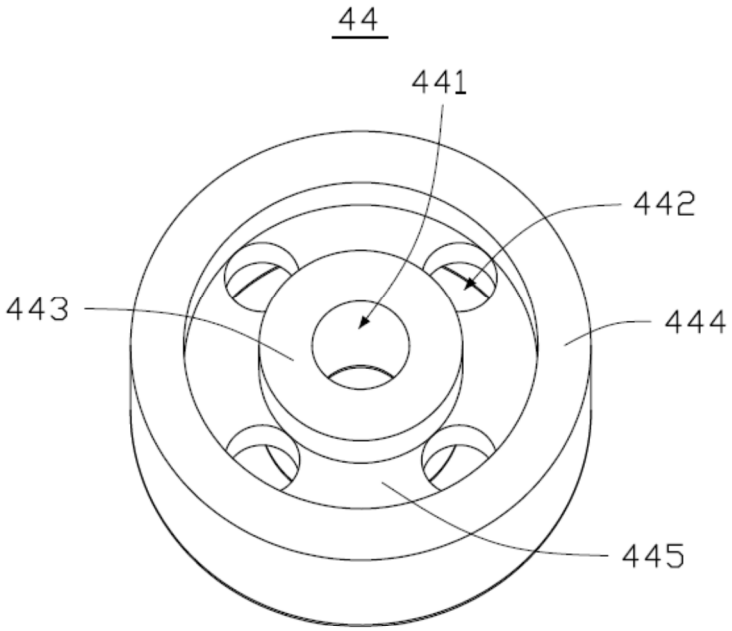

FIG. 10A

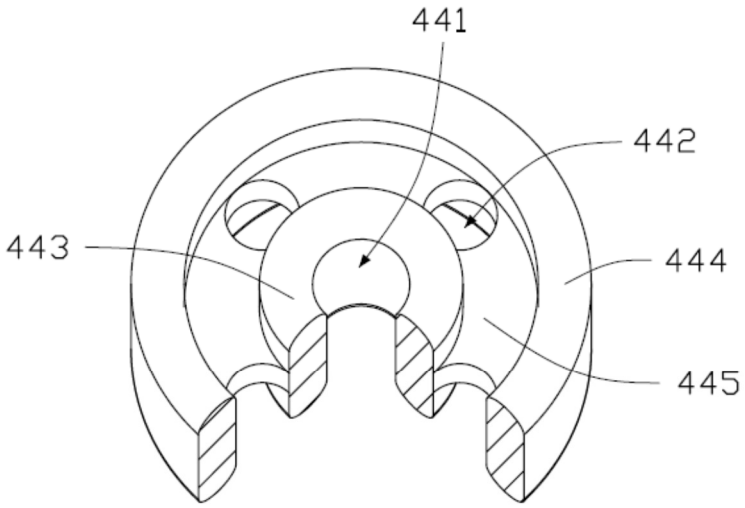

FIG. 10B

5

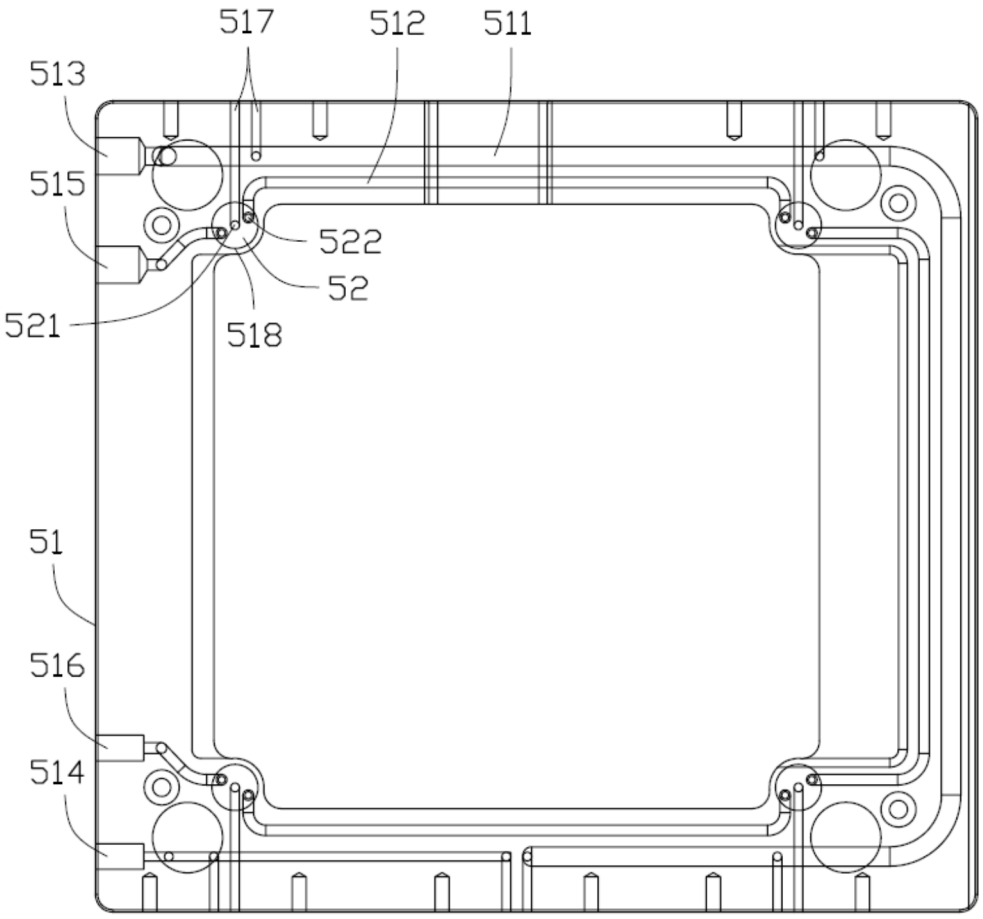

FIG. 11

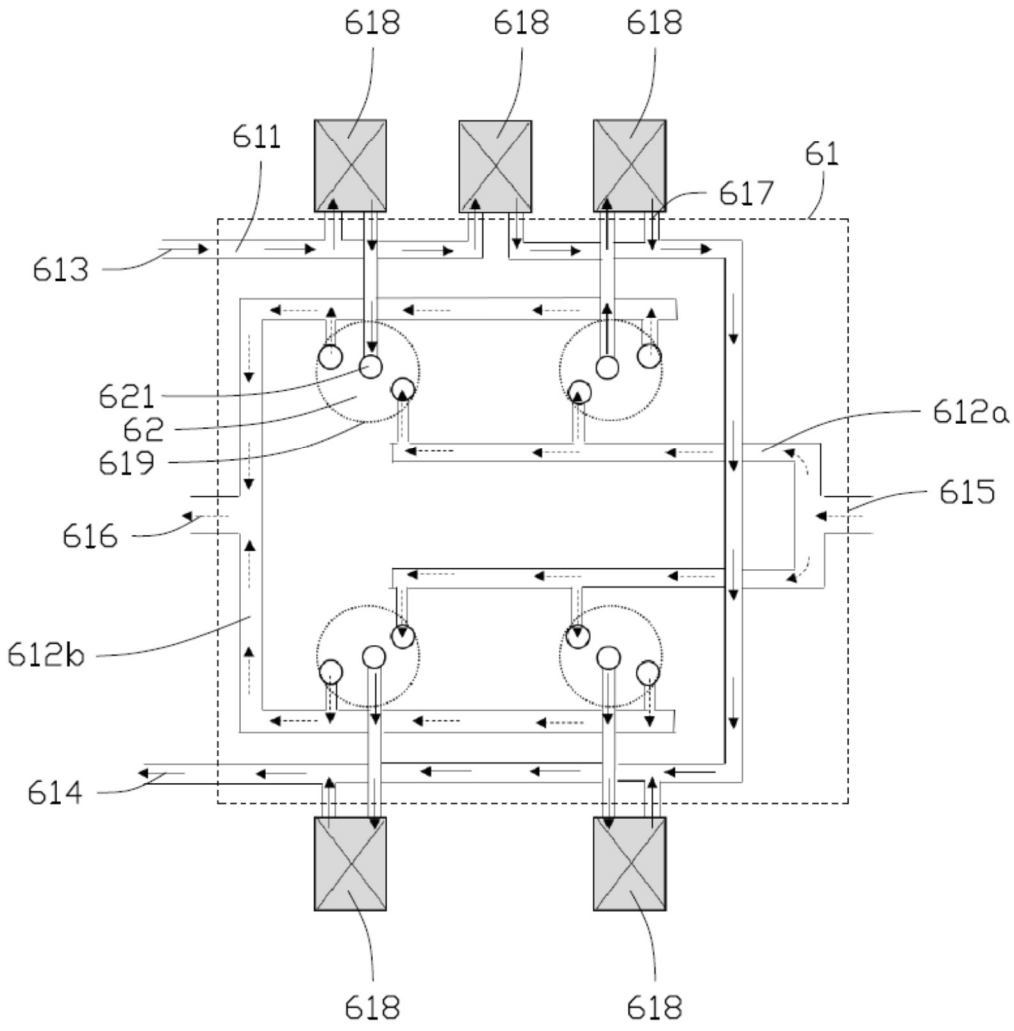
6
618
618
618
611
61
617
613
621
62
619
612a
615
616
612b
614
618
618

FIG. 12

7

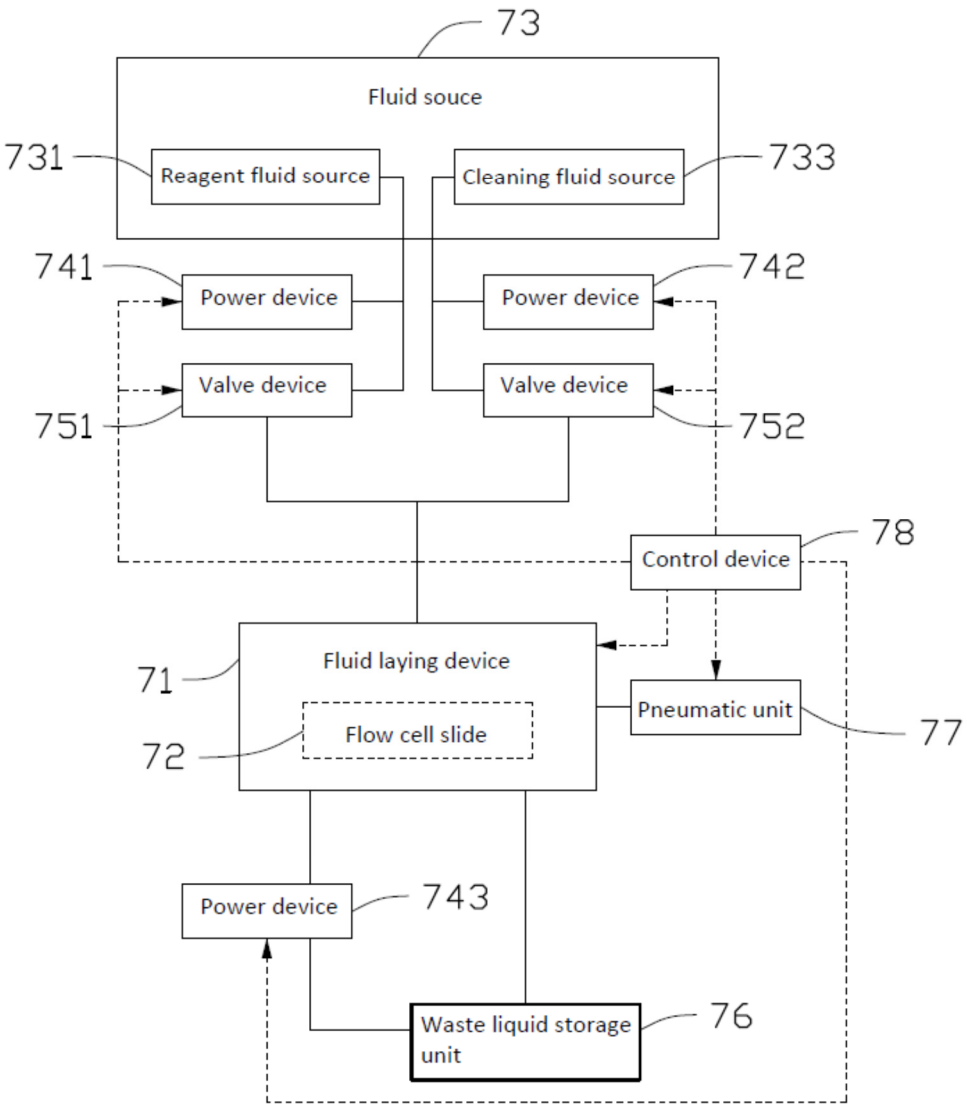
73
Fluid souce
731
Reagent fluid source
Cleaning fluid source
733
741
Power device
Power device
742
Valve device
Valve device
751
752
78
Control device
71
Fluid laying device
Pneumatic unit
77
72
Flow cell slide
Power device
743
Waste liquid storage unit
76

FIG. 13

8

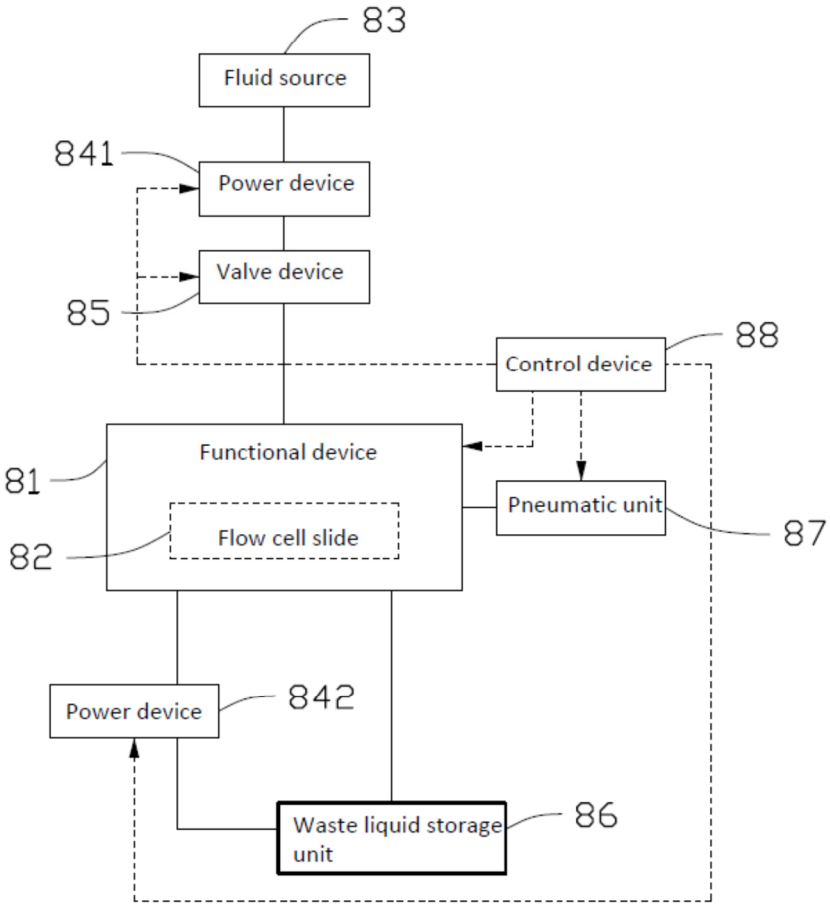
83
Fluid source
841
Power device
Valve device
85
88
Control device
Functional device
81
Pneumatic unit
87
Flow cell slide
82
Power device
842
Waste liquid storage unit
86

FIG. 14