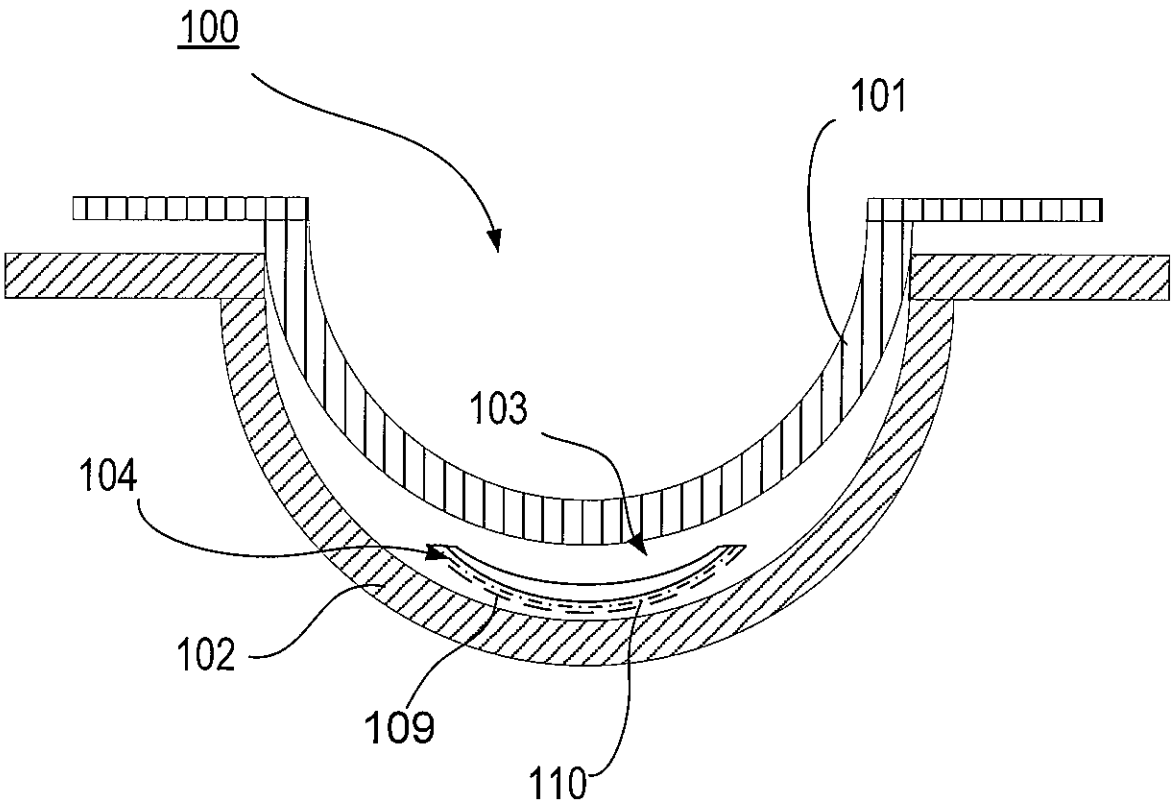

Figure 1

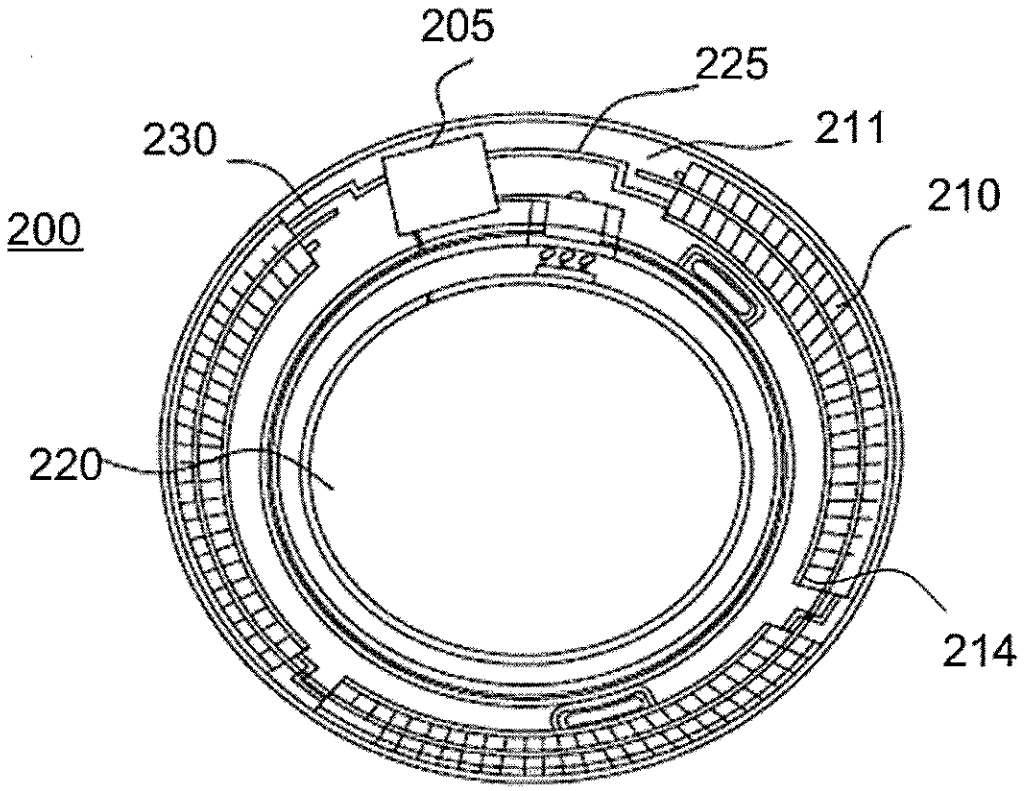

Figure 2A

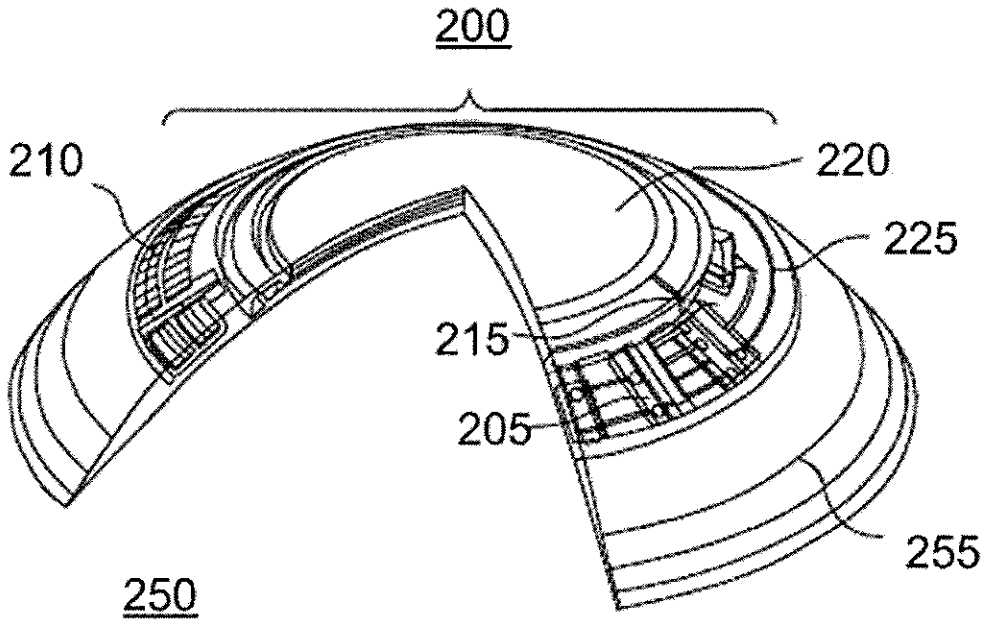

Figure 2B

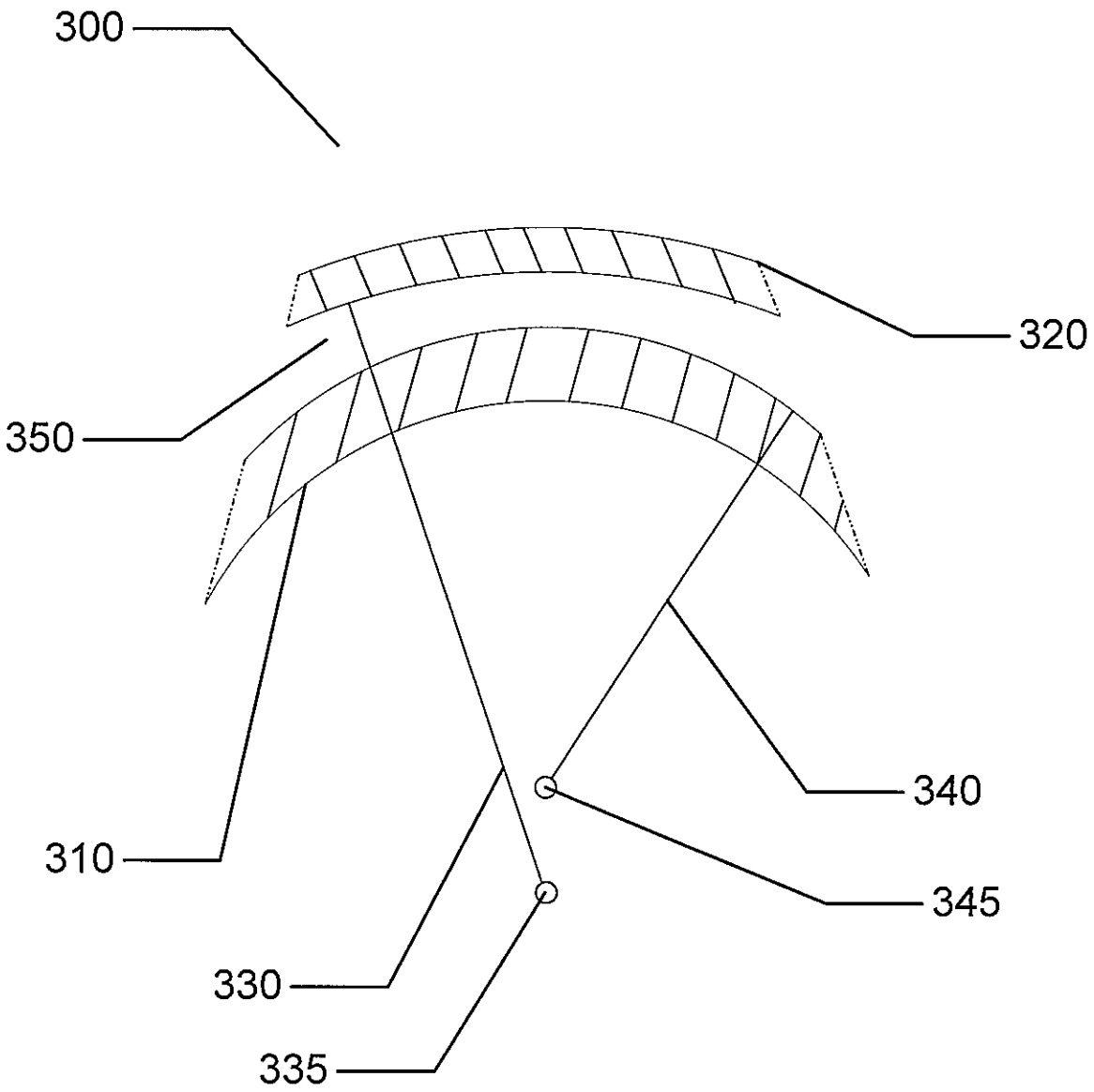

Figure 3

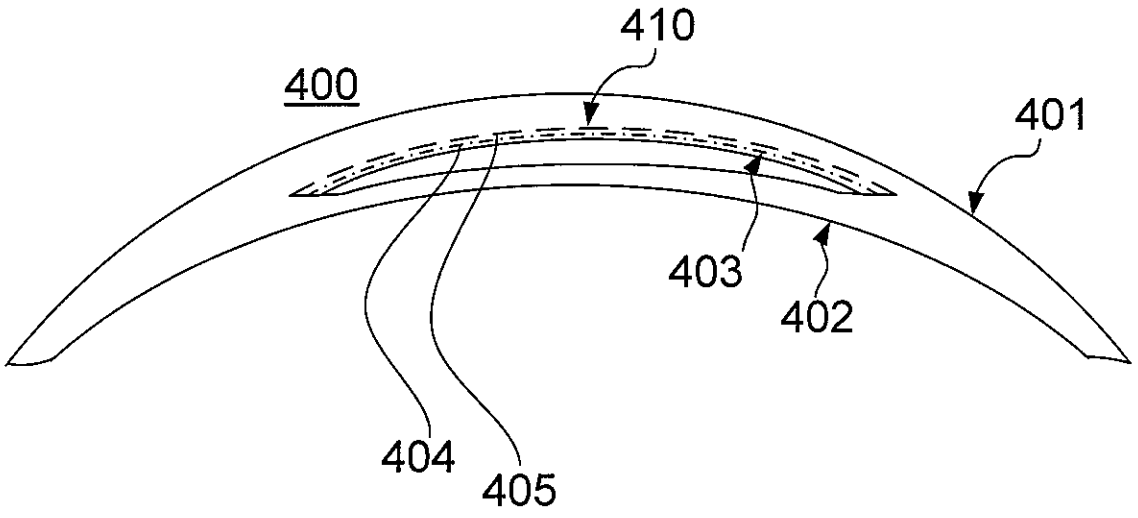

Figure 4

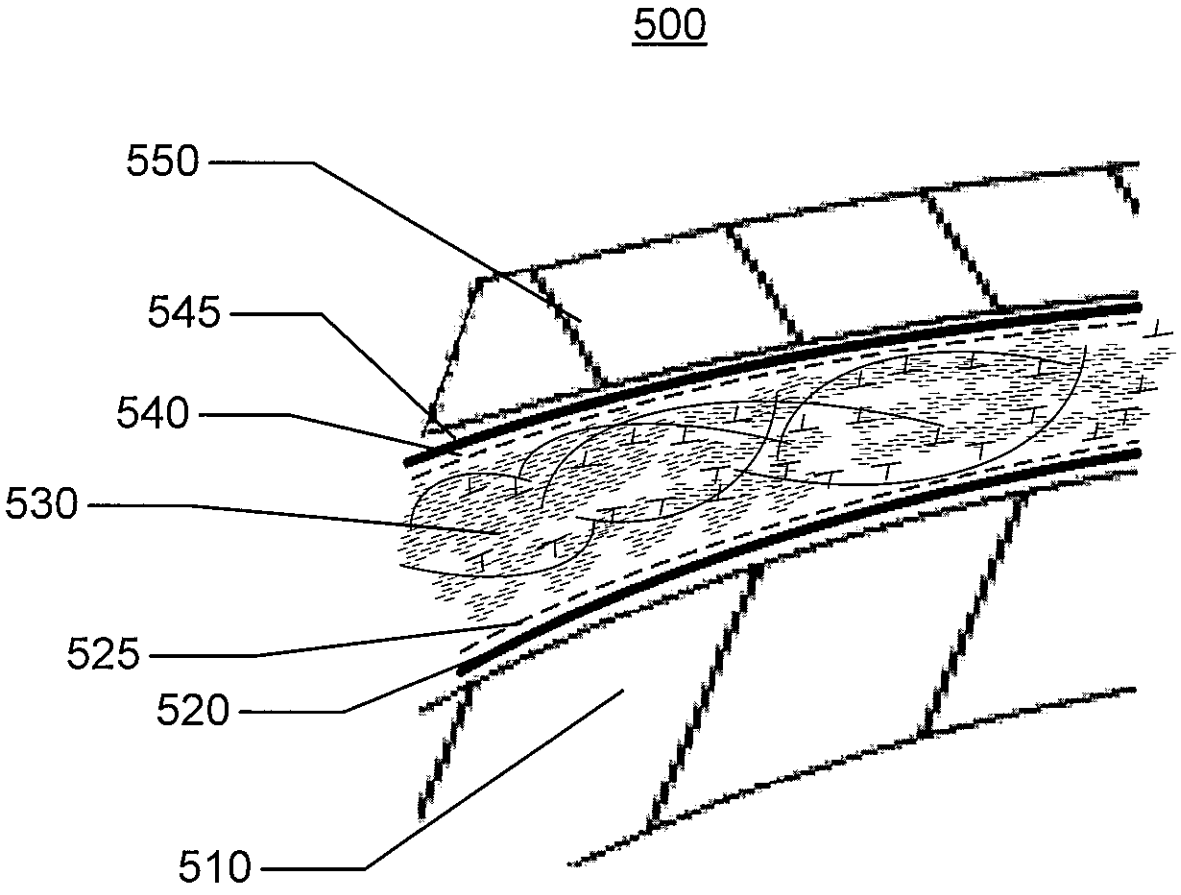

Figure 5

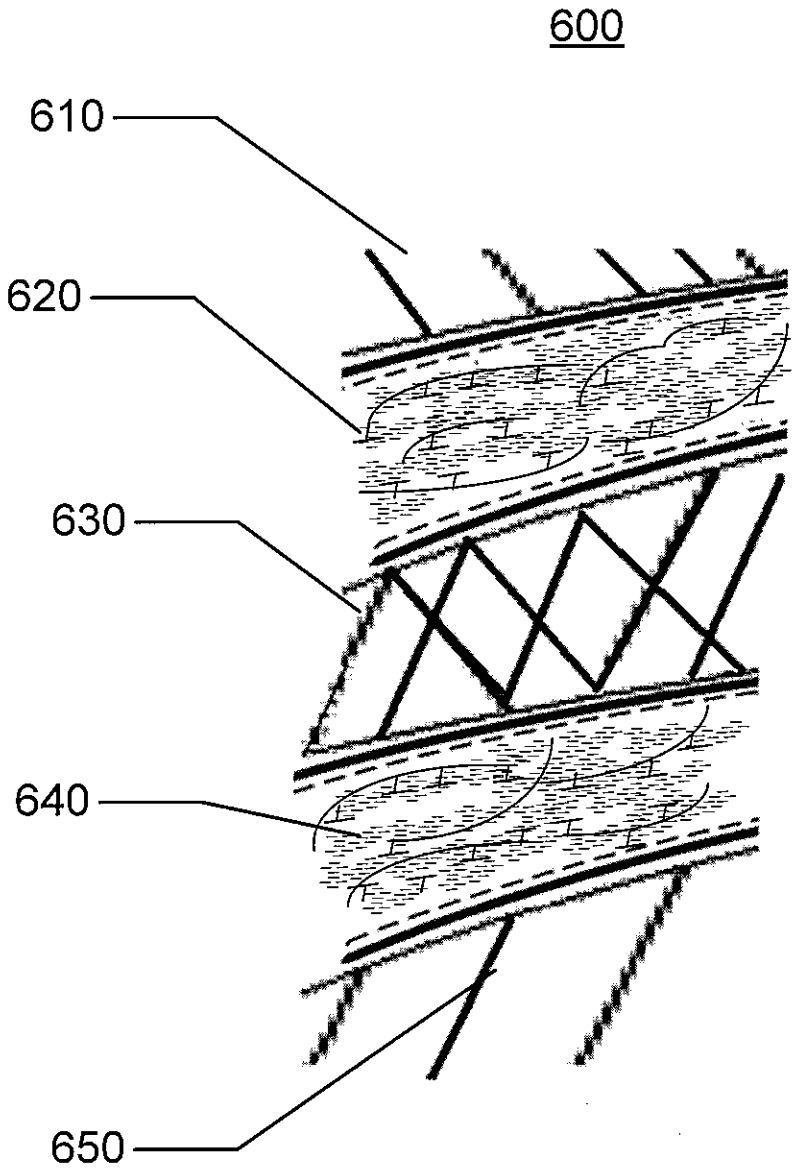

Figure 6

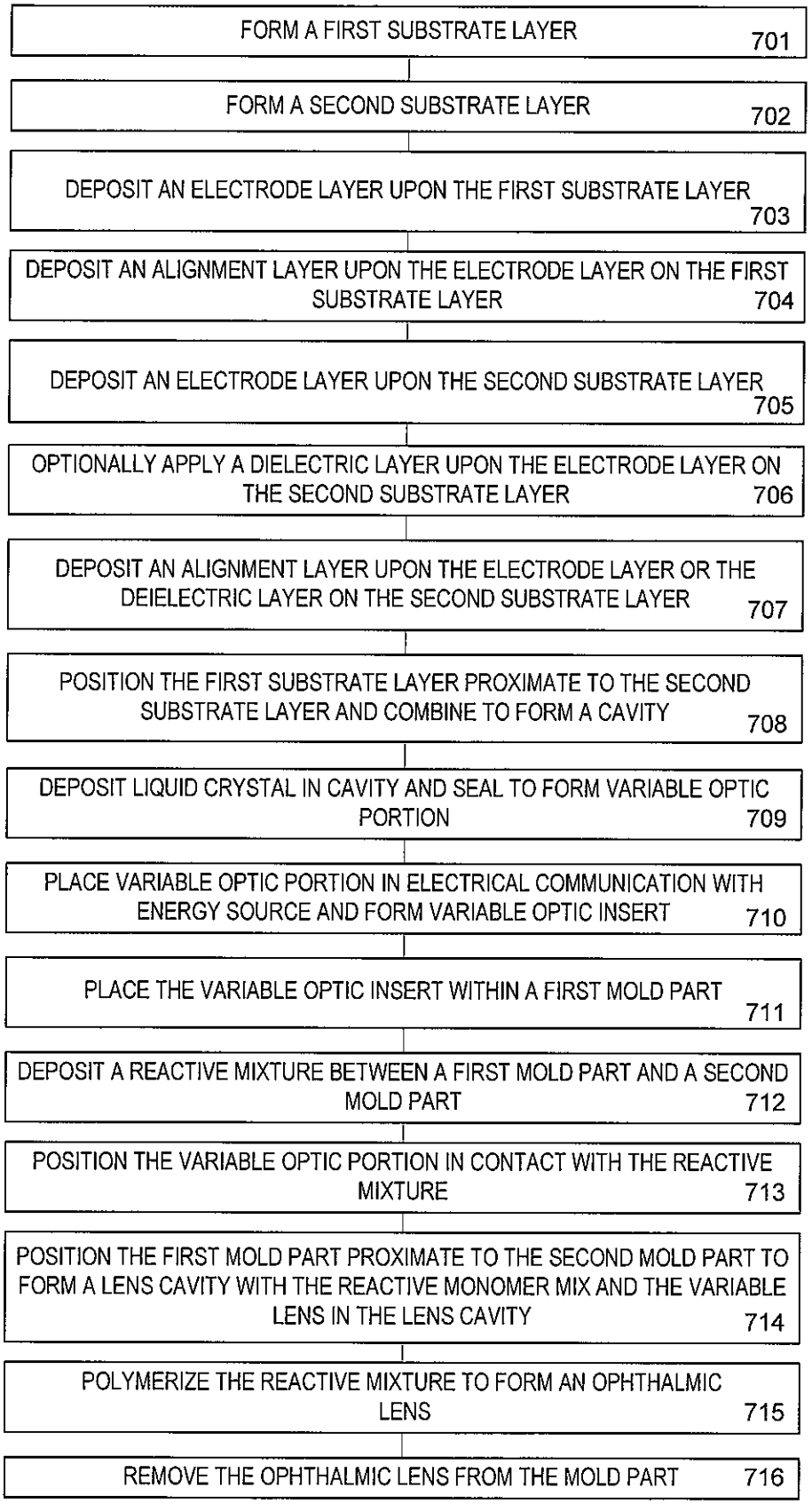
FORM A FIRST SUBSTRATE LAYER 701
FORM A SECOND SUBSTRATE LAYER 702
DEPOSIT AN ELECTRODE LAYER UPON THE FIRST SUBSTRATE LAYER 703
DEPOSIT AN ALIGNMENT LAYER UPON THE ELECTRODE LAYER ON THE FIRST SUBSTRATE LAYER 704
DEPOSIT AN ELECTRODE LAYER UPON THE SECOND SUBSTRATE LAYER 705
OPTIONALLY APPLY A DIELECTRIC LAYER UPON THE ELECTRODE LAYER ON THE SECOND SUBSTRATE LAYER 706
DEPOSIT AN ALIGNMENT LAYER UPON THE ELECTRODE LAYER OR THE DEIELECTRIC LAYER ON THE SECOND SUBSTRATE LAYER 707
POSITION THE FIRST SUBSTRATE LAYER PROXIMATE TO THE SECOND SUBSTRATE LAYER AND COMBINE TO FORM A CAVITY 708
DEPOSIT LIQUID CRYSTAL IN CAVITY AND SEAL TO FORM VARIABLE OPTIC PORTION 709
PLACE VARIABLE OPTIC PORTION IN ELECTRICAL COMMUNICATION WITH ENERGY SOURCE AND FORM VARIABLE OPTIC INSERT 710
PLACE THE VARIABLE OPTIC INSERT WITHIN A FIRST MOLD PART 711
DEPOSIT A REACTIVE MIXTURE BETWEEN A FIRST MOLD PART AND A SECOND MOLD PART 712
POSITION THE VARIABLE OPTIC PORTION IN CONTACT WITH THE REACTIVE MIXTURE 713
POSITION THE FIRST MOLD PART PROXIMATE TO THE SECOND MOLD PART TO FORM A LENS CAVITY WITH THE REACTIVE MONOMER MIX AND THE VARIABLE LENS IN THE LENS CAVITY 714
POLYMERIZE THE REACTIVE MIXTURE TO FORM AN OPHTHALMIC LENS 715
REMOVE THE OPHTHALMIC LENS FROM THE MOLD PART 716

Figure 7

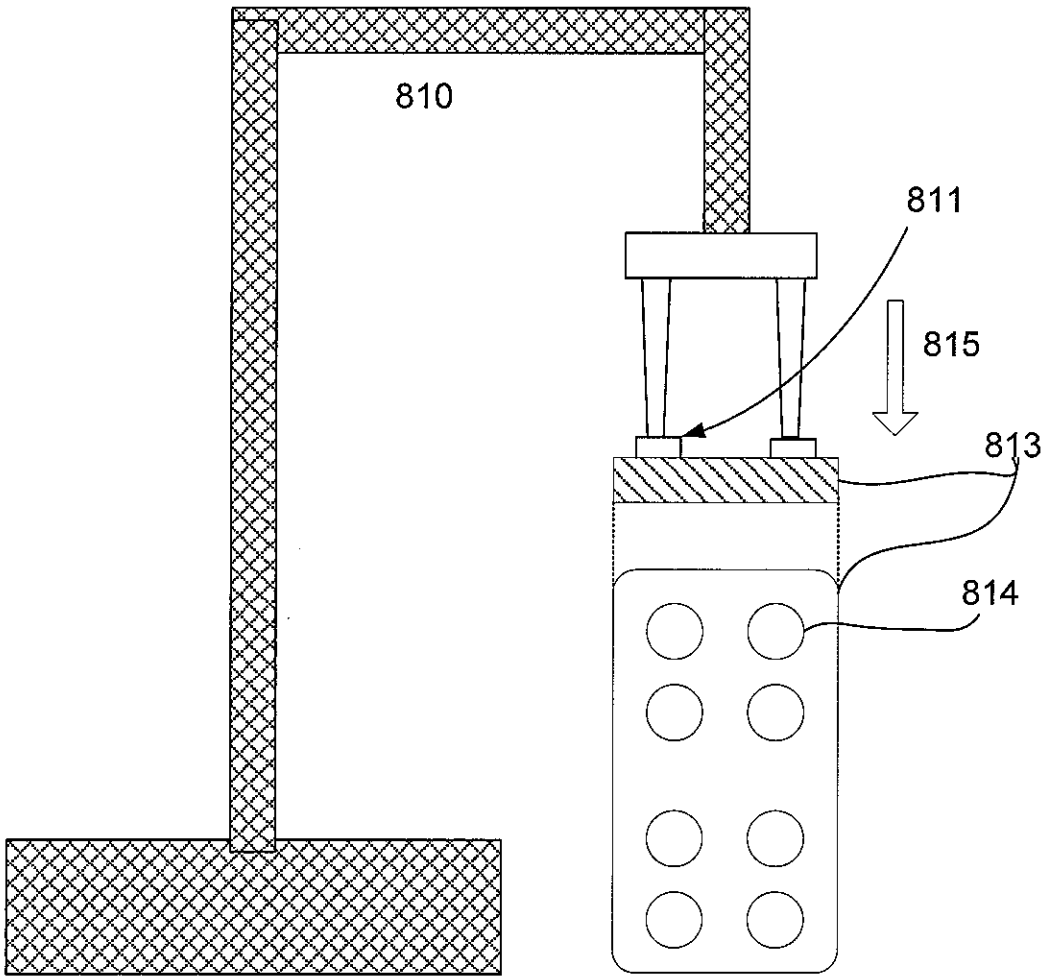

Figure 8

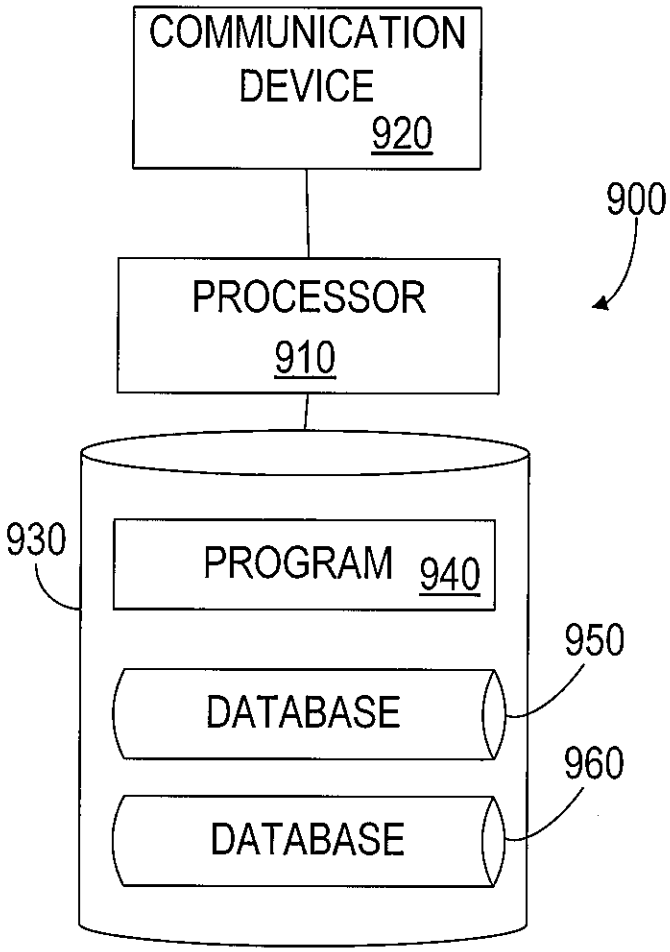
COMMUNICATION DEVICE 920
900
PROCESSOR 910
930
PROGRAM 940
950
DATABASE
960
DATABASE

Figure 9

Figure 10A

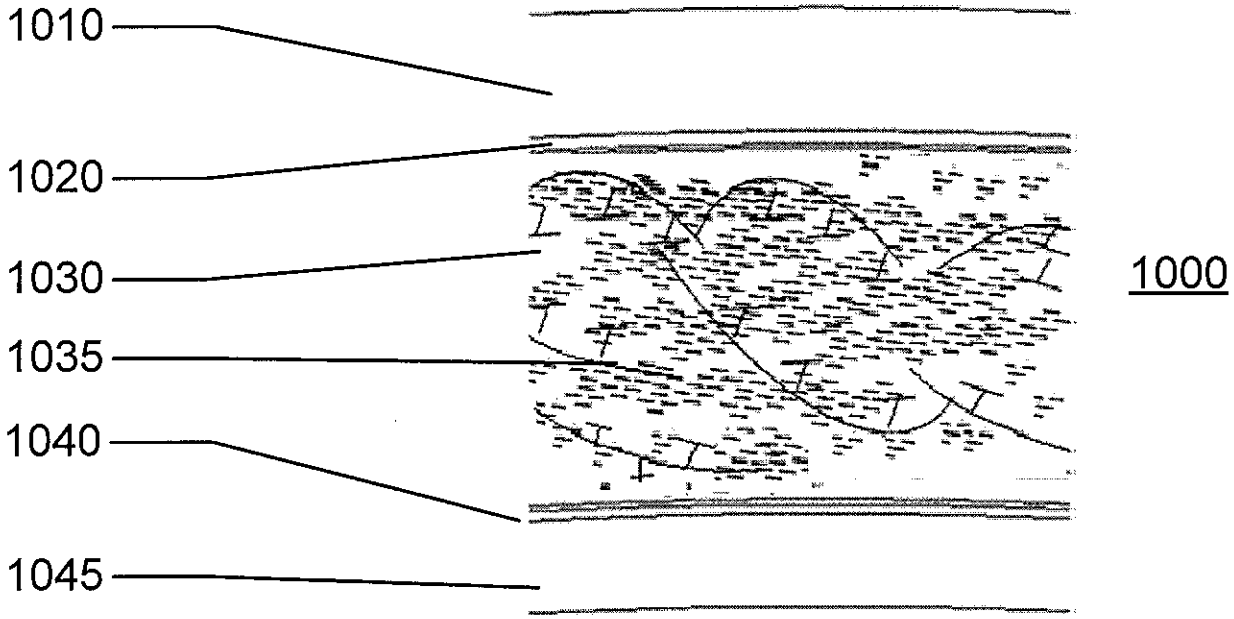

Figure 10B

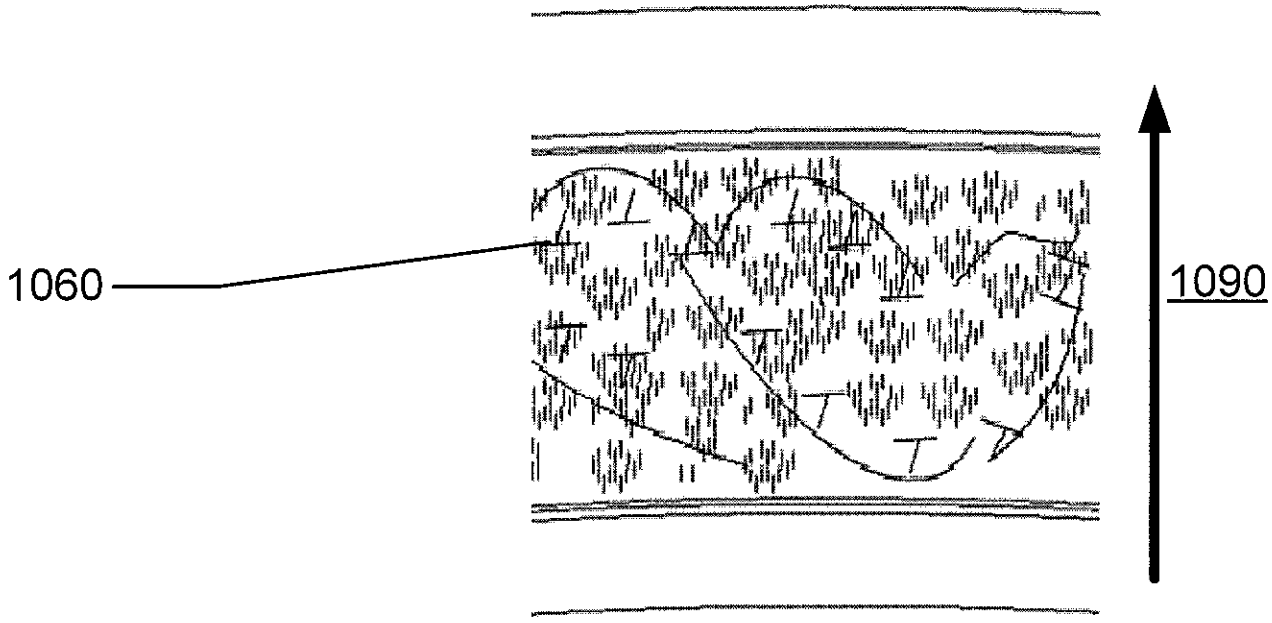

Figure 11B

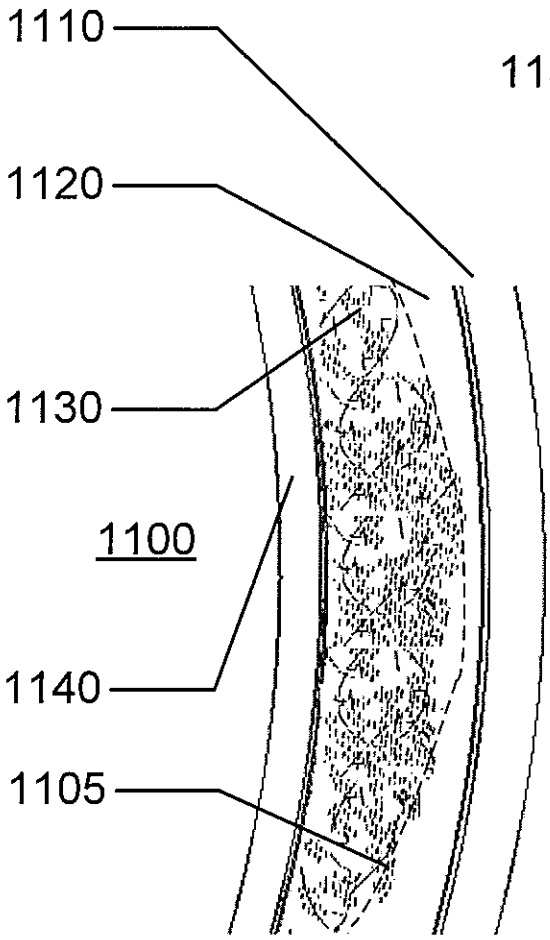

Figure 11A

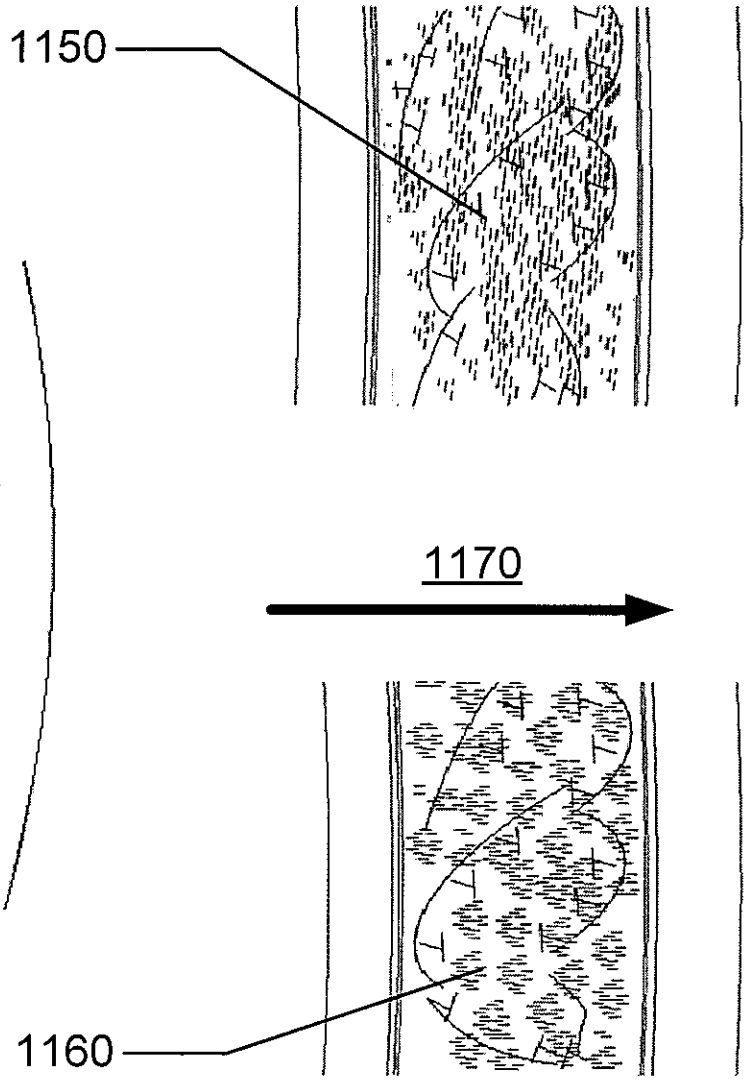

Figure 11C