(12) INTERNATIONAL APPLICATION PUBLISHED UNDER THE PATENT COOPERATION TREATY (PCT)

(19) World Intellectual Property Organization
International Bureau

(43) International Publication Date
8 October 2009 (08.10.2009)

PCT

(10) International Publication Number
WO 2009/123862 A3

(51) International Patent Classification:
E06B 9/00 (2006.01)

(21) International Application Number:
PCT/US2009/037616

(22) International Filing Date:
19 March 2009 (19.03.2009)

(25) Filing Language: English

(26) Publication Language: English

(30) Priority Data:
12/061,329 2 April 2008 (02.04.2008) US

(71) Applicant *(for all designated States except US)*: **THE PRESRAY CORPORATION** [US/US]; 159 Charles Colman Boulevard, Pawling, NY 12564 (US).

(71) Applicant and
(72) Inventor *(for all designated States except US)*: **FISHER, Wayne** [US/US]; 3083 Burrington Hill Road, Whitingham, VT 05361 (US).

(74) Agent: **SCHWEITZER, Fritz, L., Jr.**; Schweitzer Cornman Gross & Bondell LLP, 292 Madison Avenue, 19th Floor, New York, NY 10017 (US).

(81) Designated States *(unless otherwise indicated, for every kind of national protection available)*: AE, AG, AL, AM, AO, AT, AU, AZ, BA, BB, BG, BH, BR, BW, BY, BZ, CA, CH, CN, CO, CR, CU, CZ, DE, DK, DM, DO, DZ, EC, EE, EG, ES, FI, GB, GD, GE, GH, GM, GT, HN, HR, HU, ID, IL, IN, IS, JP, KE, KG, KM, KN, KP, KR, KZ, LA, LC, LK, LR, LS, LT, LU, LY, MA, MD, ME, MG, MK, MN, MW, MX, MY, MZ, NA, NG, NI, NO, NZ, OM, PG, PH, PL, PT, RO, RS, RU, SC, SD, SE, SG, SK, SL, SM, ST, SV, SY, TJ, TM, TN, TR, TT, TZ, UA, UG, US, UZ, VC, VN, ZA, ZM, ZW.

(84) Designated States *(unless otherwise indicated, for every kind of regional protection available)*: ARIPO (BW, GH, GM, KE, LS, MW, MZ, NA, SD, SL, SZ, TZ, UG, ZM, ZW), Eurasian (AM, AZ, BY, KG, KZ, MD, RU, TJ, TM), European (AT, BE, BG, CH, CY, CZ, DE, DK, EE, ES, FI, FR, GB, GR, HR, HU, IE, IS, IT, LT, LU, LV,

[Continued on next page]

(54) Title: FLOOD BARRIER SYSTEM

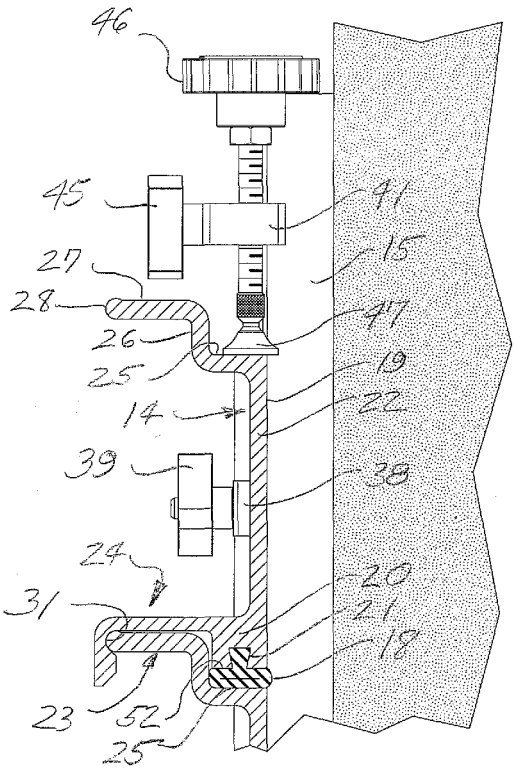

FIG. 5B

(57) Abstract: A flood barrier system for temporarily sealing an opening (11) in a wall structure (10) against the inflow of flood waters. The system comprises a plurality of elongated, horizontally disposed barrier elements (14) of a length somewhat greater than the width of the opening. The barrier elements are stacked vertically, one upon the other against the outer face of the wall structure. End clamps (38) engage opposite ends of the individual barrier elements (14) to press them snugly against the outer surface of the wall, providing seals along the opposite vertical side edges of the opening. The barrier elements incorporate a unique interlocking configuration that simplifies and expedites assembly of a flood barrier and strengthens the integrity of the assembled structure. Improved and simplified arrangements (38, 46) are provided for clamping the ends of the barrier elements and for applying downward pressure to the assembled barrier.

WO 2009/123862 A3

MC, MK, MT, NL, NO, PL, PT, RO, SE, SI, SK, TR), OAPI (BF, BJ, CF, CG, CI, CM, GA, GN, GQ, GW, ML, MR, NE, SN, TD, TG).

(88) Date of publication of the international search report: 30 December 2009

Published:

— *with international search report (Art. 21(3))*