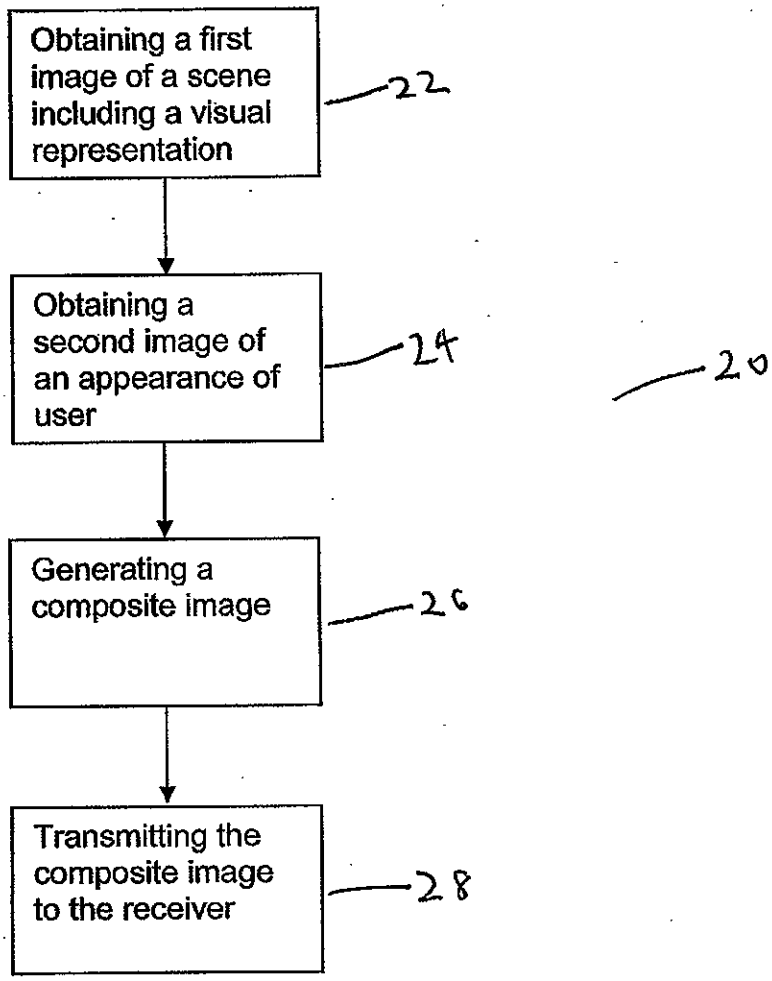
Obtaining a first image of a scene including a visual representation
22
Obtaining a second image of an appearance of user
24
20
Generating a composite image
26
Transmitting the composite image to the receiver
28

Figure 1

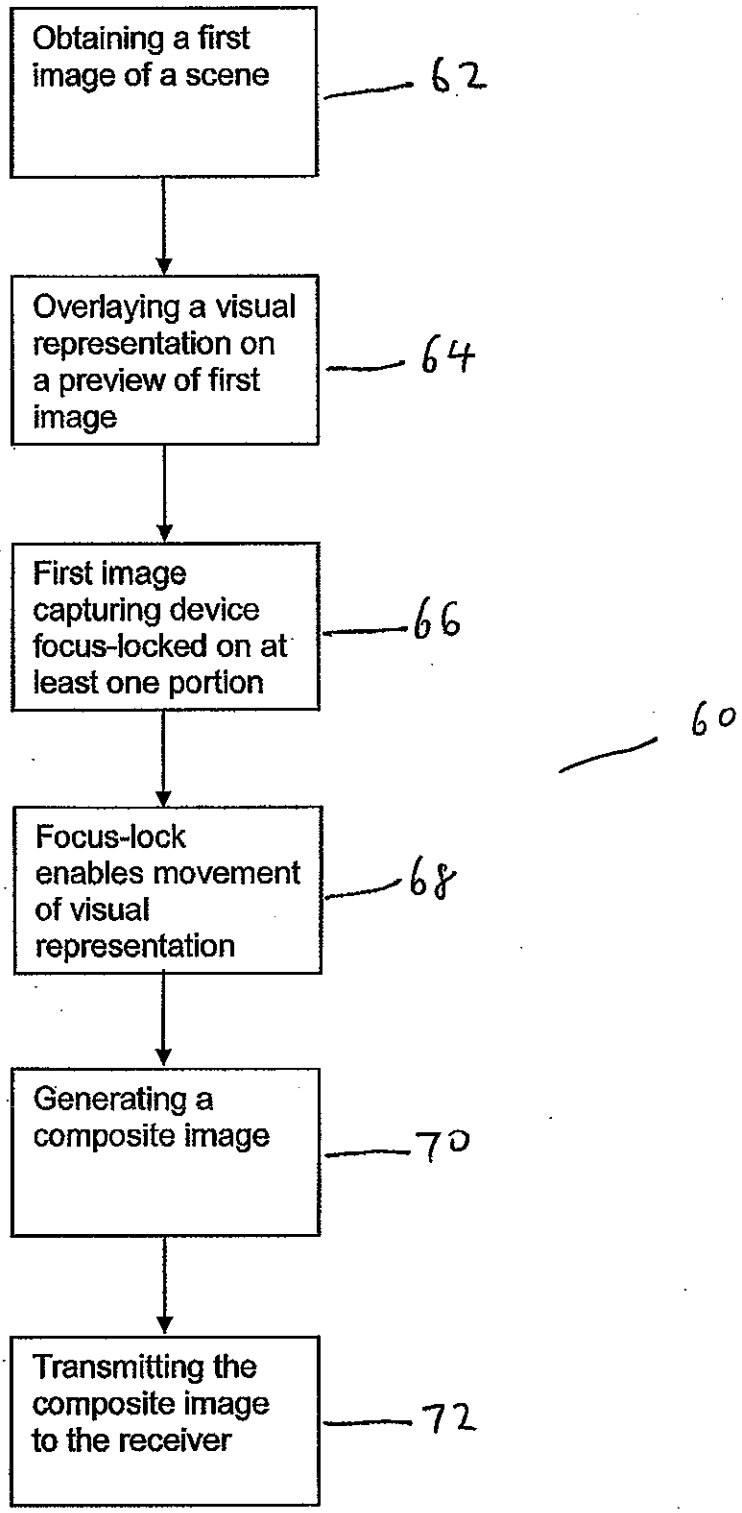
Obtaining a first image of a scene
62
Overlaying a visual representation on a preview of first image
64
First image capturing device focus-locked on at least one portion
66
60
Focus-lock enables movement of visual representation
68
Generating a composite image
70
Transmitting the composite image to the receiver
72

Figure 2

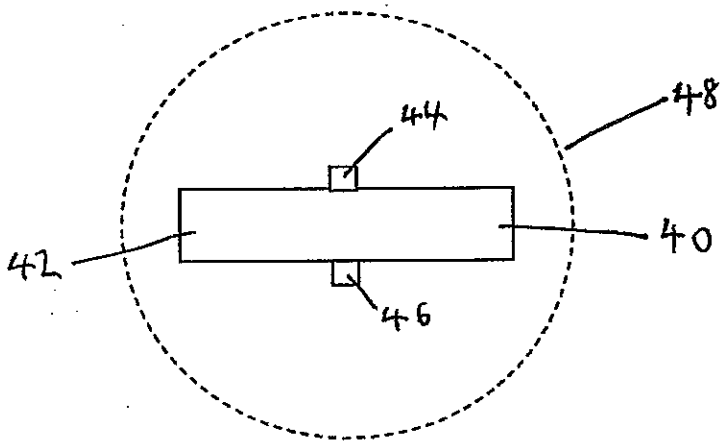

Figure 3

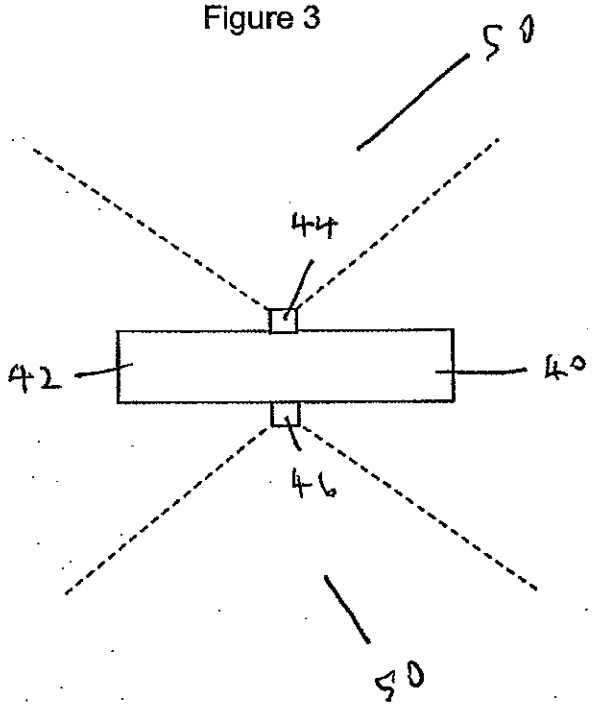

Figure 4

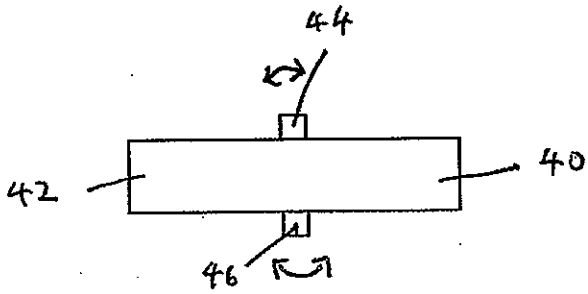

Figure 5

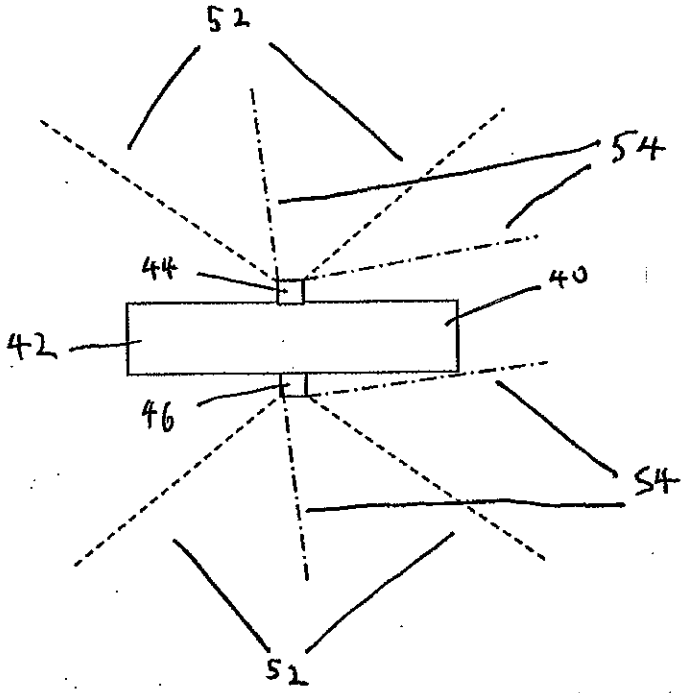

Figure 6

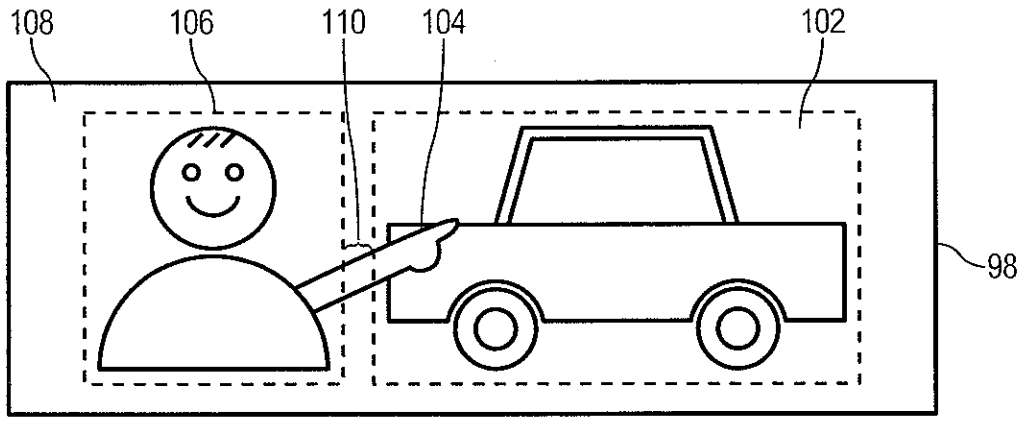

Figure 7

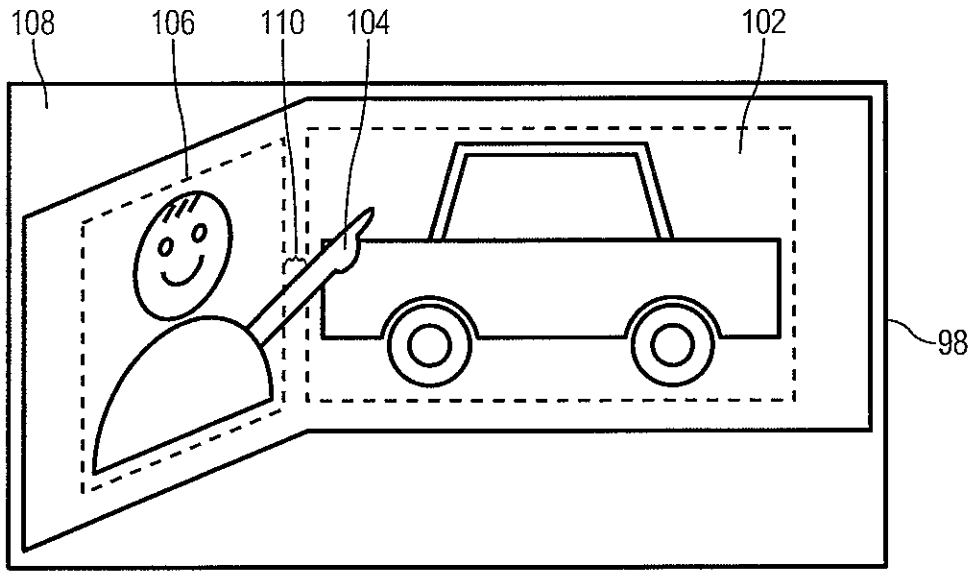

Figure 8

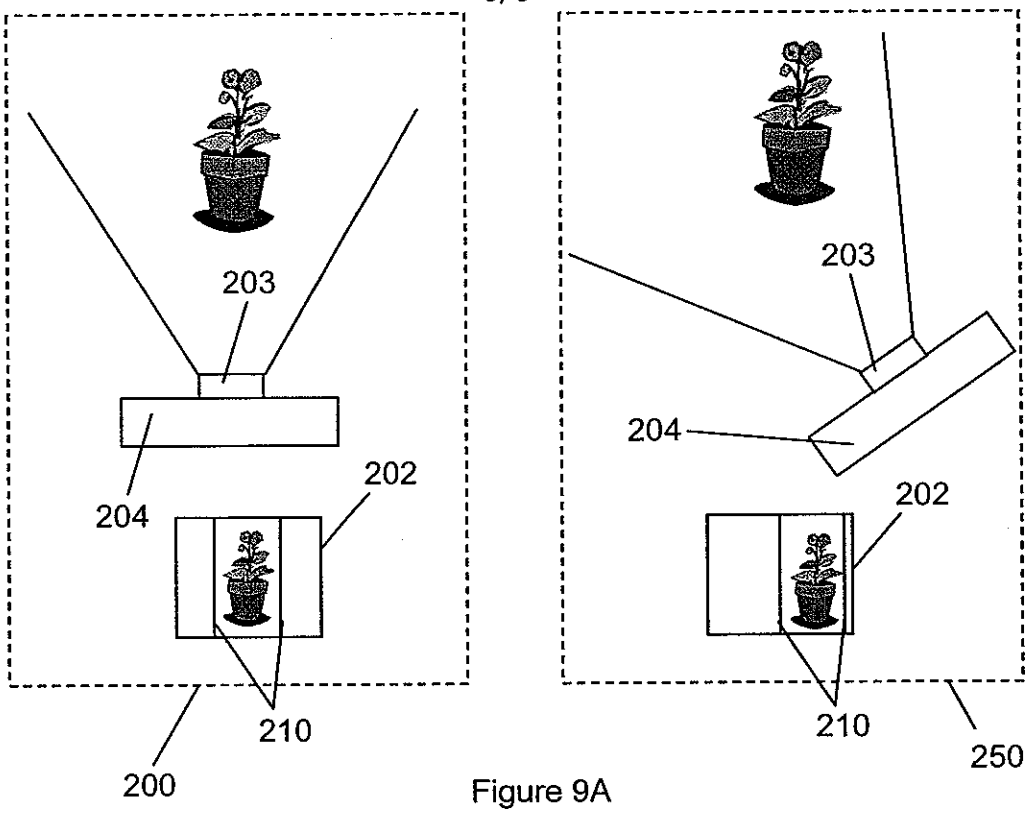

Figure 9A

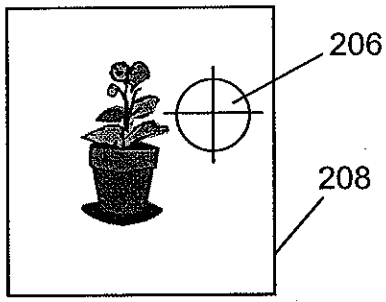

Figure 9B

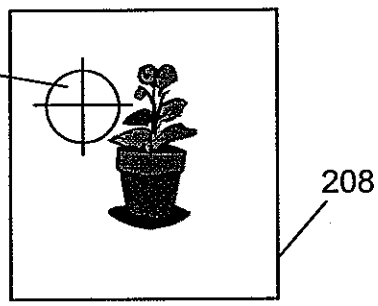

Figure 9C