AN ELECTROMAGNETIC ACTUATOR FOR A LOW VOLTAGE CIRCUIT BREAKER

The present invention relates in a general manner to an electromagnetic actuator for a low voltage circuit breaker.

In low voltage circuit breakers (for example a mains voltage 220 V and 50 Hz) designed to let a relatively high current flow (for example a rated current of 125 A), it has been observed for a very long time that there was a problem related to the difficulty of making the electrical contacts unstick reliably when tripping of the circuit breaker takes place.

Tripping of the circuit breaker takes place automatically, by movement of a movable contact away from a stationary contact when the electrical current intensity flowing in the circuit breaker exceeds a preset threshold value.

The reliability of tripping of the circuit breaker is generally appreciated in the following manner.

(a) Tripping must take place each time the intensity exceeds the threshold value.
(b) Tripping must always take place very quickly after the intensity has exceeded the threshold value.
(c) Tripping must take place independently from the intensity of the fault current, after said threshold has been exceeded.

A well-known phenomenon which is liable to affect the reliability of tripping of the circuit breaker lies in the fact that various physical or chemical phenomena may occur at the level of the point of contact between the movable electrical contact and the stationary electrical contact and may result in a "sticking" effect of the electrical contacts.

To increase the reliability of tripping of the circuit breaker, it has been proposed for a long time to arrange an electromagnetic actuator device in the circuit breaker. A large number of electromagnetic actuators exist for low voltage and high current circuit breakers. An electromagnetic actuator of this kind is for example described in the Patent DE-A-942,455 or the Patent EPA-0,410,257.

A known electromagnetic actuator of this kind comprises :
an electromagnetic body including a core surrounded by a coil and two parallel flanks conducting the magnetic flux and each presenting opposite first and second ends ;
a blade pivotally mounted so as to be able to occupy a rest position in which it is separated from said first ends of the two flanks and an actuation position in which it is magnetically attracted into contact with said first ends of the two flanks ;
a stationary contact situated in or near to an air-gap formed between said second ends of the two flanks ;
a movable contact support arm pivotally mounted so as to move in the air-gap moving the movable contact joined thereto between said rest position in which the movable contact is in contact with the stationary contact, and said actuation position in which the movable contact is separated from the stationary contact ; and
a striker formed by an elongated part interposed between the blade and the movable contact support arm.

More precisely, in the document DE-A-942,455, as represented here in figures 1A and 1B which schematically illustrate the prior art, it can be seen that the blade (v) comprises a central zone in which the electromagnetic attraction effect takes place, an end at the level of which an articulation (w) is arranged to make the blade pivot and another opposite end at the level of which a striker (f) is fixed. A movable contact arm (d) is arranged in appreciably parallel manner and

comprises at the level of one end an articulation (p) and near to its opposite other end a movable contact. If a longitudinal mid-plane (25) passing through the electromagnetic body (e) is considered, it can be seen that the articulation (p) is located opposite the articulation (w) with respect to this longitudinal mid-plane (25). Moreover, the free end of the striker (f) is designed to come into contact with a central zone of the movable contact arm (d), that is to say that the striker (f) pushes the movable contact arm (d) at a point situated opposite the articulation (w) with respect to this longitudinal mid-plane (25).

This results in the movement of the striker (f) being greater than the movement of the central zone of the blade (v) at the level of which the electromagnetic attraction effect takes place. The blade (v) therefore constitutes a lever which amplifies the movement at the level of the striker (f). Consequently, the force at the level of the striker (f) is smaller than the electromagnetic attraction force at the level of the central zone of the blade (v). Furthermore, the striker (f) pushes the movable contact arm (v) in a central zone, which means that the movement at the level of the movable contact is greater than the movement of the striker (f) due to the fact that the movable contact arm (d) acts as a lever which amplifies the movement of the striker (f). These two combined phenomena of leverage movement amplifier at the level of the blade (v) and at the level of the movable contact arm (d) results in a very small movement at the level of the electromagnetic attraction zone of the blade (v) producing a relatively large movement at the level of the movable contact. Naturally, a reduction of the unsticking force at the level of the movable contact also occurs in the same ratio as the movement amplification ratio.

Such an arrangement does not enable reliable tripping of the circuit breaker to be obtained in practice as the unsticking

force is not sufficient at movable contact level when the tripping action takes place. Moreover, due to this movement amplification, to obtain a sufficient unsticking force of the movable contact, the attraction force of the blade (v) has to be relatively high. To obtain a relatively high attraction force of the blade, either the magnetic flux intensity has to be increased or the distance separating the blade (v) from the electromagnetic body (e) decreased. Manufacture of an electromagnetic actuator of this kind is complicated and presents large dimensions incompatible with the volume of the circuit breaker case.

One object of the present invention is to propose an electromagnetic actuator for a low voltage circuit breaker presenting a greater reliability of operation of its tripping.

Another object of the present invention is to propose such an electromagnetic actuator providing greater precision of the electrical current intensity threshold which causes its tripping.

Another object of the present invention is to propose such an electromagnetic actuator able to be arranged in a more compact manner.

According to one feature of the invention, an electromagnetic actuator for a low voltage circuit breaker is proposed, this electromagnetic actuator comprising : an electromagnetic body including a core surrounded by a coil and two parallel flanks conducting the magnetic flux and each presenting opposite first and second ends ; a blade pivotally mounted around an articulation so as to be able to oocupy a rest position in which it is separated from said first ends of the two flanks and an actuation position in which it is magnetically attracted into contact with said first ends of the two flanks ; a stationary contact situated in or near to an air-

gap formed between said second ends of the two flanks ; a movable contact support arm pivotally mounted around an articulation so as to move in the air-gap moving the movable contact joined to it between said rest position in which the movable contact is in contact with the stationary contact and said actuation position in which the movable contact is separated from the stationary contact ; and a striker formed by an elongated part interposed between the blade and the movable contact support arm ; wherein the articulation of the blade and the articulation of the movable contact support arm are located on one and the same side with respect to the electromagnetic body and wherein the striker is joined to the blade at a connecting point situated in an intermediate zone between the articulation of the blade and an opposite end zone of the blade at the level of which it is magnetically attractable towards said first ends of the two flanks.

According to a particular embodiment of the invention, the striker is arranged in such a way that its longitudinal direction makes an angle of 90° ± 30° with the longitudinal direction of the blade and also makes an angle of 90° ± 30° with the longitudinal direction of the movable contact arm.

These objects, features and advantages, and others, of the present invention will become more clearly apparent from the following detailed description of one embodiment, illustrated by the accompanying drawings in which :

Figures 1A and 1B are the same schematic views of an electromagnetic actuator for a low voltage circuit breaker of the prior art as previously described and commented, figure 1A representing the device in a rest position and figure 1B representing the same device in an actuation position ;

Figures 2A and 2B are the same schematic views of an electromagnetic actuator for a low voltage circuit breaker according

to the present invention, figure 2A representing the device in a rest position and figure 2B representing the device in an actuation position ;

Figure 3 is a simplified side view of a particular embodiment of an electromagnetic actuator according to the present invention and of the low voltage circuit breaker in which it is fitted, certain parts having been removed for the sake of clarity ;

Figure 4 is a perspective view of the essential parts of the electromagnetic actuator represented in figure 3.

Figure 5 is a side view of the electromagnetic actuator of figure 4 ; and

Figure 6 is a top view of the electromagnetic actuator of figure 4.

If we refer to figure 3, a particular embodiment of an electromagnetic actuator for a low voltage circuit breaker according to the invention is represented. The circuit breaker 1 comprises a case 2 which houses a stationary contact 3, a movable contact 4 which is mounted at the end of a movable contact arm 5, an extinguishing chamber 6 and various electrical connection elements (not represented) enabling the stationary and movable contacts to be connected to terminals (not represented). All these elements are well known from the prior art and do not require a more detailed description here. The object of the present invention relates more particularly to the circuit breaker sub-assembly which forms what is commonly called "an electromagnetic actuator". The electromagnetic actuator serves the purpose of bringing about tripping of the circuit breaker, i.e. opening of the electrical contact when the electrical current intensity exceeds a preset threshold. The electromagnetic actuator

serves the purpose of bringing about this tripping abruptly, i.e. of bringing about a very high-speed separation of the stationary and movable contacts 3, 4.

The electromagnetic actuator according to the present invention is essentially formed by an electromagnetic body 7, a pivotally mounted blade 8, and a striker 9.

If we refer in particular to figures 4, 5 and 6, it can be seen that the electromagnetic body 7 includes in a general manner a cylindrical-shaped core 10 surrounded by a coil (not represented) or at least one turn, and two flanks 11, 12 which are arranged parallel to one another, extending perpendicularly to the longitudinal axis of the core 10. The flank 11 presents a first end 13 directed towards the blade 8 and a second opposite end 14 and in the same way the flank 12 presents a first end 15 directed towards the blade 8 and a second opposite end 16. The first ends 13 and 15 form flat faces which are coplanar and which are directed towards the blade 8. The second ends 14 and 16 form flat faces which face one another being separated from one another by a certain distance in order to form an air-gap 17 between them. The blade 8 presents a flat face 18 which faces the ends 13 and 15 of the electromagnetic body 7.

When the electromagnetic actuator is at rest, the blade 8 is situated a certain distance from the electromagnetic body 7, i.e. its face 18 is situated a certain distance from the faces of the ends 13 and 15 thus respectively forming an air-gap 19 and an air-gap 20. When an electrical current flows in the coil (not represented) which surrounds the central part of the core 10, a first magnetic flux is set up in a closed loop passing successively through the core 10, a part of the flank 11, the air-gap 19, the blade 8, the air-gap 20 and a part of the flank 12. At the same time, a second magnetic flux is set up in a closed loop passing successively through the core 10,

the other part of the flank 11, the air-gap 17 and the other part of the flank 12.

The blade 8 is mounted oscillating by means of an articulation 21 and the movable contact arm 5 is also mounted oscillating by means of an articulation 22. As can be seen in particular in figures 3 and 5, the stationary contact 3 is mounted in the air-gap 17 or close to the latter and at least a part of the movable contact arm 5 extends through the air-gap 17. The striker 9 is presented in the form of an elongated part one of whose ends is joined by means of an articulation 23 to the blade 8 and whose other free end 24 is located near to the movable contact arm 5.

The electromagnetic striker according to the present invention as previously described with respect to figures 3 to 6 operates in a manner which will now be explained with reference to figures 2A and 2B. In figure 2A, the same essential elements can be distinguished schematically as those which were described previously. For this reason, the same reference numbers have been used in figures 2A and 2B as in figures 3 to 6 of the particular embodiment in order to make the operation of the device easier to understand. In figure 2A, the plotting of a longitudinal mid-plane of the electromagnetic body 7 has been represented by a chain-dotted line 25. This mid-plane 25 is oriented so as to correspond to a plane including the loops of the previously described magnetic fluxes. (A mid-plane 25 has likewise been traced in figures 1A and 1B which represent the prior art and which were described previously). In figure 2A, it can be seen that the articulation 21 of the blade 8 is located a certain distance from the plane 25 and that the articulation 22 of the movable contact arm 5 is located a certain distance from the plane 25 but on the same side as that of the articulation 21 with respect to this plane 25. It can also be said that the articulation 21 of the blade 8 and the articulation 22 of the

movable contact arm 5 are located on one and the same side with respect to the electromagnetic body 7. It can also be seen that the surface 18 of the blade 8 which faces the surfaces 13 and 15 of the ends of the flanks 11 and 12 of the electromagnetic body 7 is a surface which is situated in an end zone 26 of the blade 8. It can furthermore be seen that the articulation 23 which joins the striker 9 to the blade 8 is situated in a central zone of the blade 8, i.e. is situated between the end zone 26 and the articulation 21. It can moreover be seen that the free end 24 of the striker 9 is situated near to the movable contact arm 5 so as to press against this movable contact arm 5 at a contact point 27 located in a central zone of the movable contact arm 5, i.e. in a zone situated between a free end 28 of the movable contact arm 5 which supports the movable contact 4 and the articulation 22 of the movable contact arm 5. In addition, the striker 9 is arranged in such a way that its longitudinal direction is appreciably perpendicular to the longitudinal direction of the blade 8 and also appreciably perpendicular to the longitudinal direction of the movable contact arm 5. The expression "appreciably perpendicular" is used here to designate an angle comprised between 60 and 120°, i.e. an angle of 90° ± 30°. To sum up, it can moreover be said that the general shape as seen from the side of the assembly formed by the blade 8, striker 9 and movable contact arm 5 is a shape which resembles that of an H.

When a current flowing in the coil which surrounds the core 10 is lower than a preset threshold value, the electromagnetic striker remains in a rest position as represented in figure 2A, i.e. a condition in which the blade 8 is separated from the electromagnetic body 7 and in which at the same time the movable contact arm 5 is moved towards the electromagnetic body 7 so that the movable contact 4 is in contact with the stationary contact 3. Naturally, as is already known, a flexible means (not represented) is generally provided which

continuously pushes the blade 8 in a direction which moves it away from the end part 26 of the blade 8 of the electromagnetic body 7, i.e. in a direction which moves the face 18 away from the faces 13 and 15 to form said air-gap 19, 20.

If the electrical current exceeds the preset threshold value, the attraction force which is exerted between the blade 8 and the electromagnetic body 7 exceeds the elastic thrust force of the flexible means and this results in the blade 8 moving at high speed towards the electromagnetic body 7 and this pivoting movement causes a movement of the striker 9 whose end 24 comes up against the movable contact arm 5, then pushes this movable contact arm 5 so as to make it pivot to a condition in which the movable contact 4 is separated from the stationary contact 3. The electromagnetic striker is then moved to a tripping condition as represented in figure 2B. In the rest condition represented in figure 2A, it can be seen that a small space is arranged between the end 24 of the striker 9 and the contact zone 27 of the movable contact arm 5.

The fact that the striker 9 is joined to the blade 8 at a central zone of the blade 8 has the consequence of its movement being reduced with respect to the movement of the end zone 24 of the blade 8, by a well-known leverage effect, which results in the thrust force produced at the level of the striker 9 being greater than the attraction force at the level of the end zone 26 of the blade 8 in the same ratio as the leverage ratio. Such an architecture enables a good compromise to be achieved between the speed of movement of the movable contact 4 when the tripping action takes place, and the driving force of the striker 9.

CLAIMS

1. An electromagnetic actuator for a low voltage circuit breaker comprising,
an electromagnetic body (7) including a core (10) surrounded by an excitation coil and two parallel flanks (11, 12) conducting the magnetic flux and each presenting opposite first (13, 15) and second (14, 16) ends ;
a blade (8) pivotally mounted around an articulation (21) and able to occupy a rest position in which it is separated from said first ends of the two flanks and an actuation position in which it is magnetically attracted into contact with said first ends of the two flanks ;
a stationary contact (3) situated in or near to an air-gap formed between said second ends (14, 16) of the two flanks (11, 12) ;
a movable contact support arm (5) pivotally mounted around an articulation (22) so as to move in the air-gap moving the movable contact (4) joined thereto between said rest position in which the movable contact (4) is in contact with the stationary contact (3) and said actuation position in which the movable contact is separated from the stationary contact ;
and a striker (9) formed by an elongated part interposed between the blade (8) and the movable contact support arm (5),
characterized in that the articulation (21) of the blade (8) and the articulation (22) of the movable contact support arm (5) are located on one and the same side with respect to the electromagnetic body (7) and that the striker (9) is joined to the blade (8) at a connecting point (23) situated in an intermediate zone between the articulation (21) of the blade (8) and an opposite end zone (26) of the blade (8) at the level of which it is magnetically attractable towards said first ends (13, 15) of the two flanks.

2. The electromagnetic actuator for a low voltage circuit breaker according to claim 1, characterized in that the

striker (9) is arranged in such a way that its longitudinal direction makes an angle of 90° ± 30° with the longitudinal direction of the blade (8) and also makes an angle of 90° ± 30° with the longitudinal direction of the movable contact arm (5).

3. The actuator according to claim 2, characterized in that the rotation axes of the blade (8) and movable contact (5) are located appreciably on the same perpendicular with respect to their respective planes.

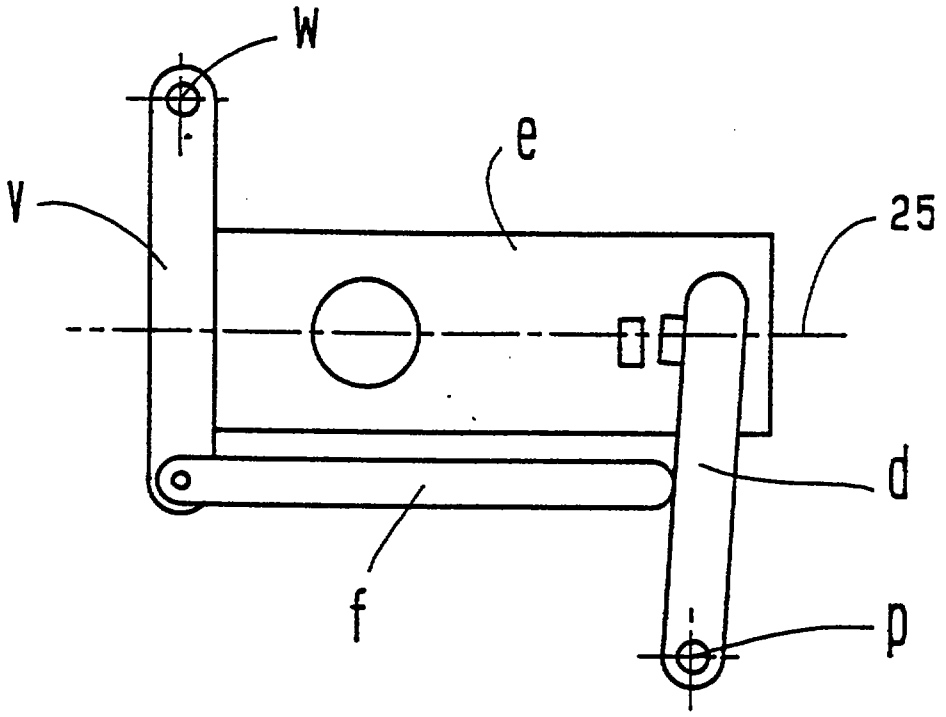

Fig. 1A

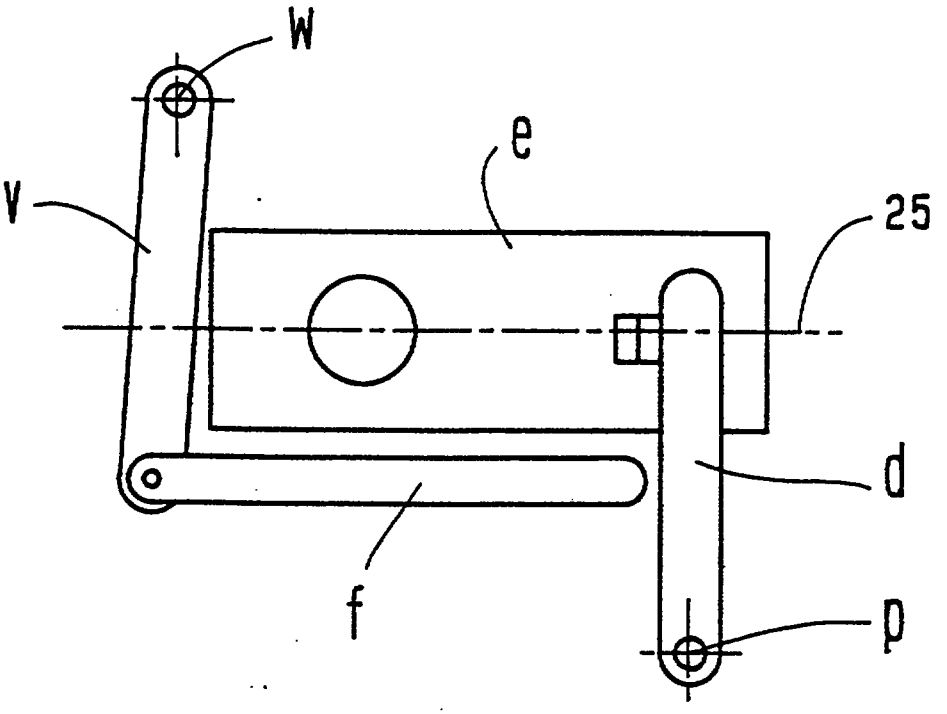

Fig. 1B

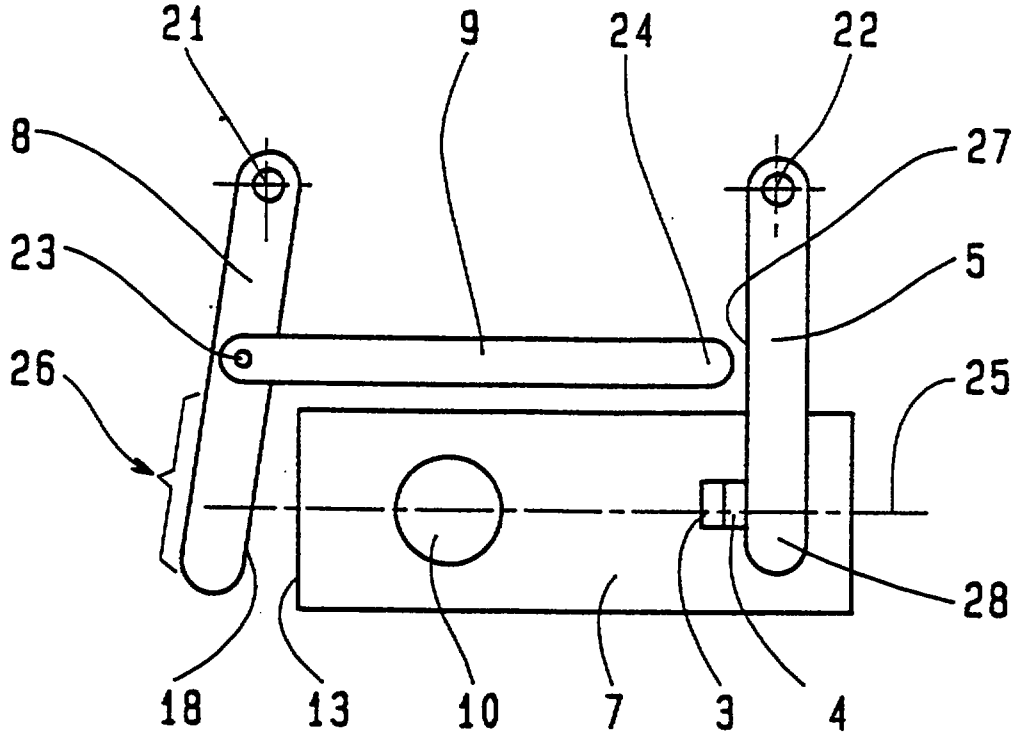
21
9
24
22
8
27
23
5
26
25
28
18
13
10
7
3
4

Fig. 2A

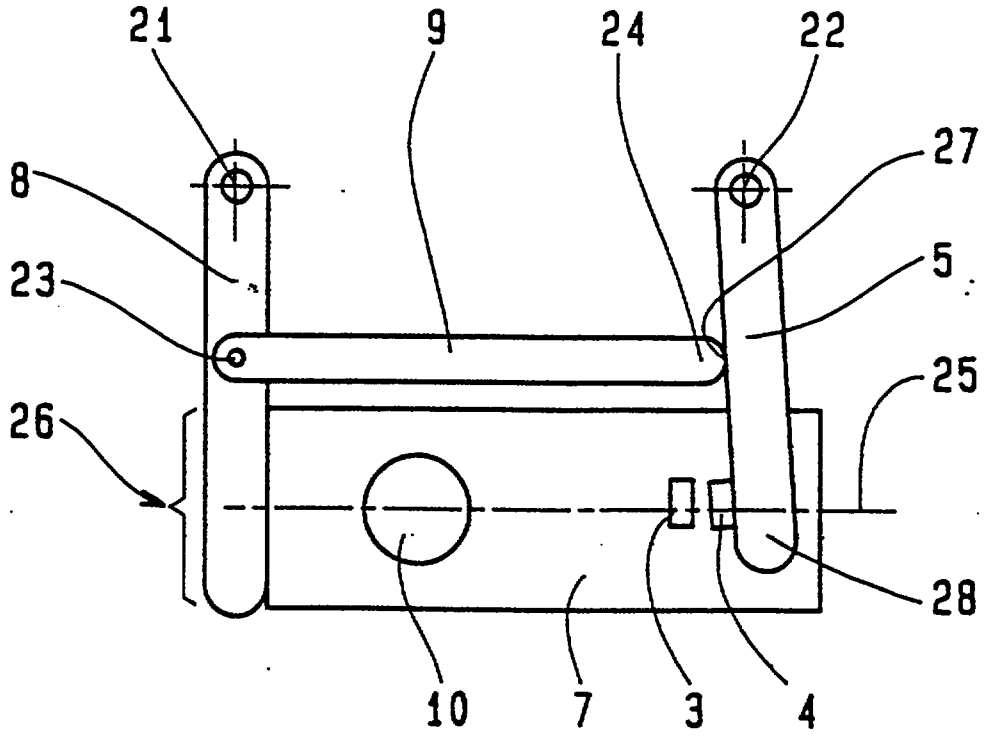
21
9
24
22
8
27
23
5
26
25
28
10
7
3
4

Fig. 2B

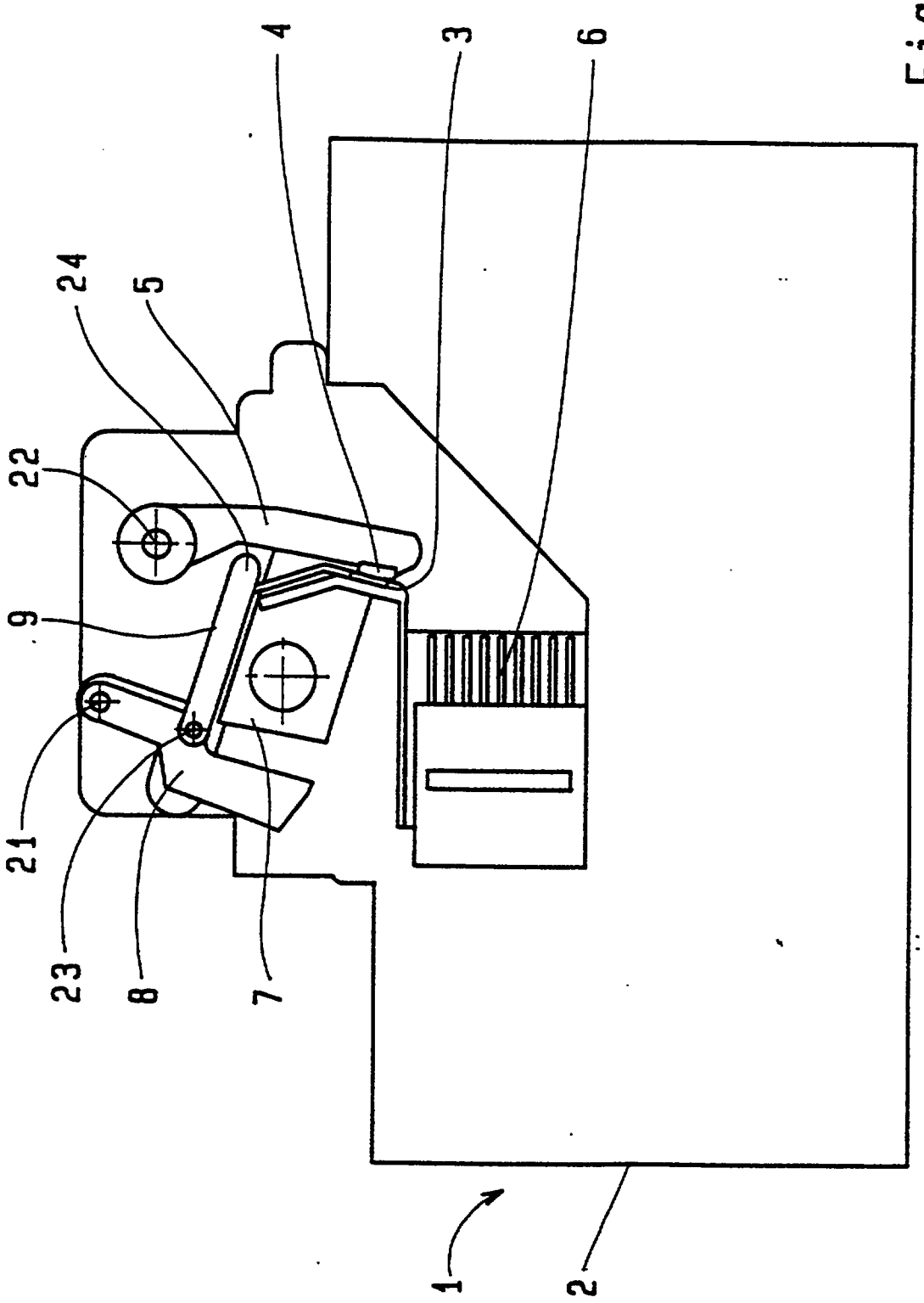

Fig. 3

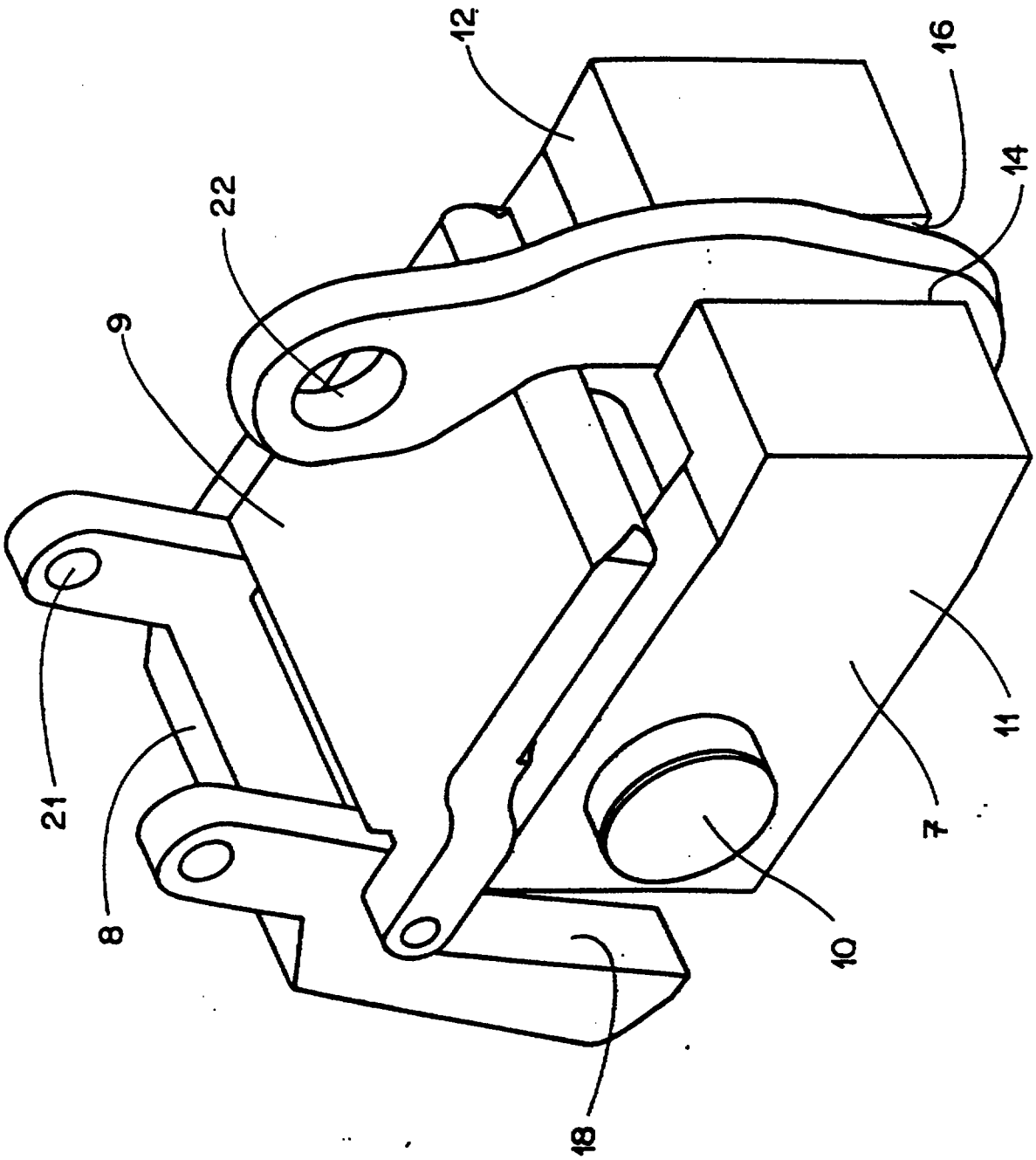

Fig. 4

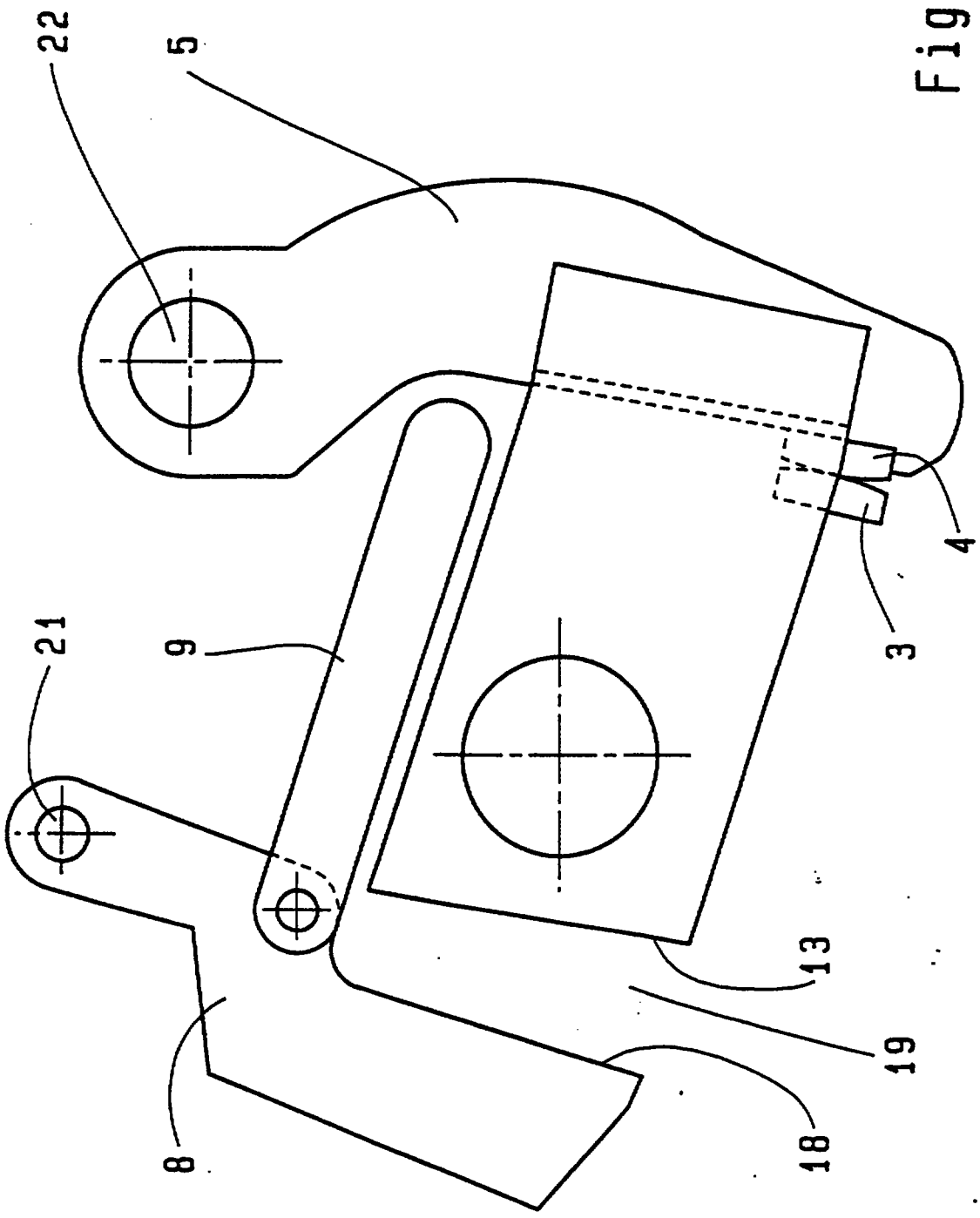

Fig. 5

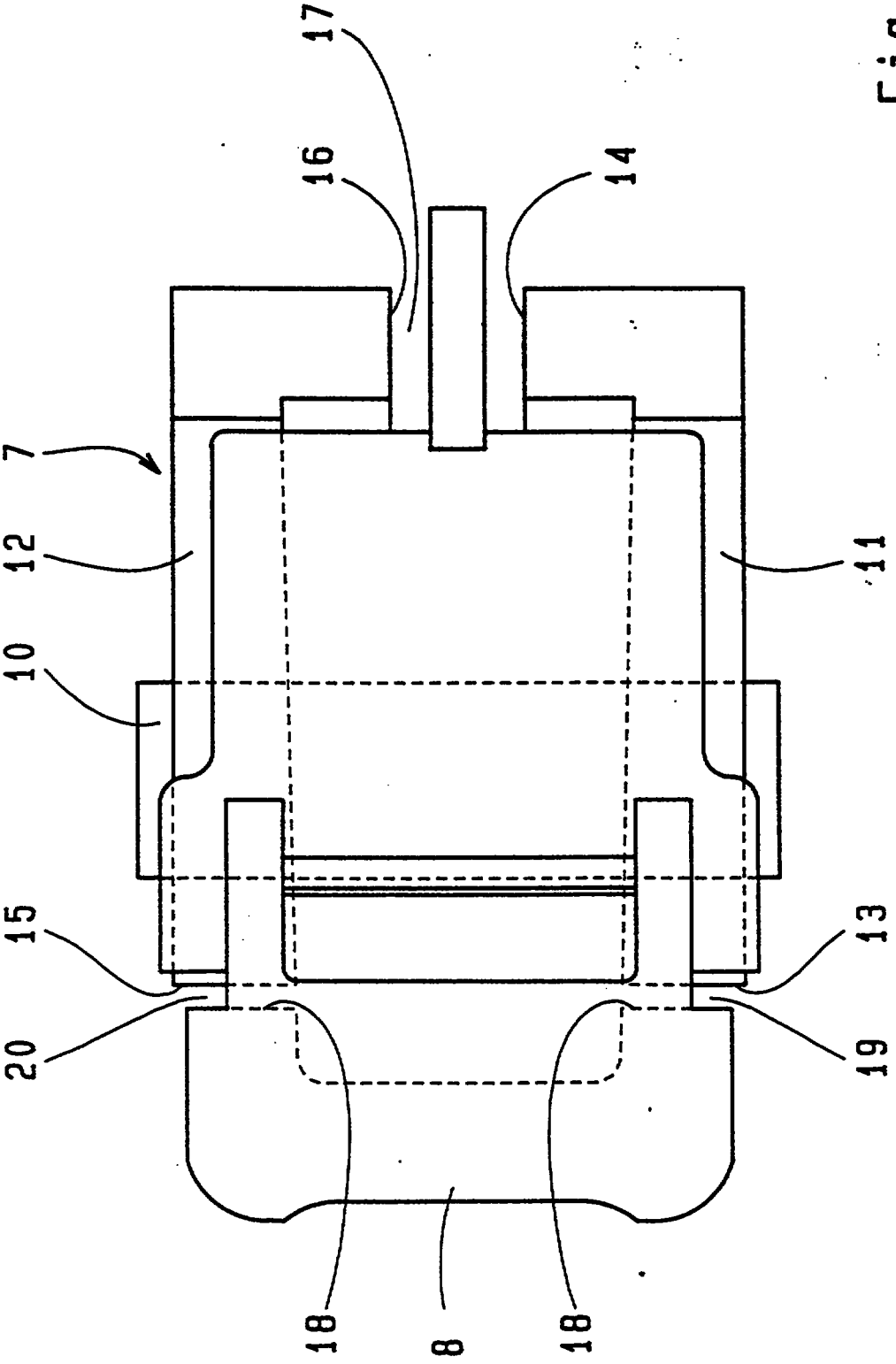

Fig. 6

ABSTRACT

AN ELECTROMAGNETIC ACTUATOR FOR A LOW VOLTAGE CIRCUIT BREAKER

An electromagnetic actuator for a low voltage circuit breaker, comprising : an electromagnetic body (7), a blade (8) pivotally mounted around an articulation (21), a stationary contact (3), a movable contact support arm (5) pivotally mounted around an articulation (22), and a striker (9) formed by an elongated part interposed between the blade (8) and the movable contact support arm (5). The articulation (21) of the blade (8) and the articulation (22) of the movable contact support arm (5) are located on one and the same side with respect to the electromagnetic body (7) and the striker (9) is joined to the blade (8) at an intermediate point between the articulation (21) of the blade (8) and an end zone (26) of the blade (8) at the level of which it is magnetically attractable towards the electromagnetic body (7).

(figure 3)