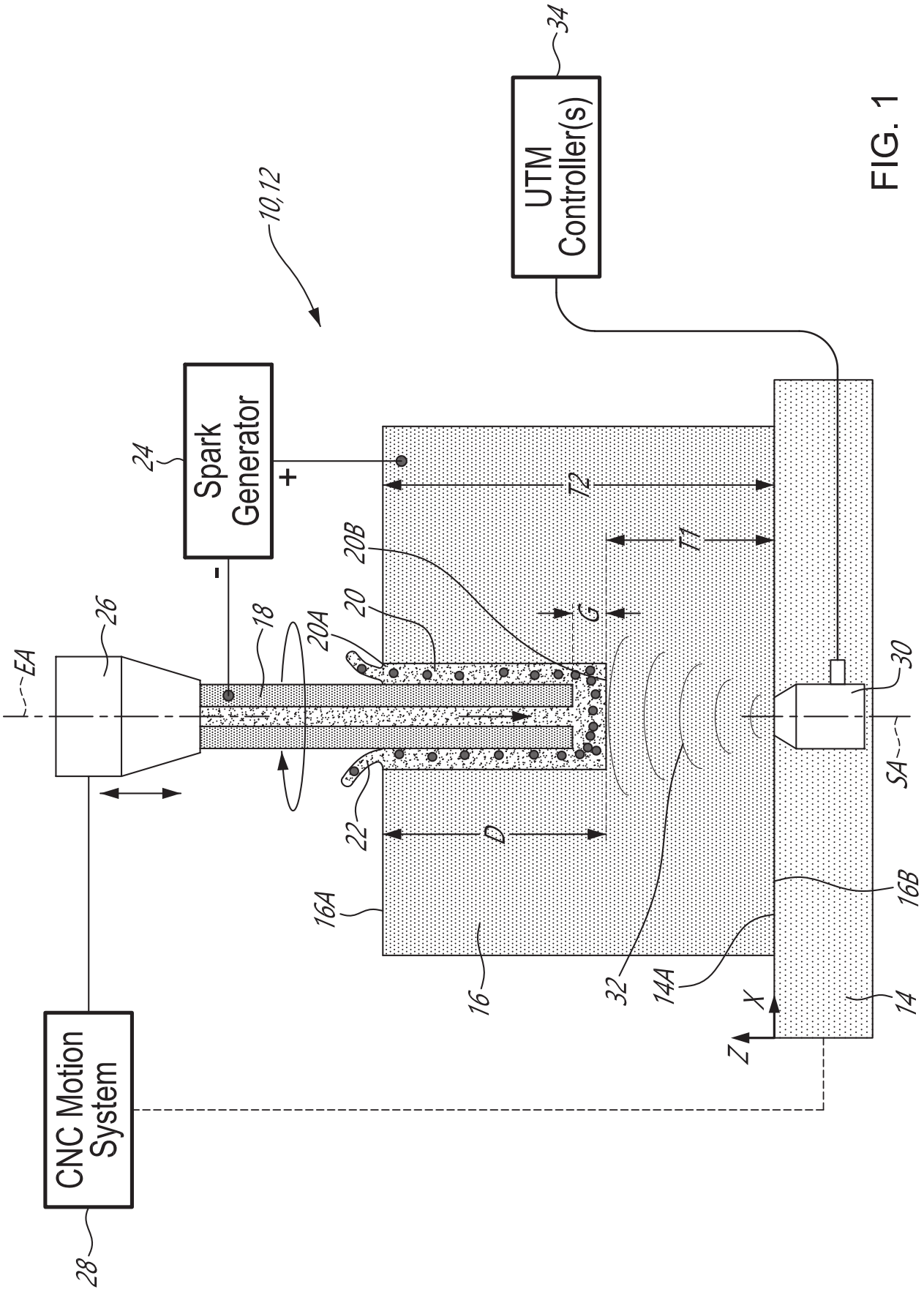
UTM Controller(s)
34
10,12
Spark Generator
24
+
-
CNC Motion System
28
26
18
20A
20
20B
EA
T2
T1
G
D
22
16A
16
32
14A
16B
14
30
SA
X
Z

FIG. 1

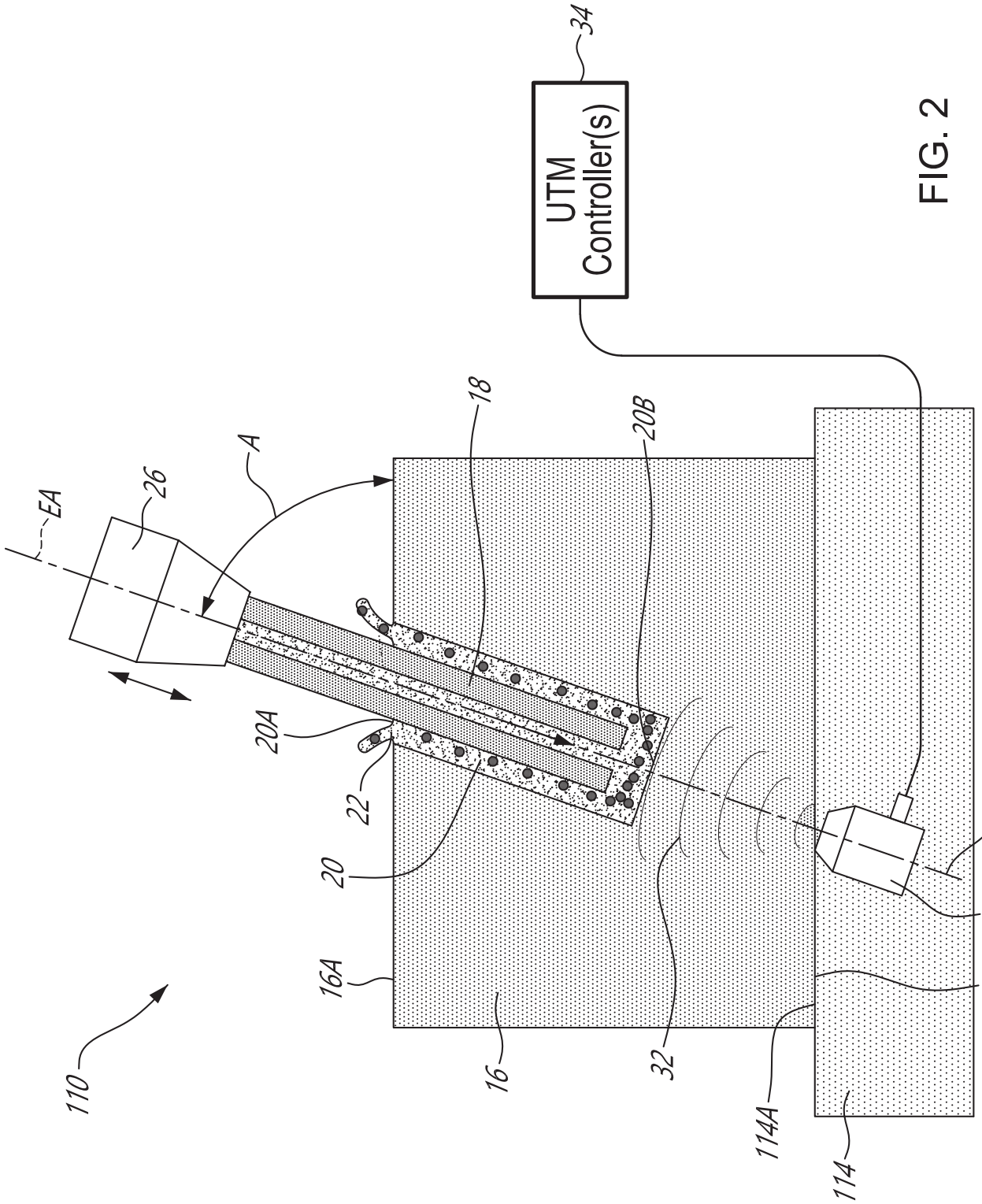
UTM Controller(s)
34
EA
26
A
18
20B
20A
22
20
16A
16
110
32
114A
114
16B
130
SA

FIG. 2

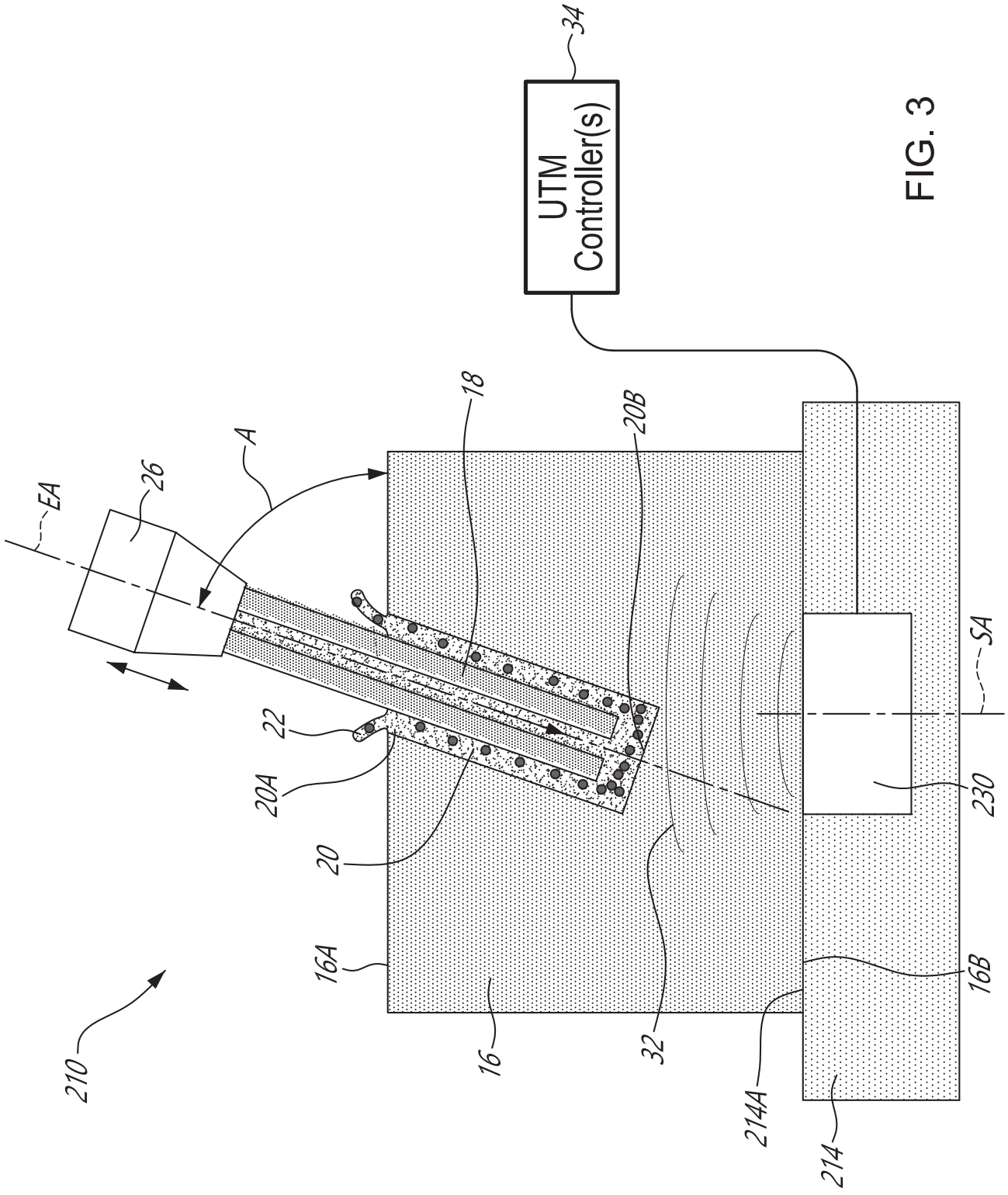
UTM Controller(s)
34
EA
26
A
18
20B
22
20A
20
16A
16
32
214A
214
16B
230
SA
210

FIG. 3

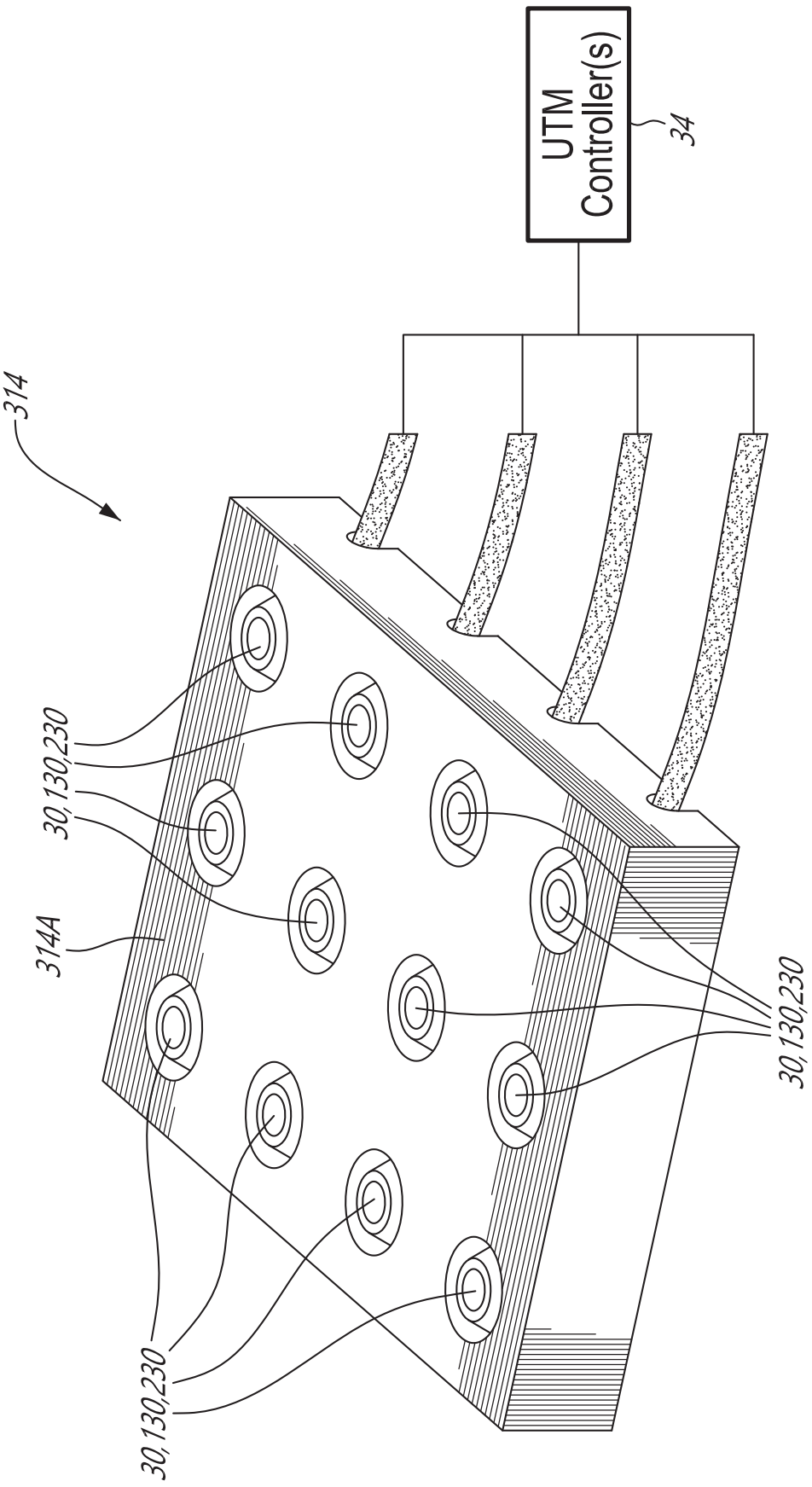

FIG. 4

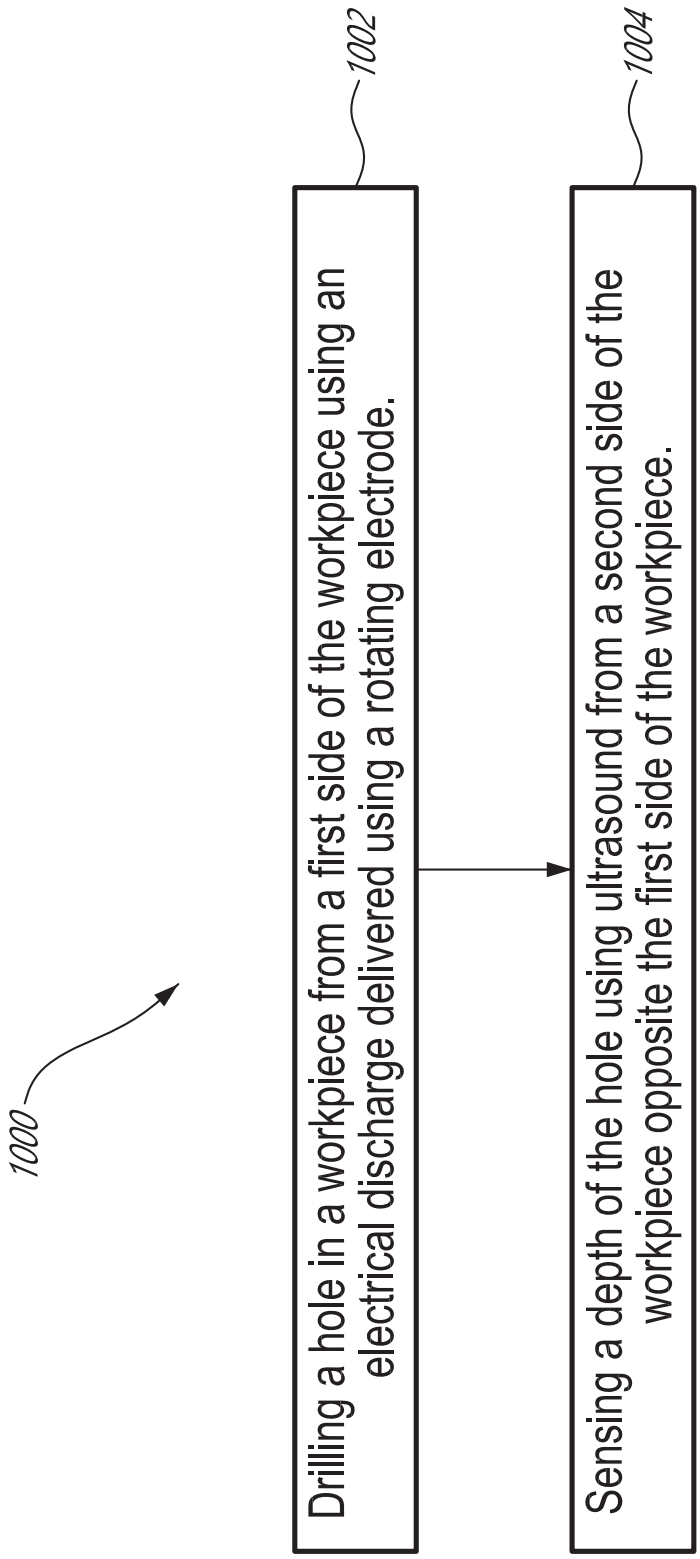
1000
1002
Drilling a hole in a workpiece from a first side of the workpiece using an electrical discharge delivered using a rotating electrode.
1004
Sensing a depth of the hole using ultrasound from a second side of the workpiece opposite the first side of the workpiece.

FIG. 5

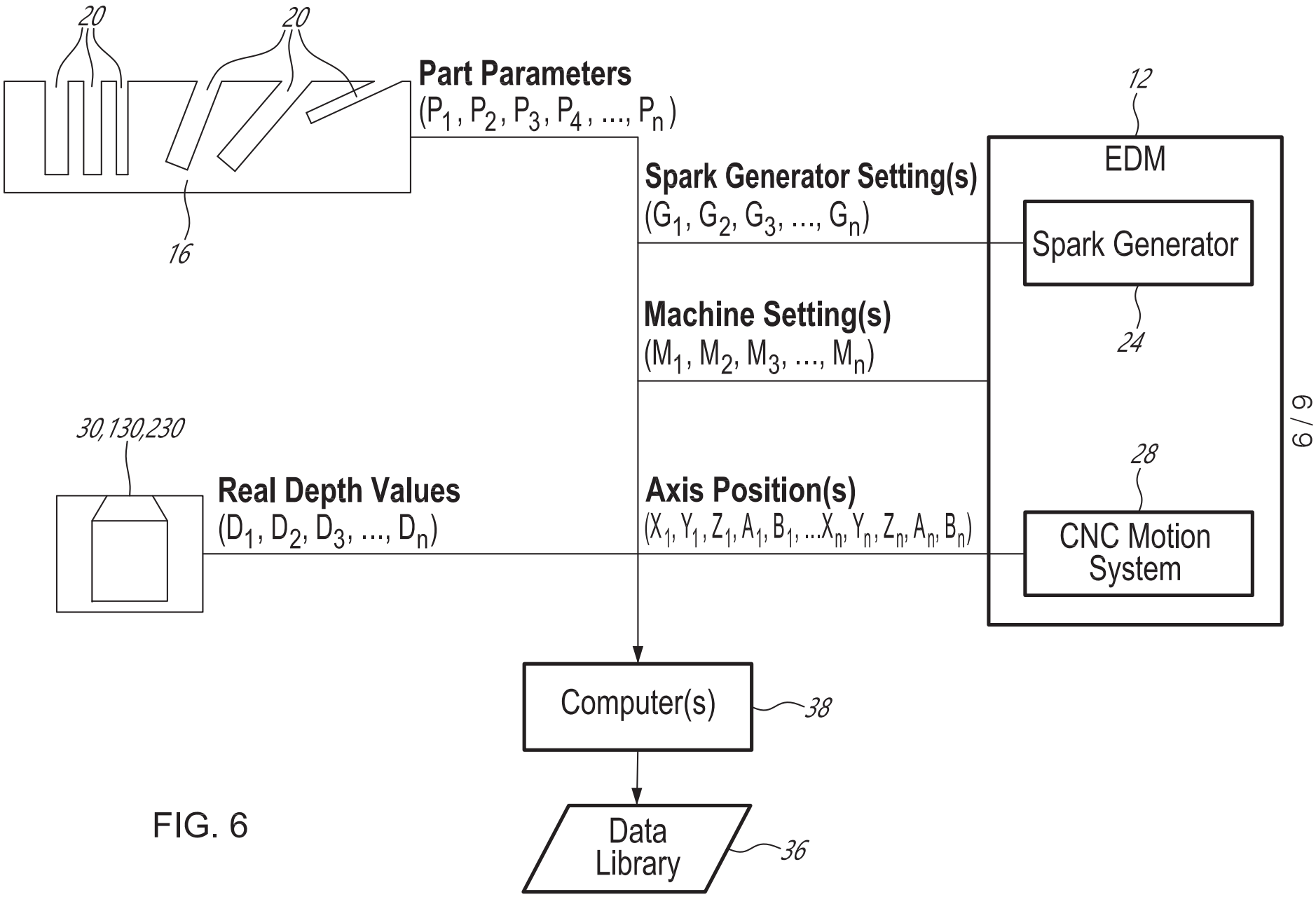
20
20
16
Part Parameters
$(P_1, P_2, P_3, P_4, ..., P_n)$
12
EDM
Spark Generator Setting(s)
$(G_1, G_2, G_3, ..., G_n)$
Spark Generator
24
Machine Setting(s)
$(M_1, M_2, M_3, ..., M_n)$
30,130,230
Real Depth Values
$(D_1, D_2, D_3, ..., D_n)$
28
Axis Position(s)
$(X_1, Y_1, Z_1, A_1, B_1, ...X_n, Y_n, Z_n, A_n, B_n)$
CNC Motion System
Computer(s)
38
Data Library
36

FIG. 6



Test Hole ID	Part Parameters		Time (sec)	Real Depth Values (mm)	Spark Generator Settings	Machine Settings	Axis Positions
	Material	Hole Diameter					
1	MAT1	Ø1	T1	D1	G1	M1	X1, Y1, Z1
1	MAT1	Ø1	T2	D2	G2	M2	X2, Y2, Z2
1	MAT1	Ø1	T3	D3	G3	M3	X3, Y3, Z3
...	...	...	...	...	...	...	...
2	MAT2	Ø2	T4	D4	G4	M4	X4, Y4, Z4
2	MAT2	Ø2	T5	D5	G5	M5	X5, Y5, Z5
2	MAT2	Ø2	T6	D6	G6	M6	X6, Y6, Z6
...	...	...	...	...	...	...	...

FIG. 7

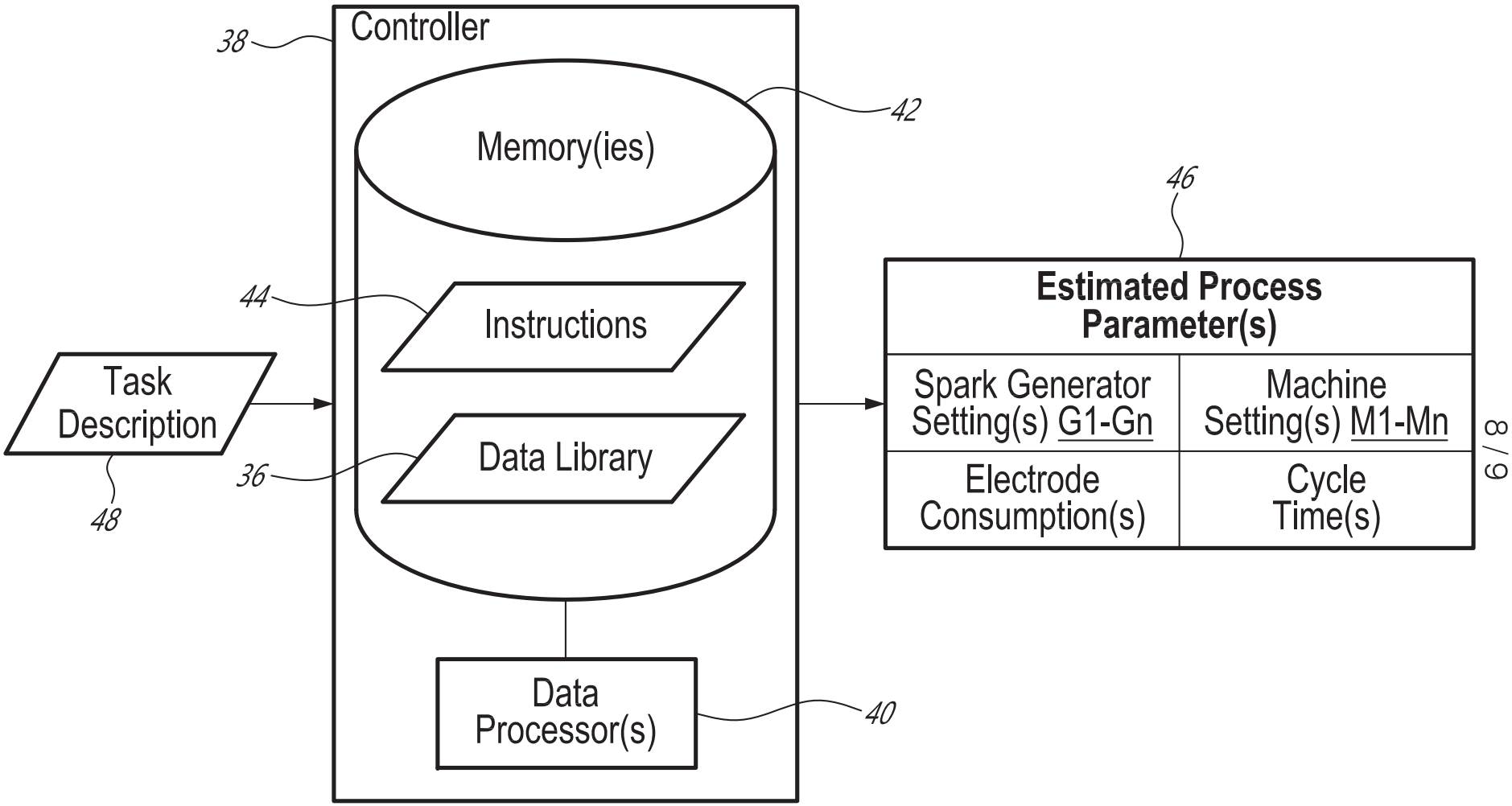
38
Controller
Memory(ies)
42
46
44
Instructions
Task Description
Data Library
36
48
Data Processor(s)
40
Estimated Process Parameter(s)
Spark Generator Setting(s) G1-Gn
Machine Setting(s) M1-Mn
Electrode Consumption(s)
Cycle Time(s)

FIG. 8

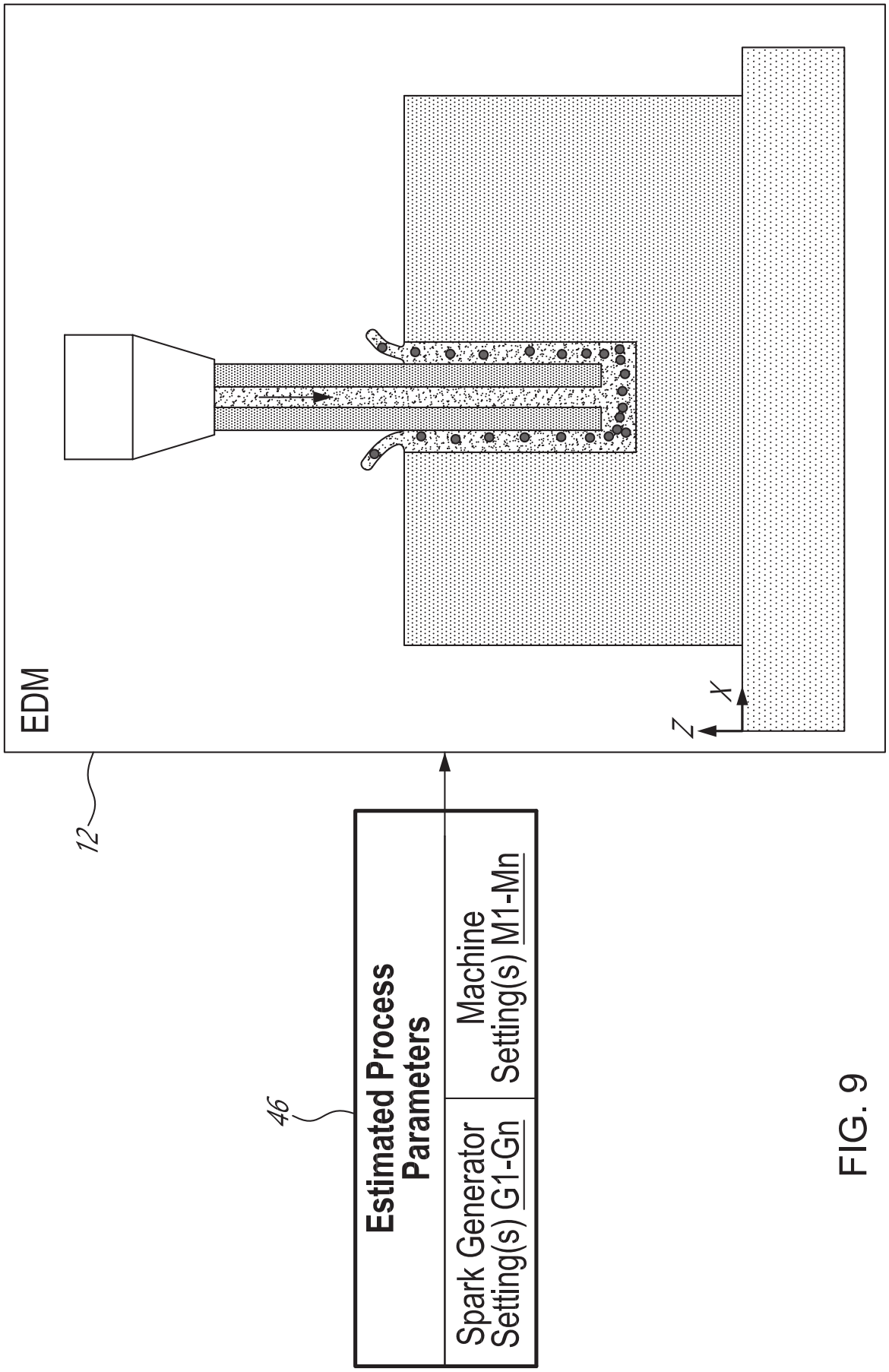
EDM
Z
X
12
46
Estimated Process Parameters
Spark Generator Setting(s) G1-Gn
Machine Setting(s) M1-Mn

FIG. 9