(12) INTERNATIONAL APPLICATION PUBLISHED UNDER THE PATENT COOPERATION TREATY (PCT)

(19) World Intellectual Property Organization
International Bureau

(43) International Publication Date
14 June 2012 (14.06.2012)

WIPO | PCT

(10) International Publication Number
WO 2012/078141 A1

(51) International Patent Classification:
F23D 14/62 (2006.01) *F23D 14/02* (2006.01)

(21) International Application Number:
PCT/US2010/059285

(22) International Filing Date:
7 December 2010 (07.12.2010)

(25) Filing Language: English

(26) Publication Language: English

(71) Applicant *(for all designated States except US)*: **PERKINELMER HEALTH SCIENCES, INC.** [US/US]; 940 Winter Street, Waltham, Massachusetts 02451 (US).

(72) Inventor; and
(75) Inventor/Applicant *(for US only)*: **JIN, Feng** [US/US]; 60 Robert Dennis Drive, Milford, Connecticut 06461 (US).

(74) Agents: **KLASSEN, Karl, L.** et al.; Seed Intellectual Property Law Group PLLC, Suite 5400, 701 Fifth Avenue, Seattle, Washington 98104-7064 (US).

(81) Designated States *(unless otherwise indicated, for every kind of national protection available)*: AE, AG, AL, AM, AO, AT, AU, AZ, BA, BB, BG, BH, BR, BW, BY, BZ, CA, CH, CL, CN, CO, CR, CU, CZ, DE, DK, DM, DO, DZ, EC, EE, EG, ES, FI, GB, GD, GE, GH, GM, GT, HN, HR, HU, ID, IL, IN, IS, JP, KE, KG, KM, KN, KP, KR, KZ, LA, LC, LK, LR, LS, LT, LU, LY, MA, MD, ME, MG, MK, MN, MW, MX, MY, MZ, NA, NG, NI, NO, NZ, OM, PE, PG, PH, PL, PT, RO, RS, RU, SC, SD, SE, SG, SK, SL, SM, ST, SV, SY, TH, TJ, TM, TN, TR, TT, TZ, UA, UG, US, UZ, VC, VN, ZA, ZM, ZW.

(84) Designated States *(unless otherwise indicated, for every kind of regional protection available)*: ARIPO (BW, GH, GM, KE, LR, LS, MW, MZ, NA, SD, SL, SZ, TZ, UG, ZM, ZW), Eurasian (AM, AZ, BY, KG, KZ, MD, RU, TJ, TM), European (AL, AT, BE, BG, CH, CY, CZ, DE, DK, EE, ES, FI, FR, GB, GR, HR, HU, IE, IS, IT, LT, LU, LV, MC, MK, MT, NL, NO, PL, PT, RO, RS, SE, SI, SK, SM, TR), OAPI (BF, BJ, CF, CG, CI, CM, GA, GN, GQ, GW, ML, MR, NE, SN, TD, TG).

Published:

— *with international search report (Art. 21(3))*

— *before the expiration of the time limit for amending the claims and to be republished in the event of receipt of amendments (Rule 48.2(h))*

(54) Title: ATOMIC ABSORPTION INSTRUMENT

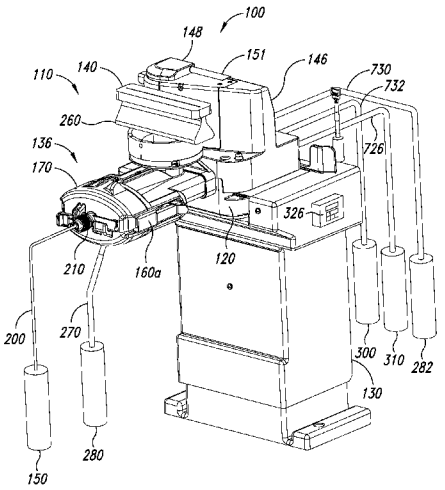

FIG. 1

(57) Abstract: An atomic absorption instrument has a burner and a mixing apparatus for delivering a combustible mixture to the burner. The mixing apparatus includes a mixing chamber assembly having a plurality of internal delivery passageways. An end cap assembly holds a nebulizer closes a mixing chamber. The end cap assembly has a plurality of internal feed passageways through which fluid from the internal delivery passageways flows into the mixing chamber. Latch mechanisms couple the end cap assembly to the mixing chamber assembly. The latch mechanisms can be operated to remove the end cap assembly.

WO 2012/078141 A1