FIG. 1

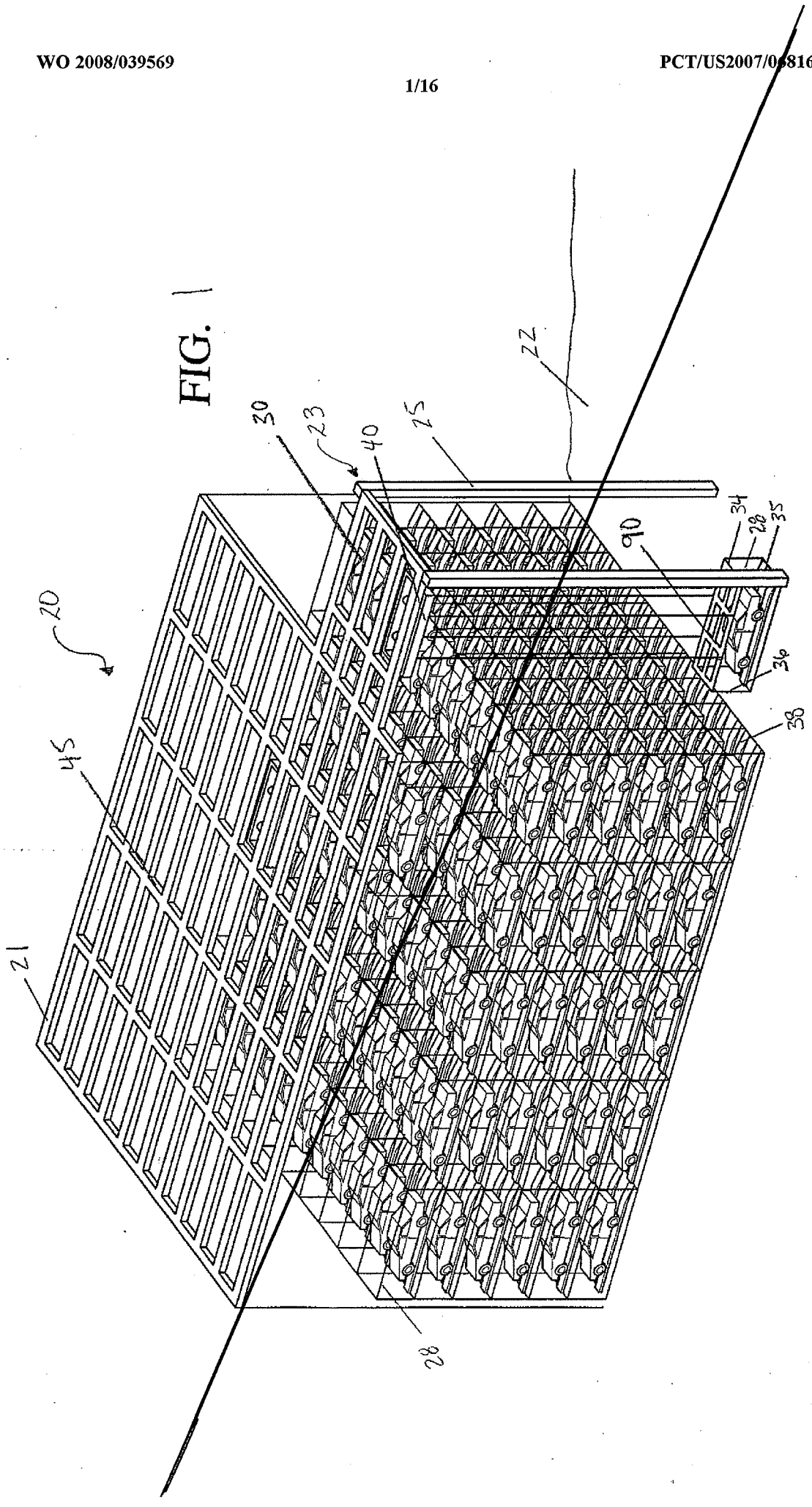

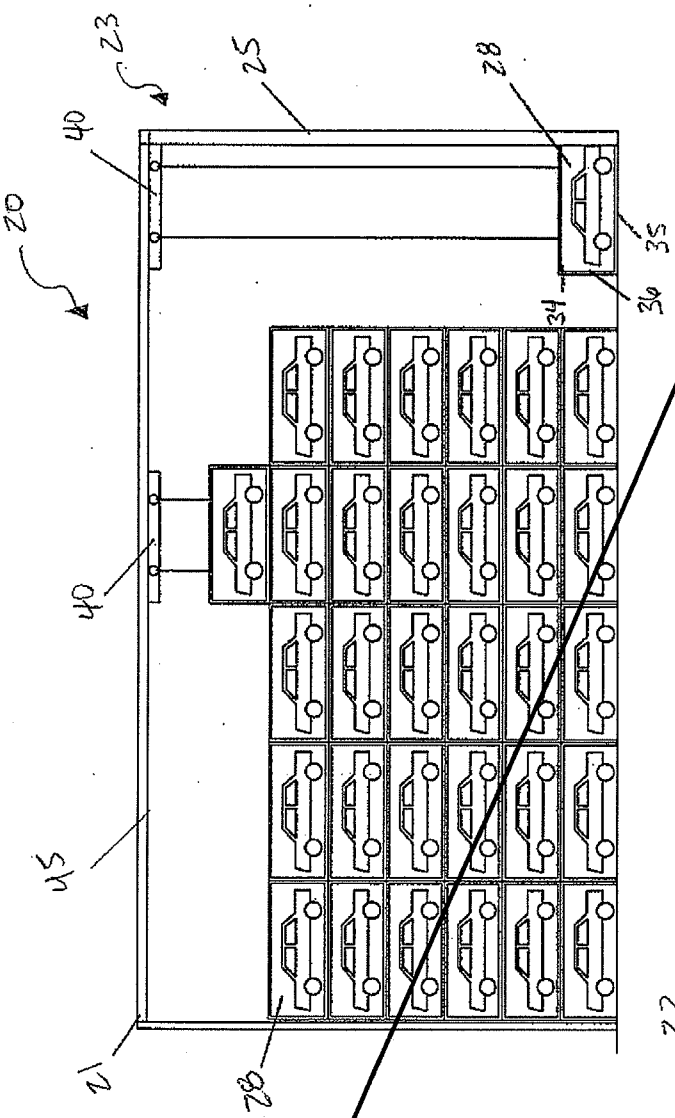

FIG. 2

FIG. 3

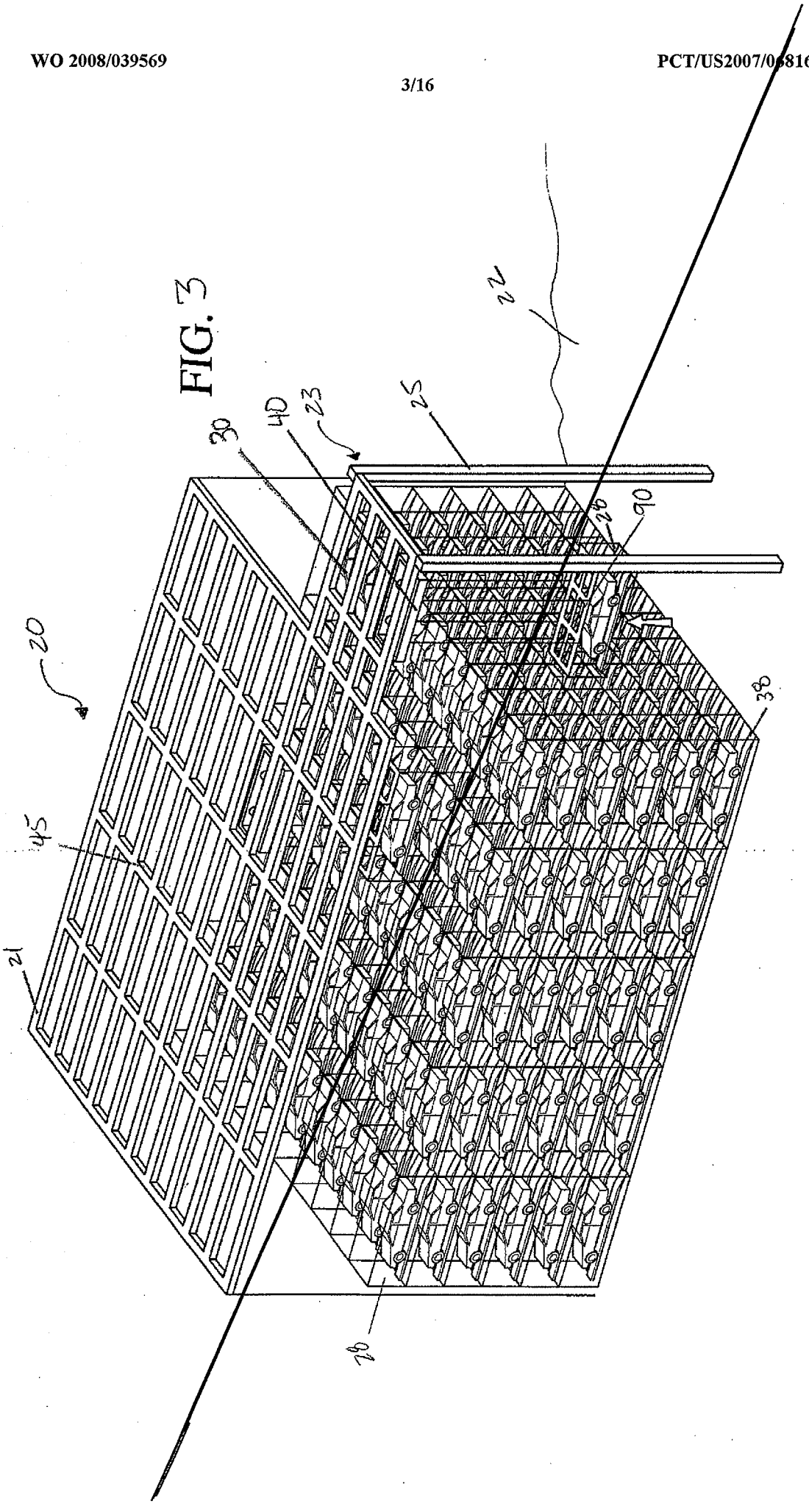

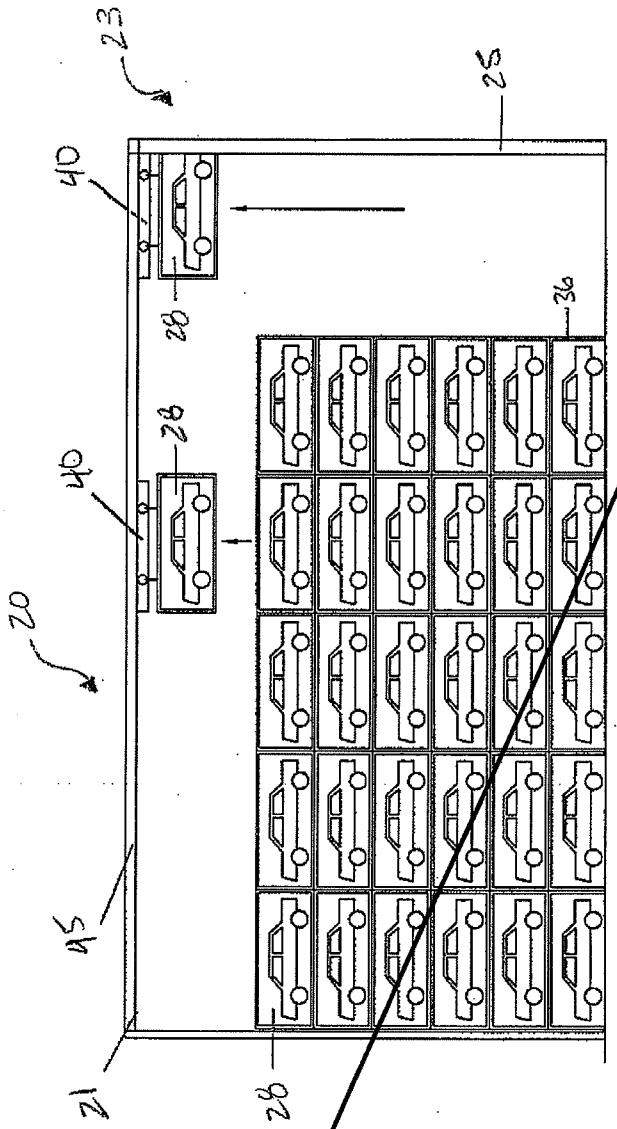

FIG. 4

FIG. 5

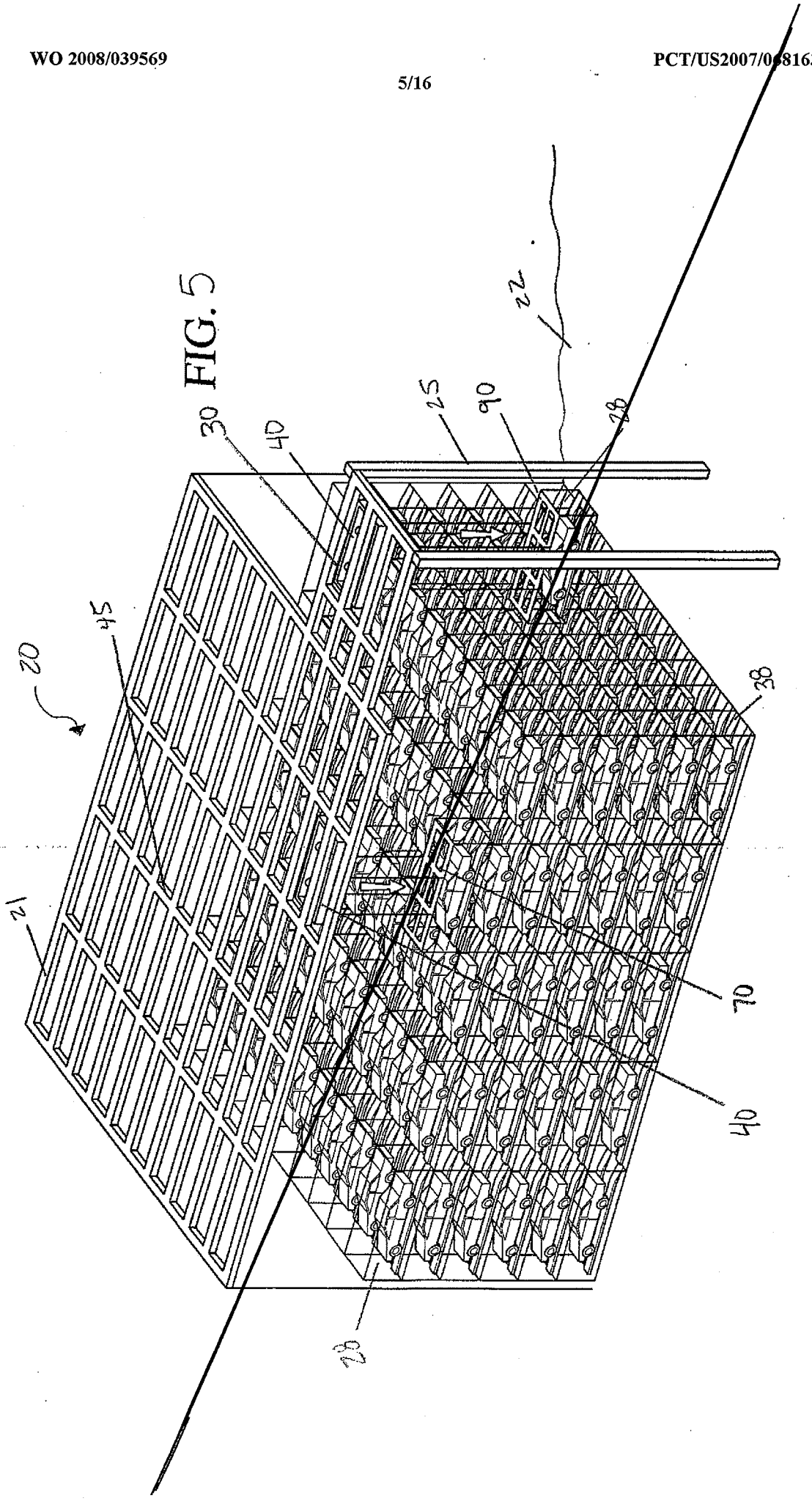

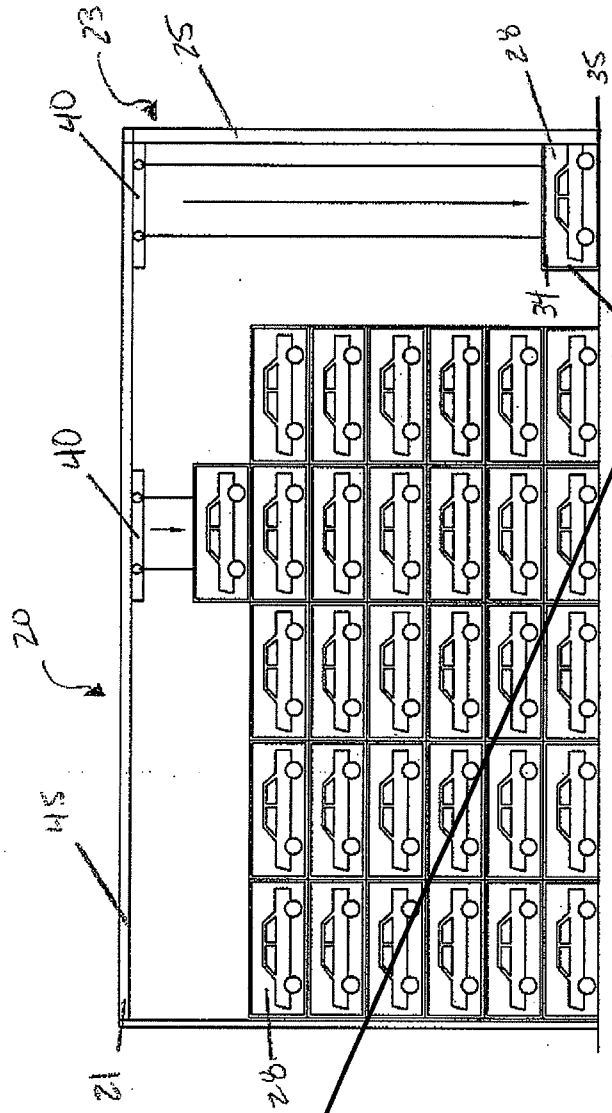

FIG. 6

Carriage Mates With Car Cell

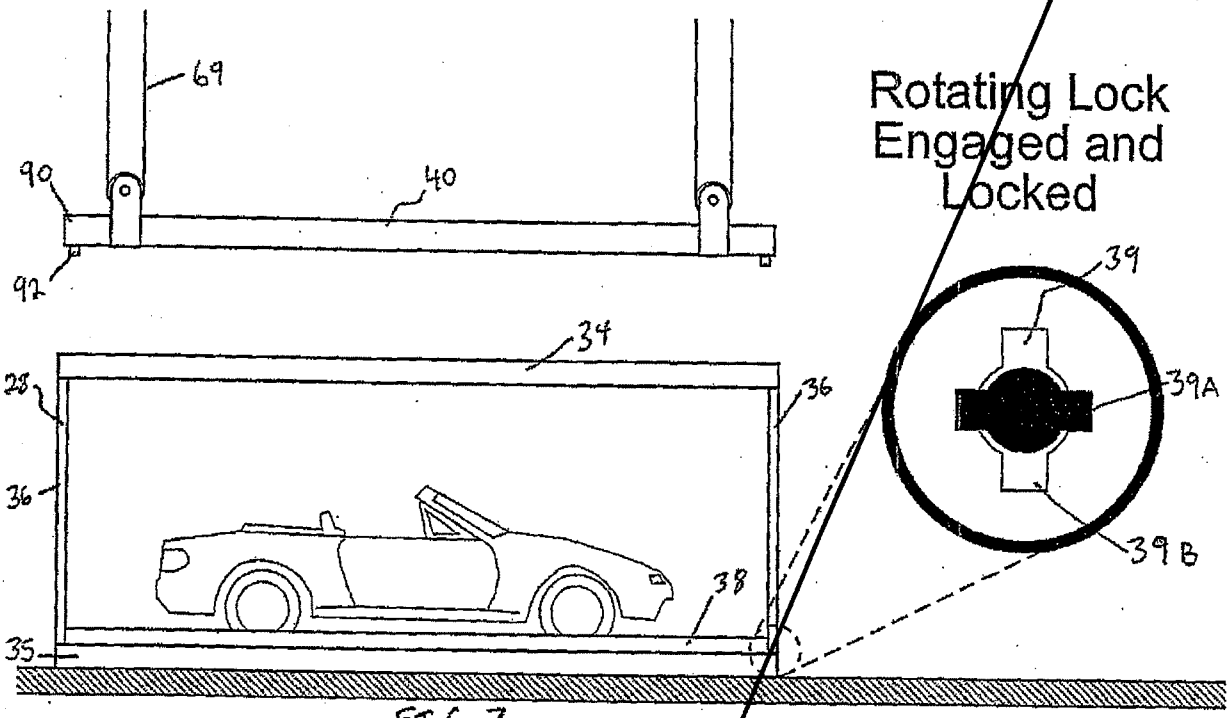

FIG. 7

FIG. 8

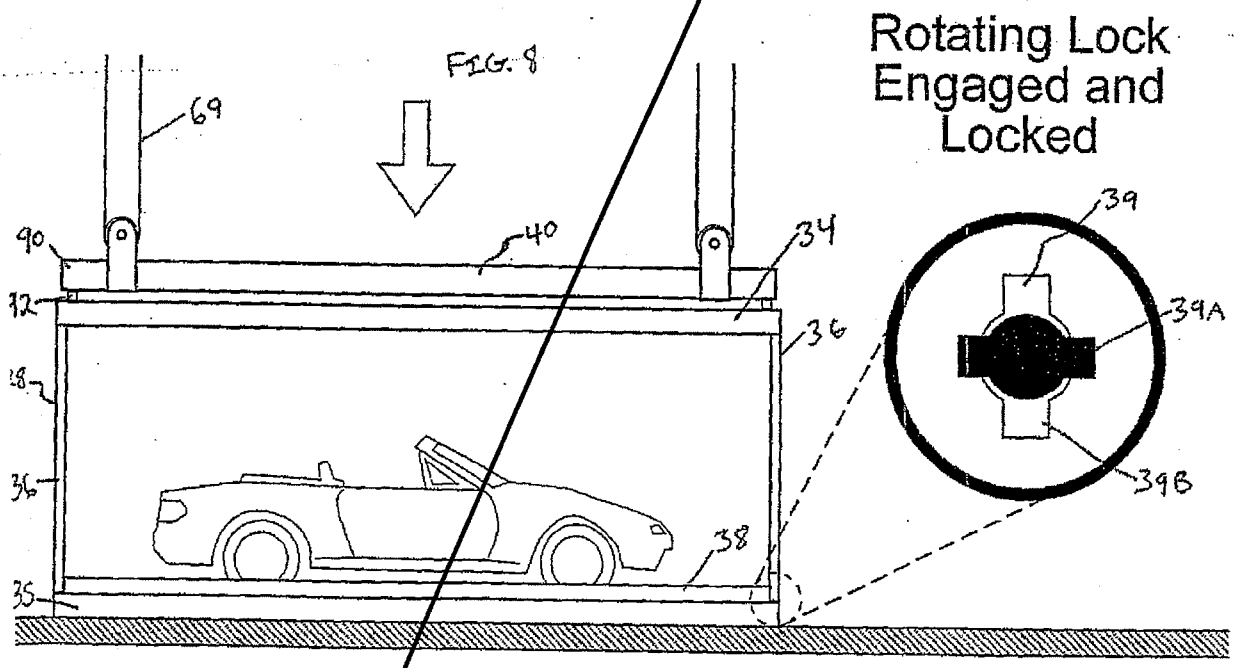

Carriage Removes Entire Car Cell

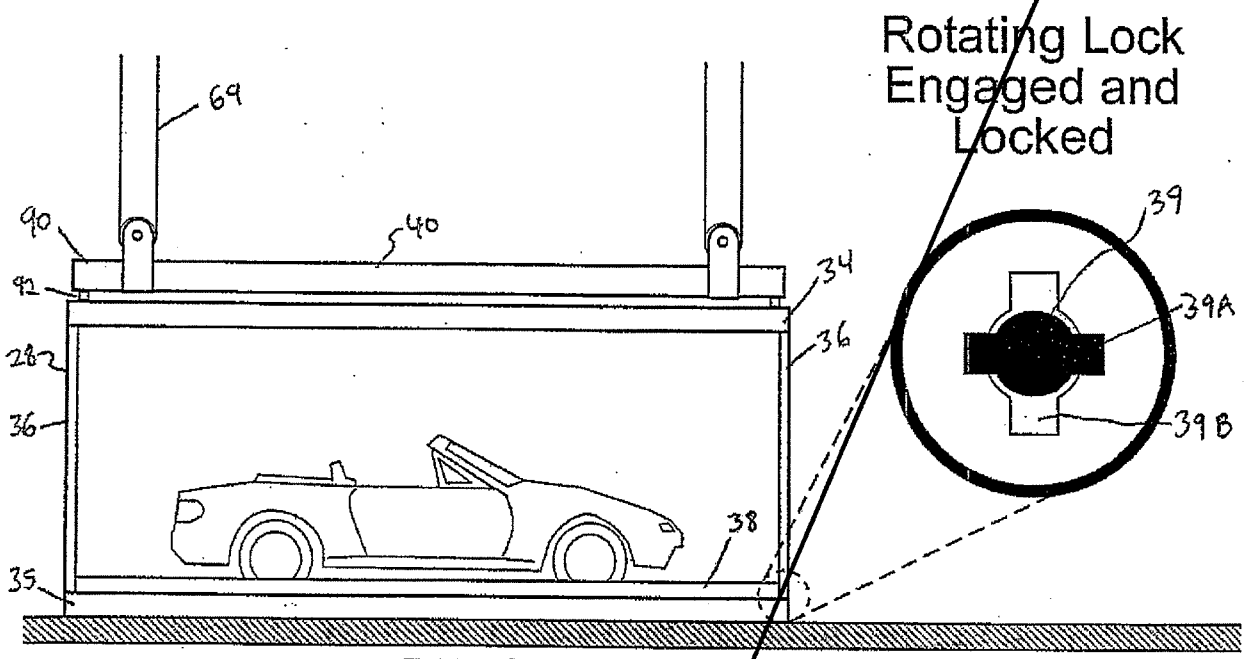

FIG. 9

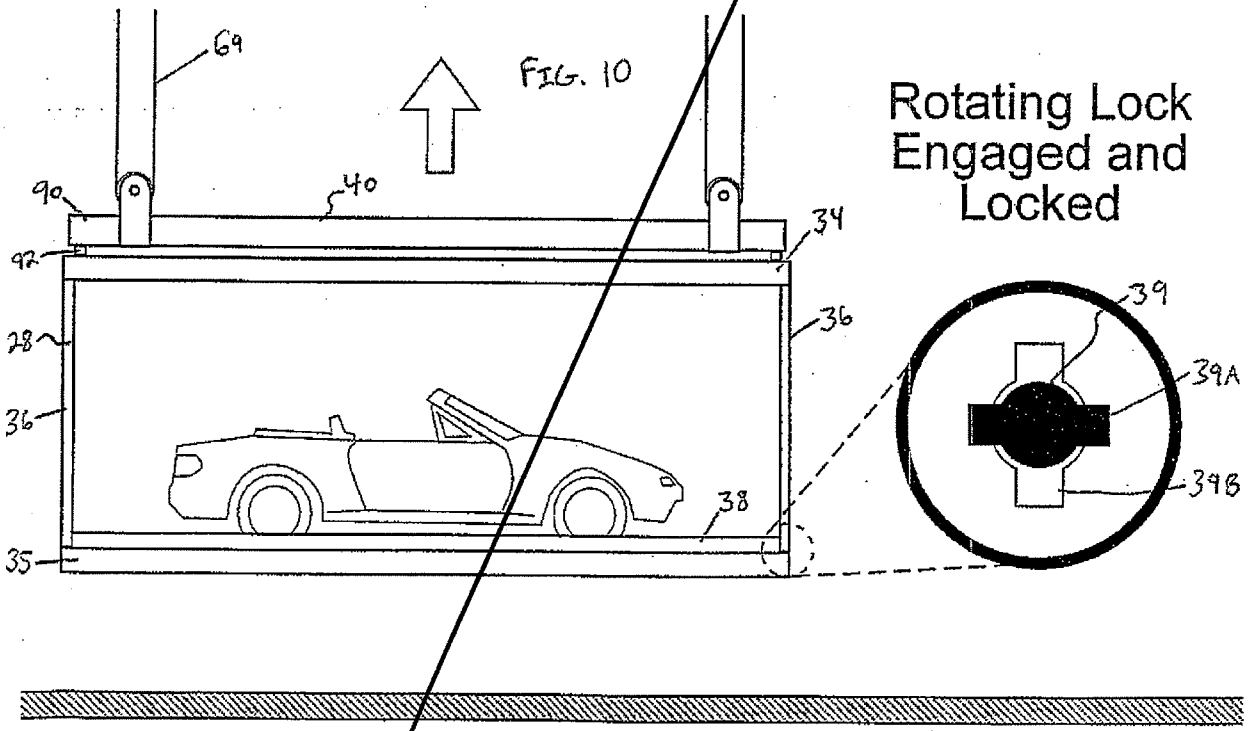

FIG. 10

Carriage Removes Upper Portion of Car Cell

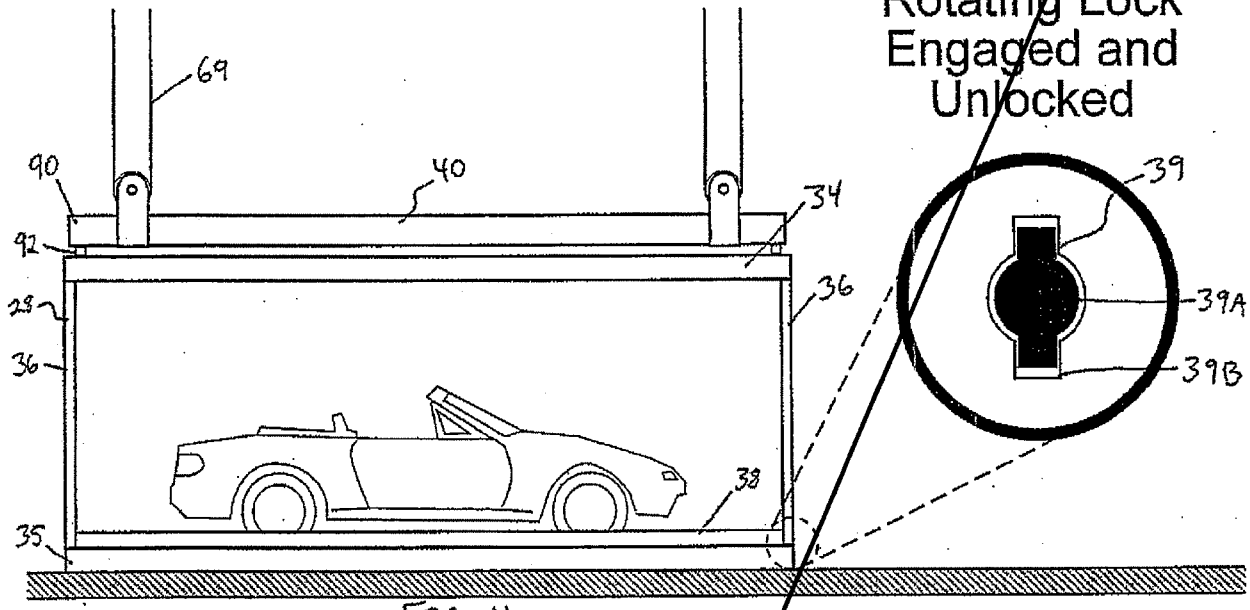

FIG. 11

FIG. 12

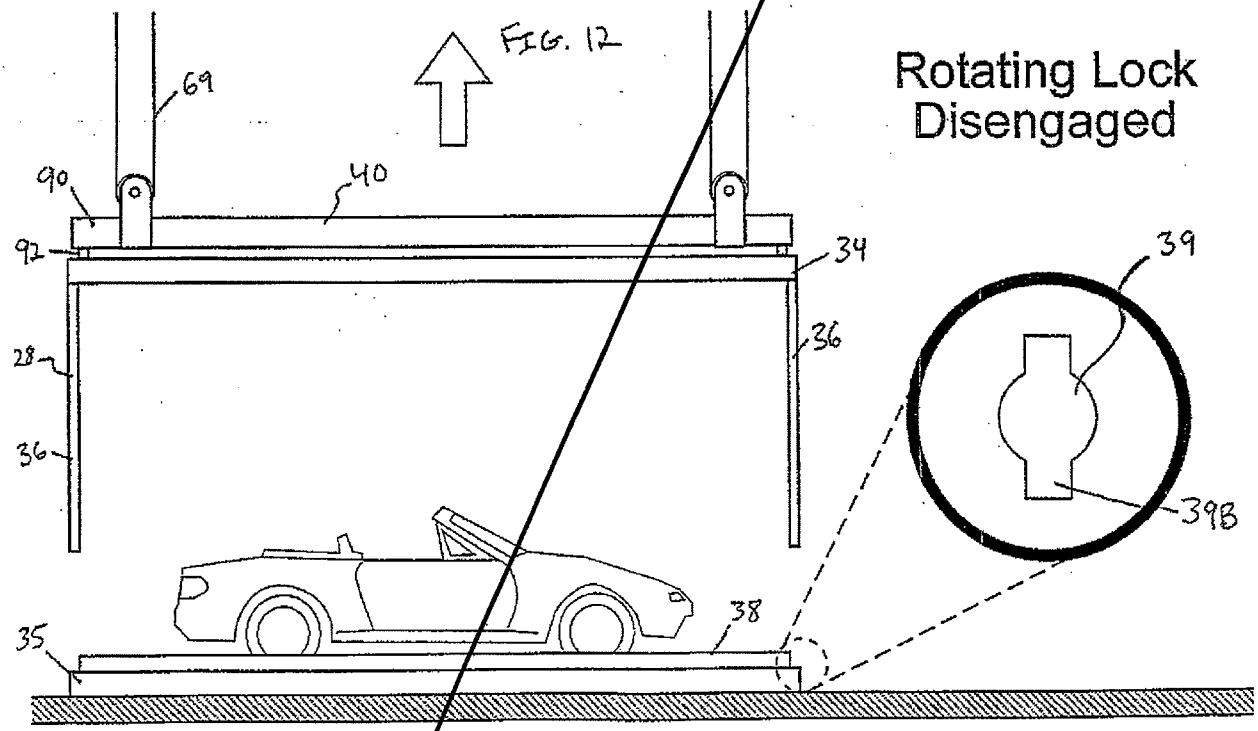

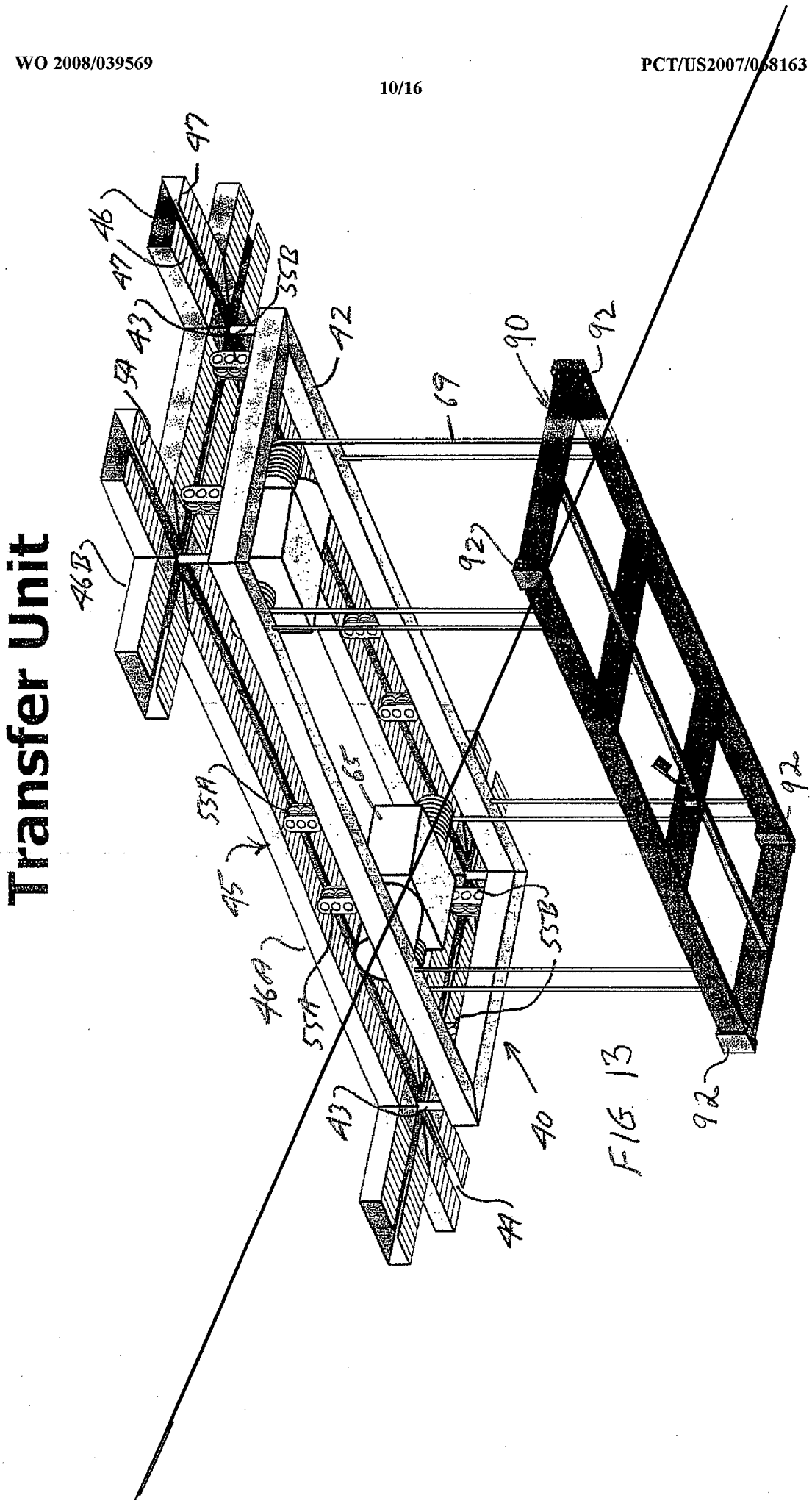
Transfer Unit
47
46
47
55B
43
54
12
19
90
92
46B
92
55A
65
45
55B
46A
55A
43
41
40
92
92

FIG. 13

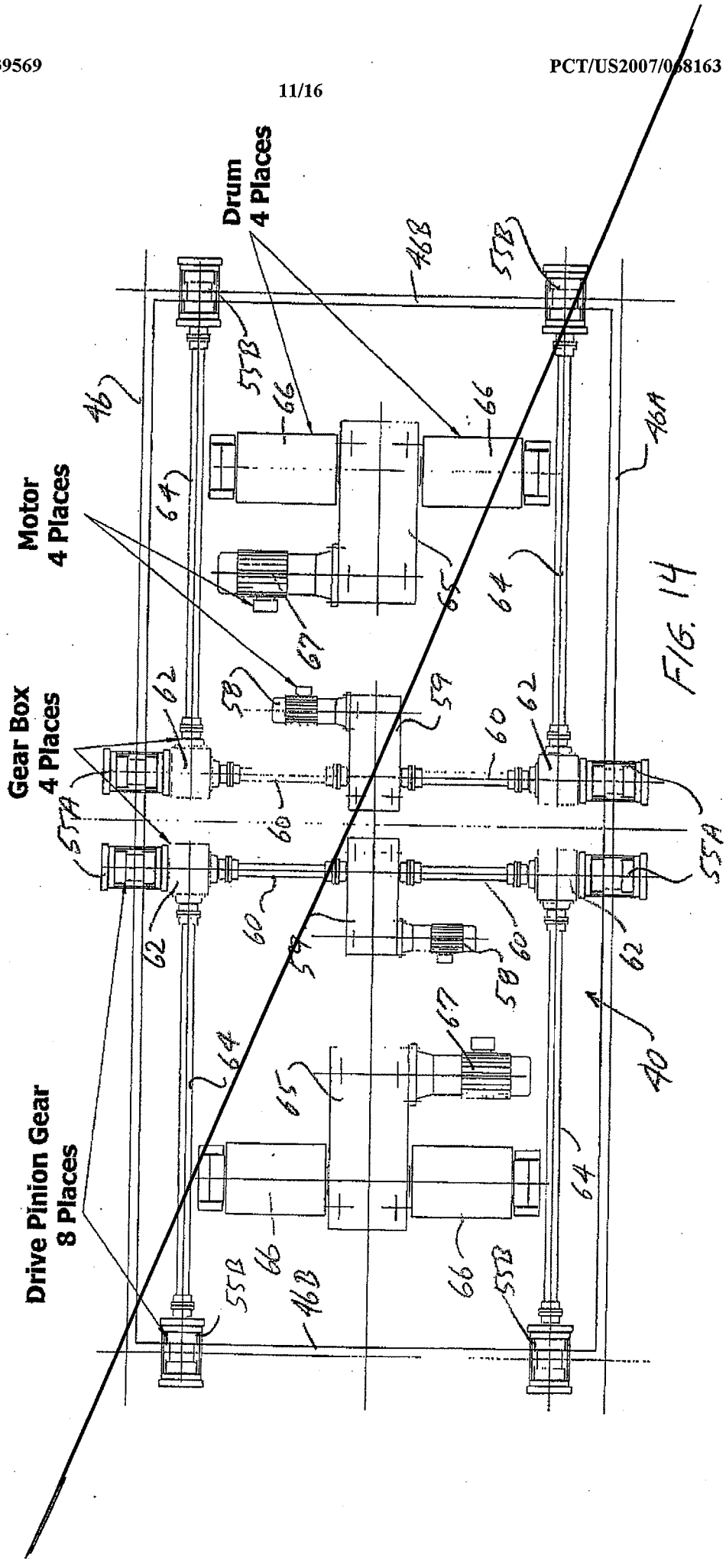
Drum
4 Places
Motor
4 Places
Gear Box
4 Places
Drive Pinion Gear
8 Places

FIG. 14

FIG. 15

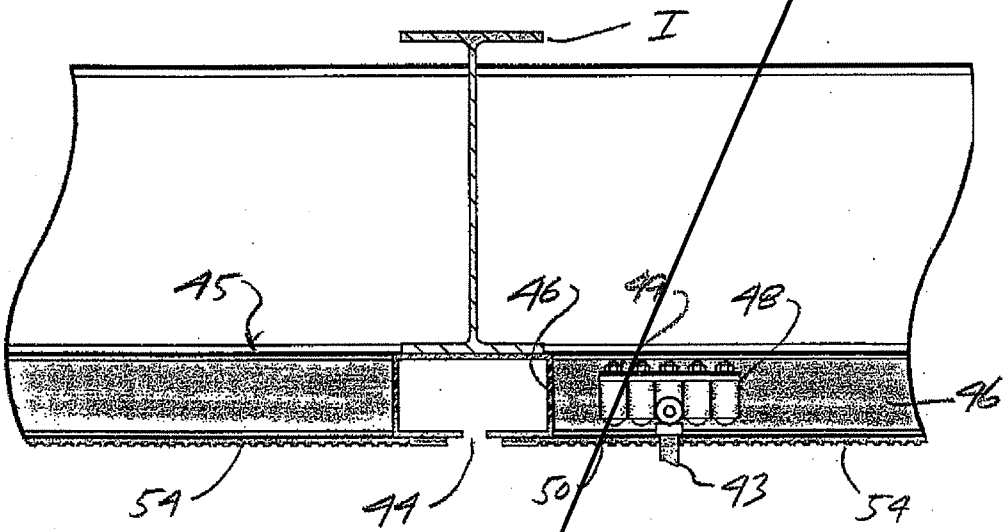

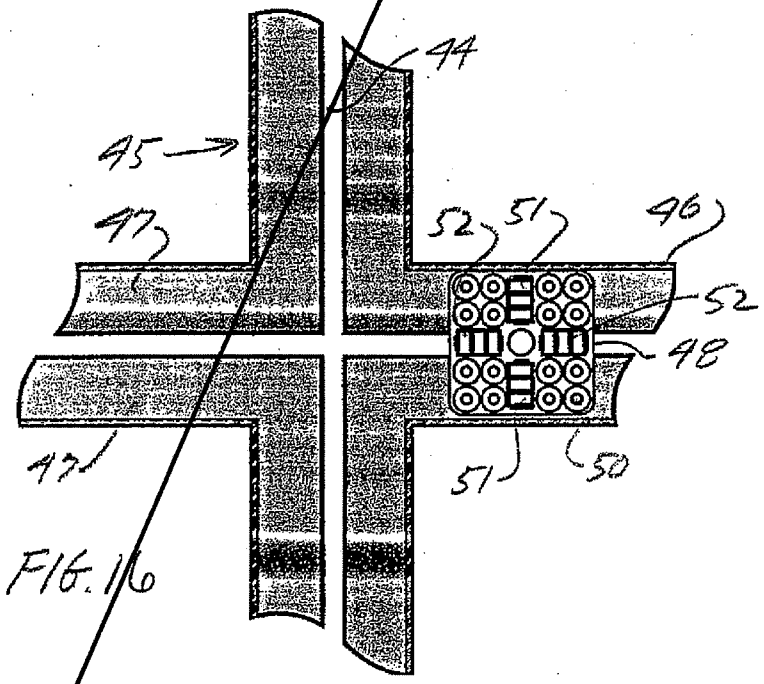

FIG. 16

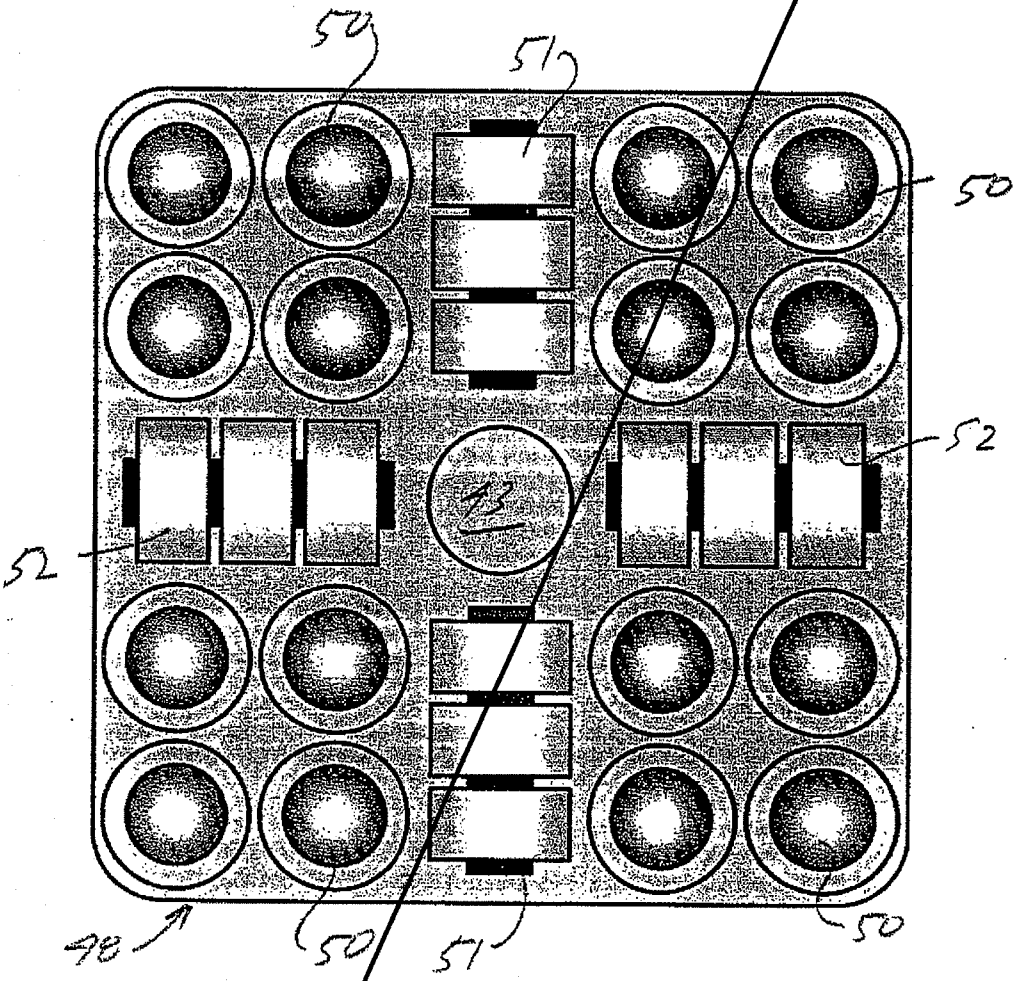

FIG. 17

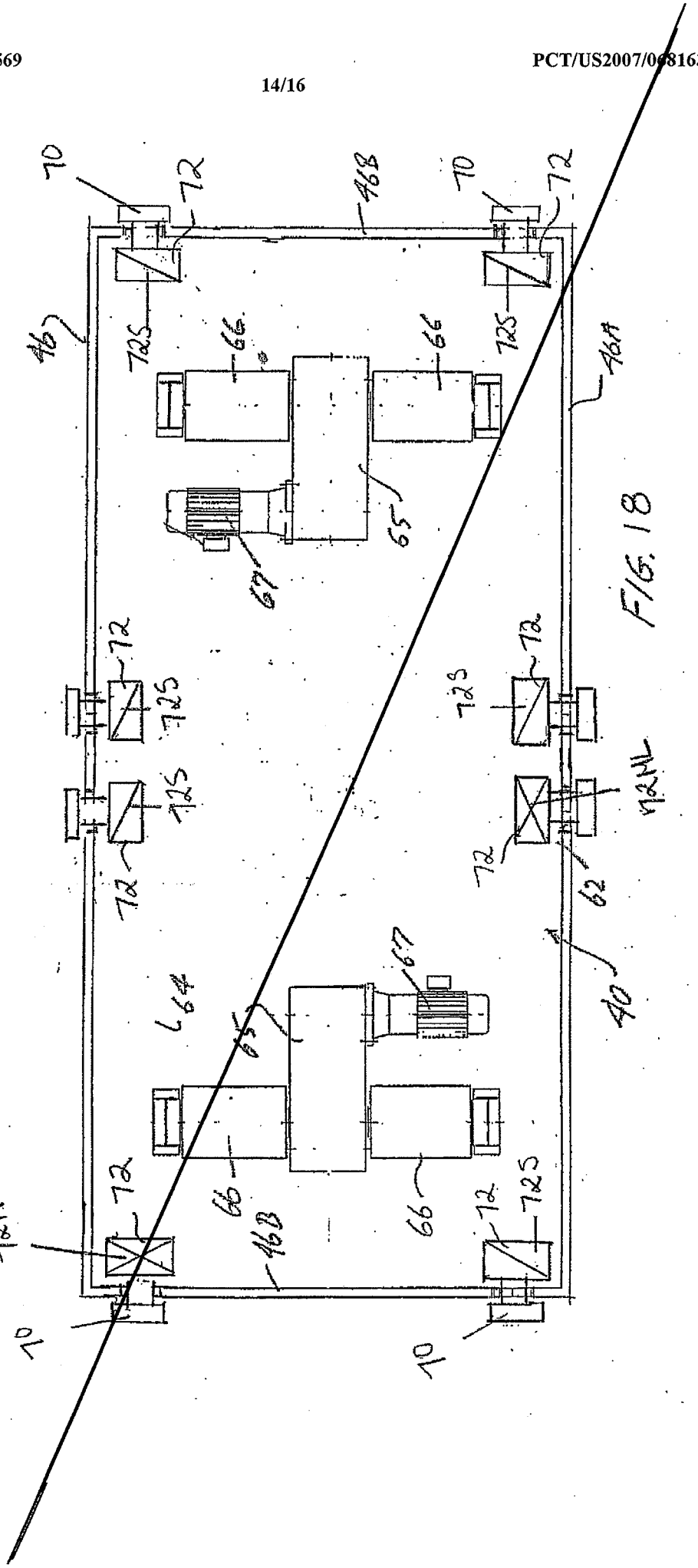

FIG. 18

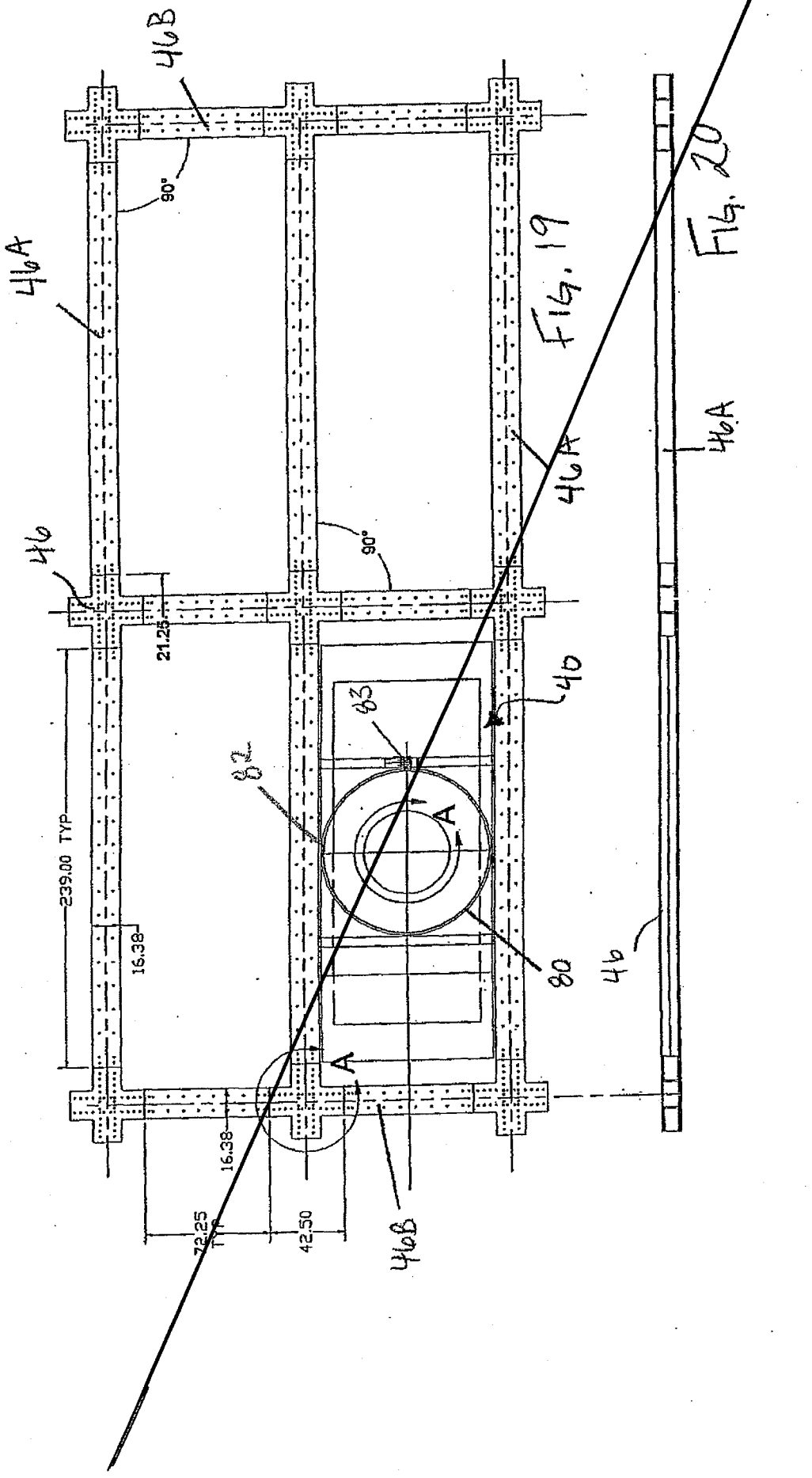
46B
90°
46A
46
21.25
239.00 TYP
16.38
16.38
72.25 TYP
42.50
46B
A
A
82
83
80
40
46A
46
46A
46

FIG. 19

FIG. 20

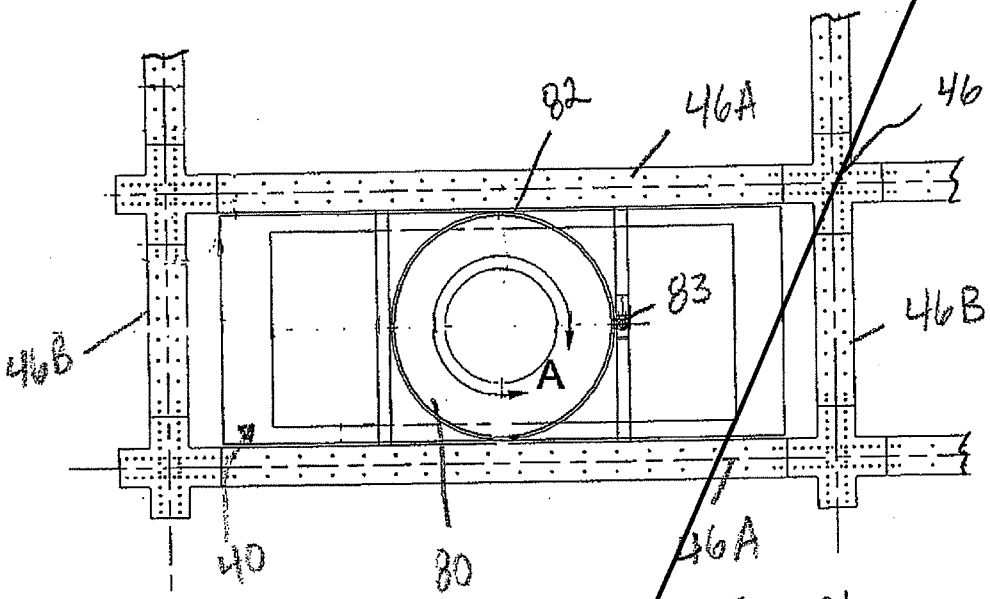

Fig. 21

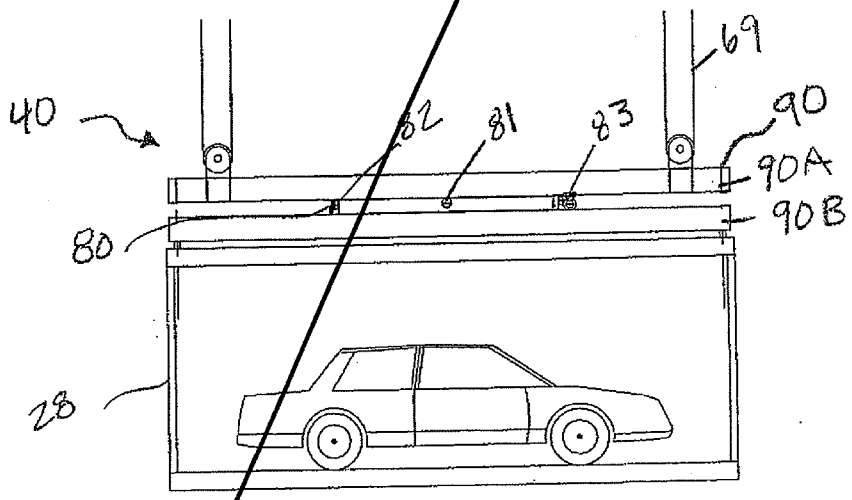

Fig. 22

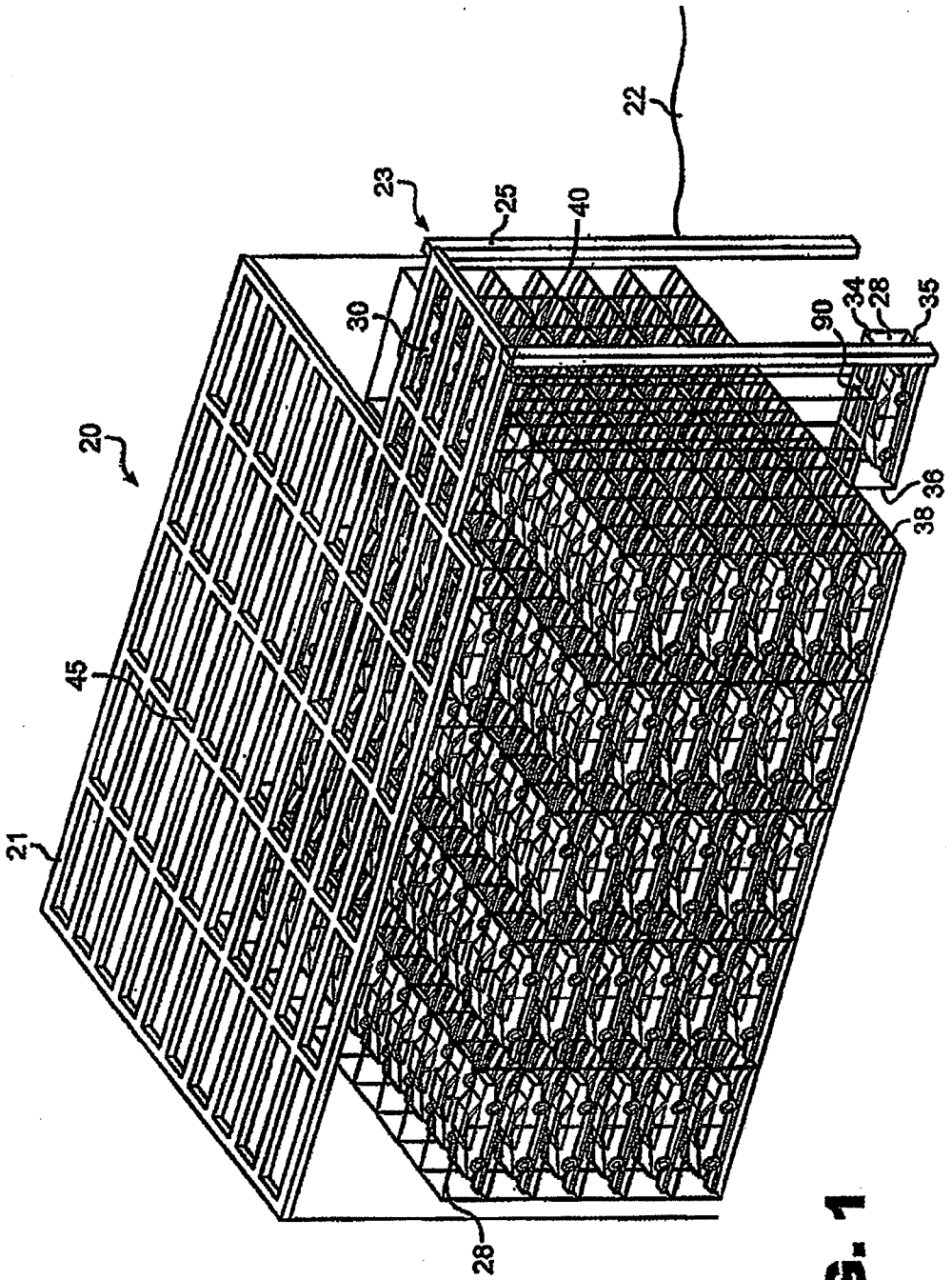

FIG. 1

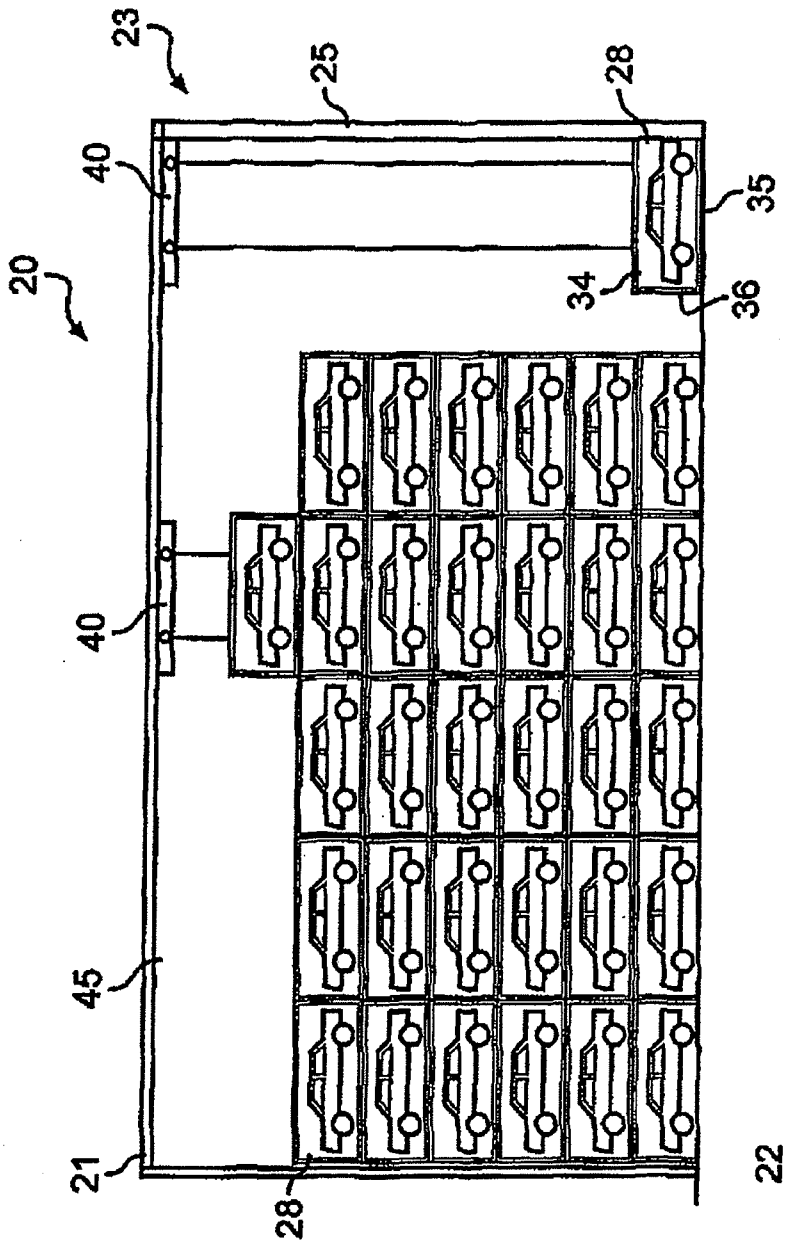

FIG. 2

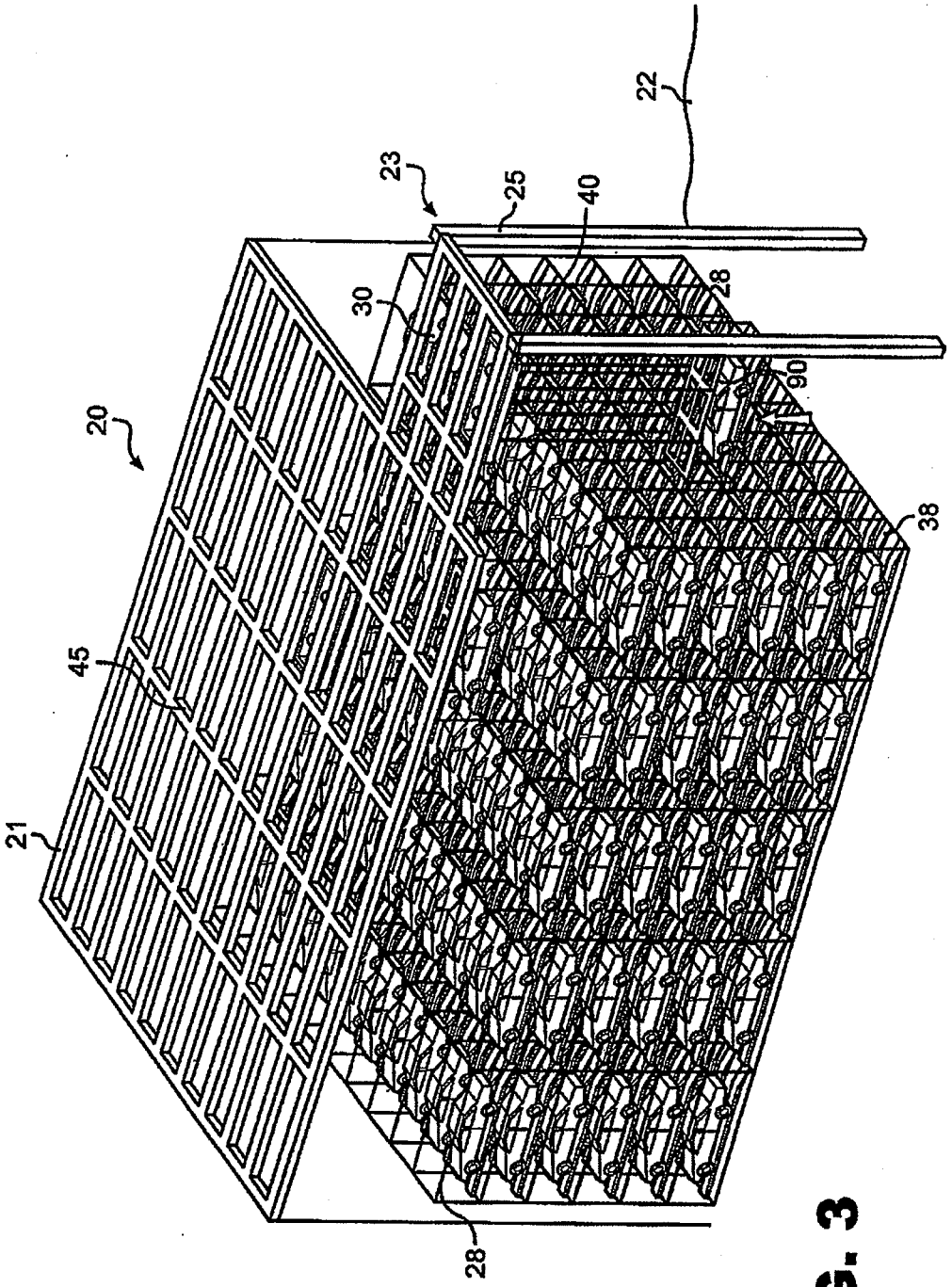

FIG. 3

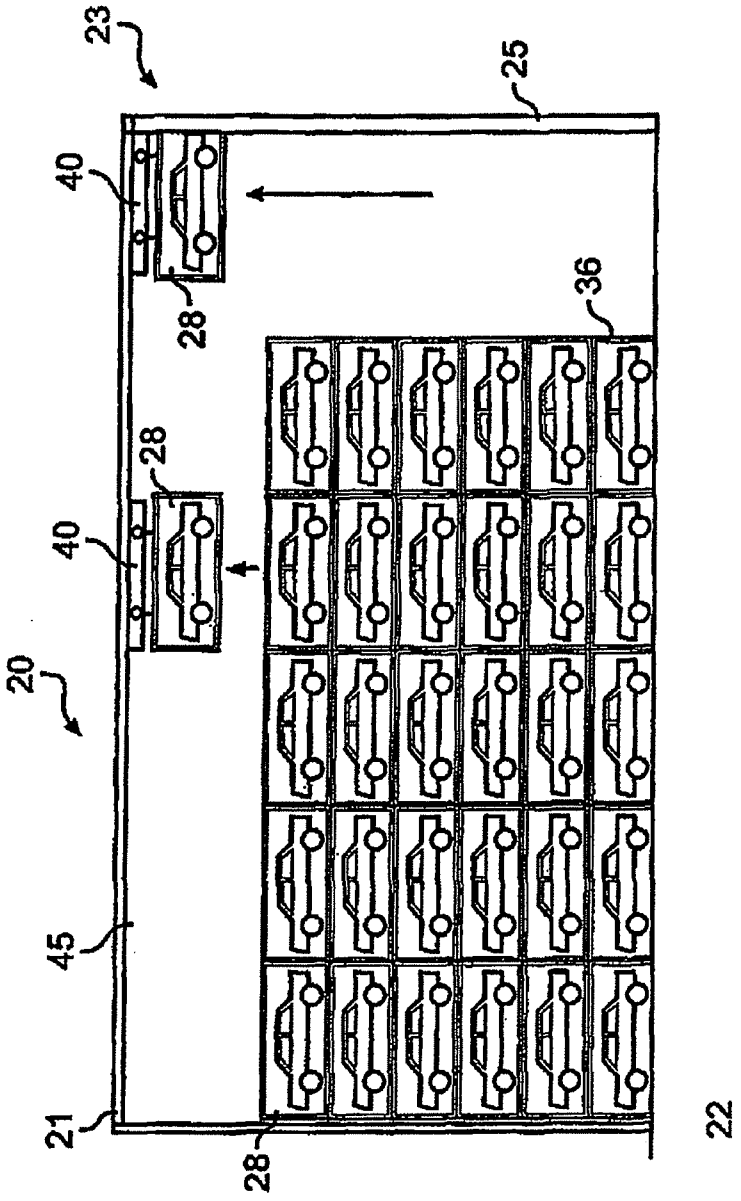

FIG. 4

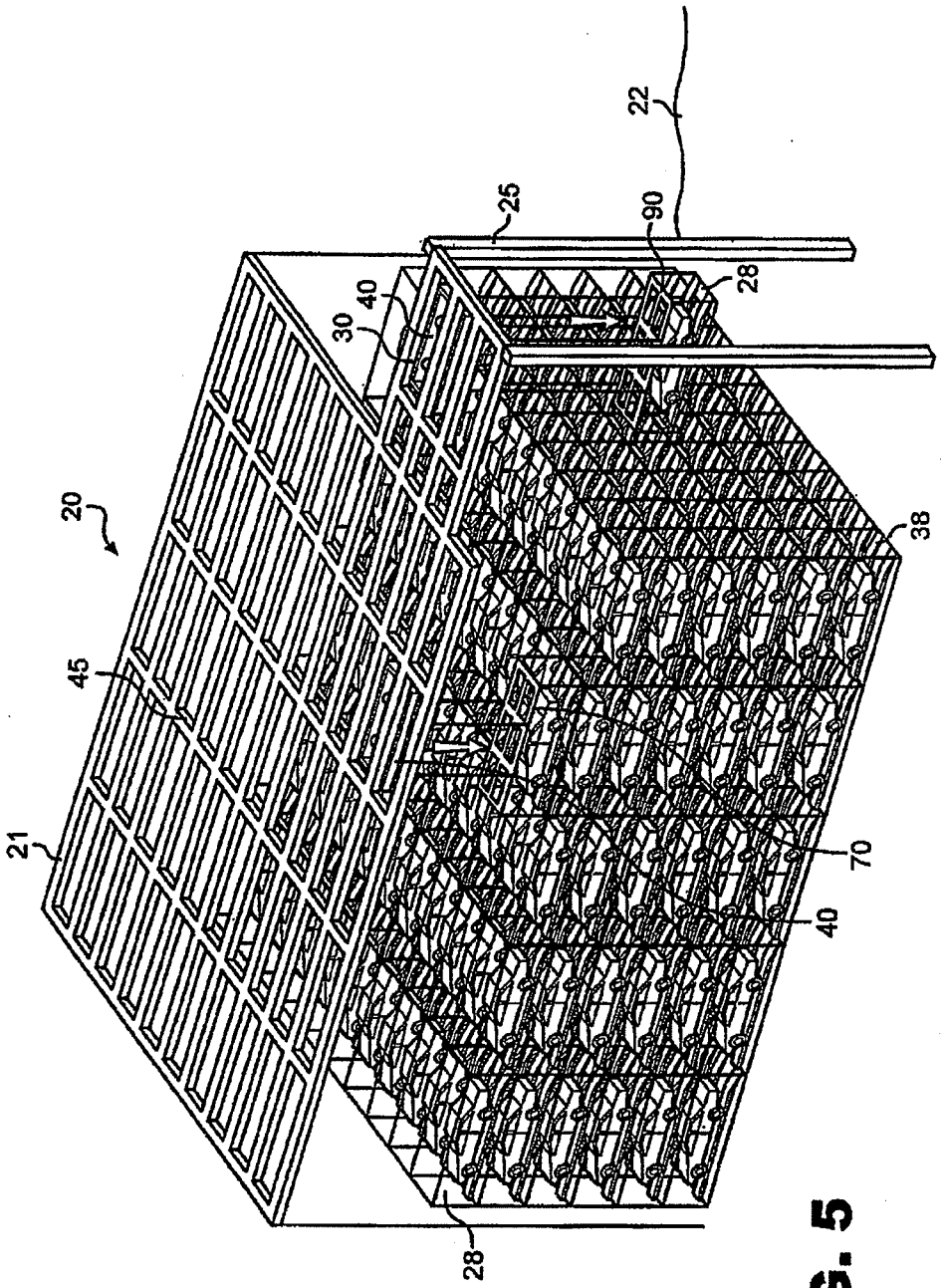

FIG. 5

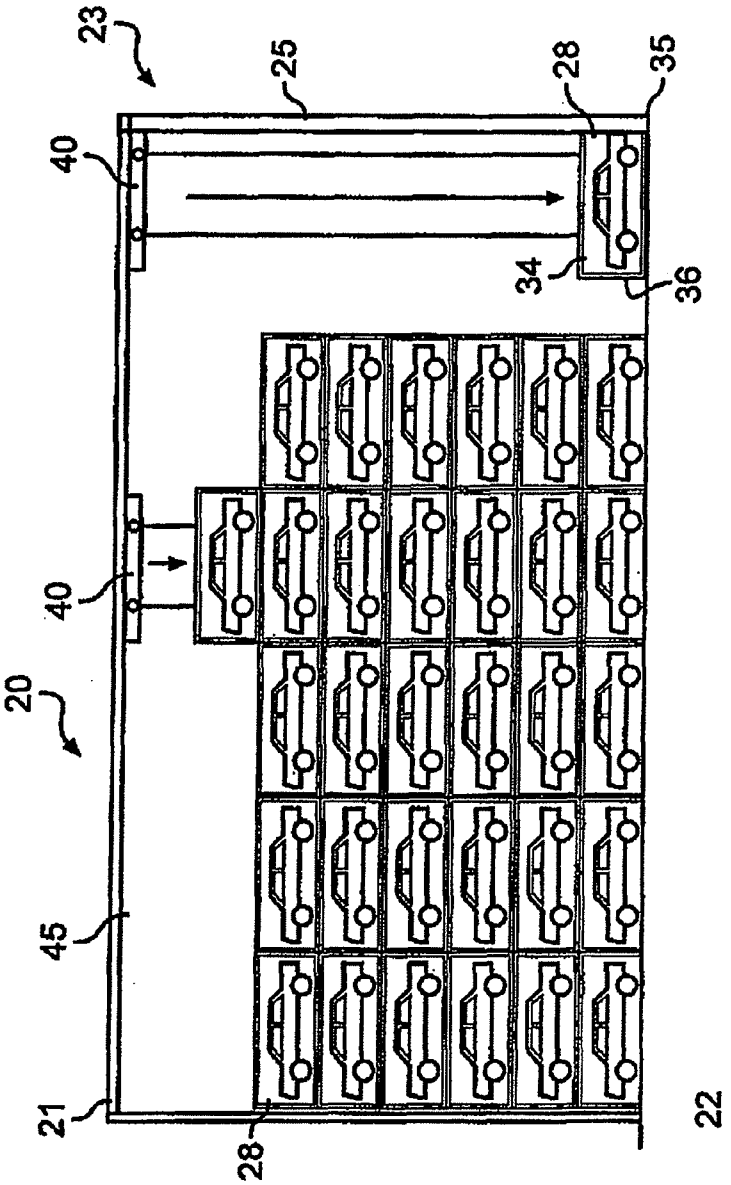

FIG. 6

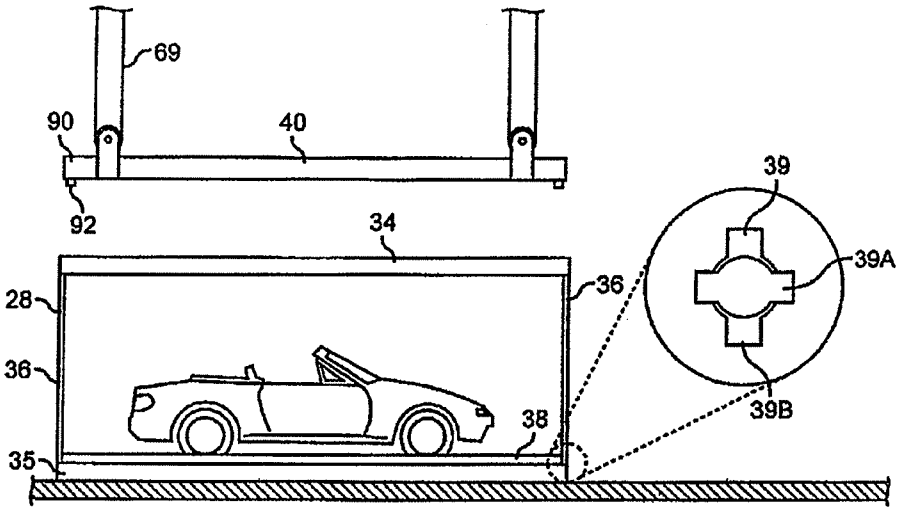
69
90
40
92
34
39
39A
28
36
36
38
39B
35

FIG. 7

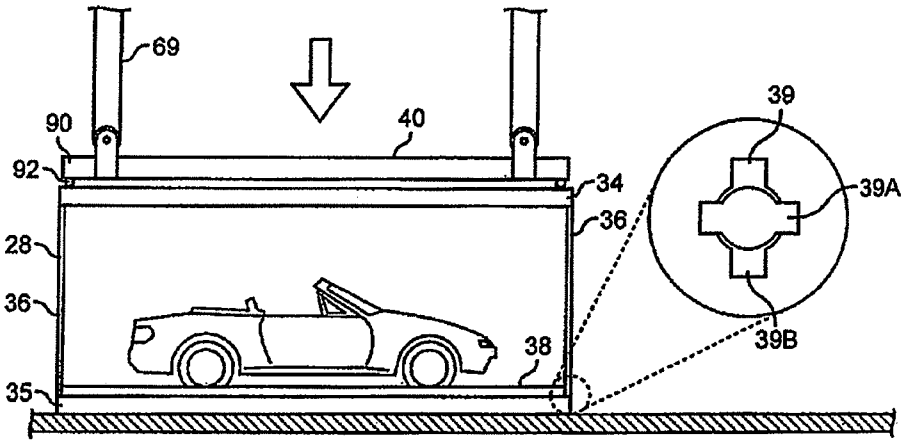
69
90
40
92
39
39A
34
36
28
36
38
39B
35

FIG. 8

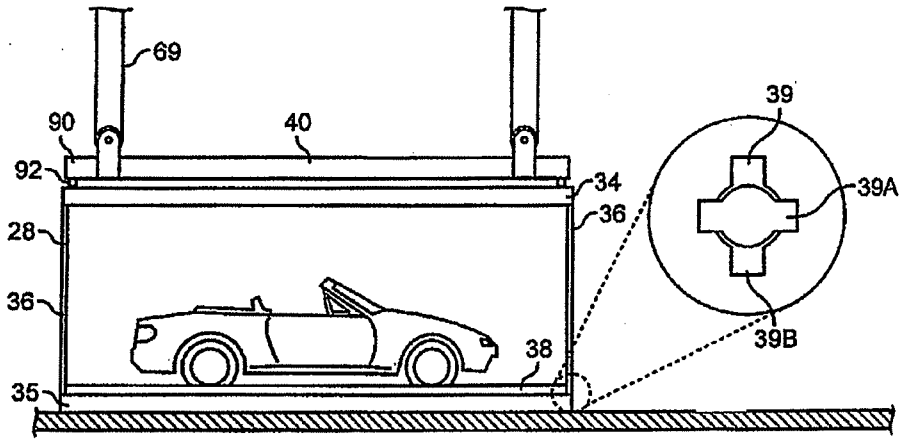
69
90
40
92
34
36
28
36
38
35
39
39A
39B

FIG. 9

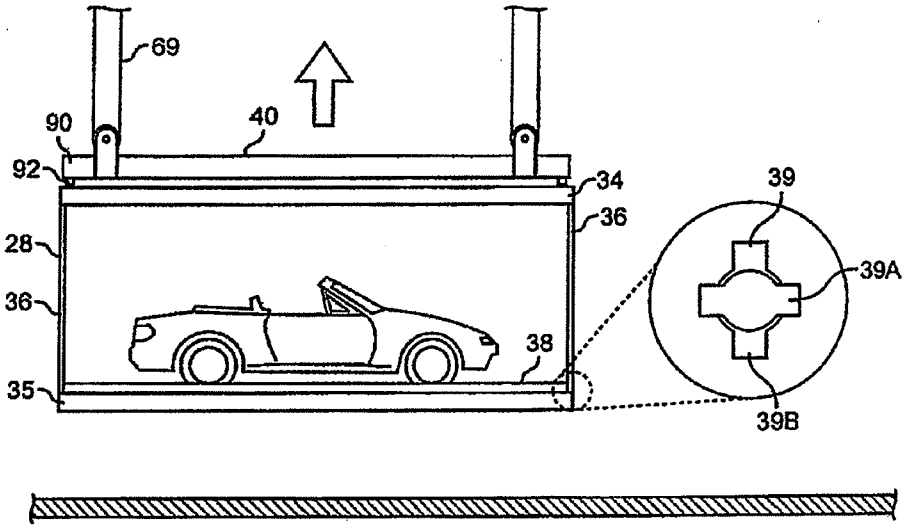
69
90
40
92
34
36
28
36
38
35
39
39A
39B

FIG. 10

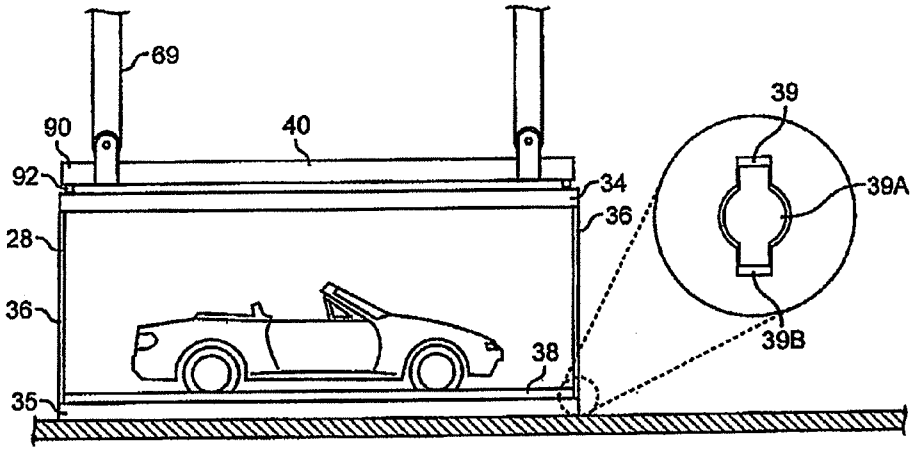
69
90
40
92
34
36
28
36
38
35
39
39A
39B

FIG. 11

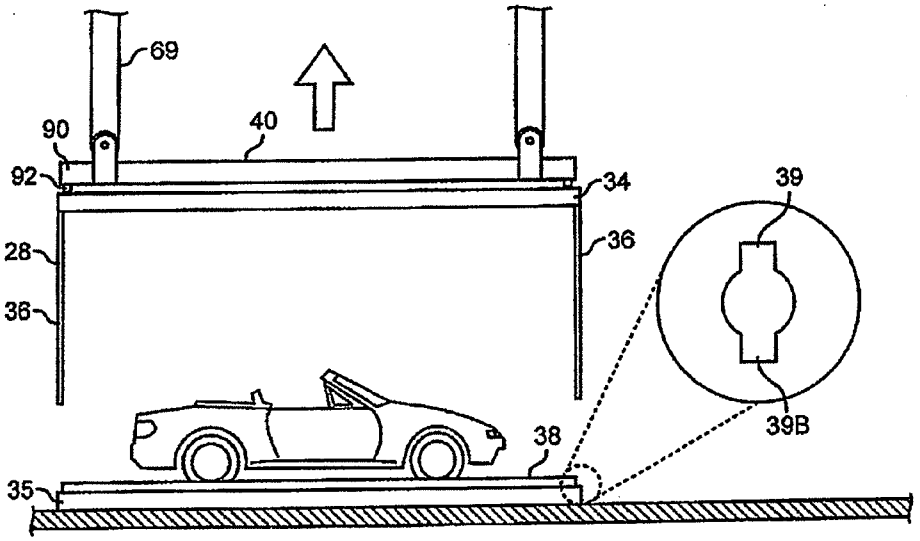
69
90
40
92
34
36
28
36
38
35
39
39B

FIG. 12

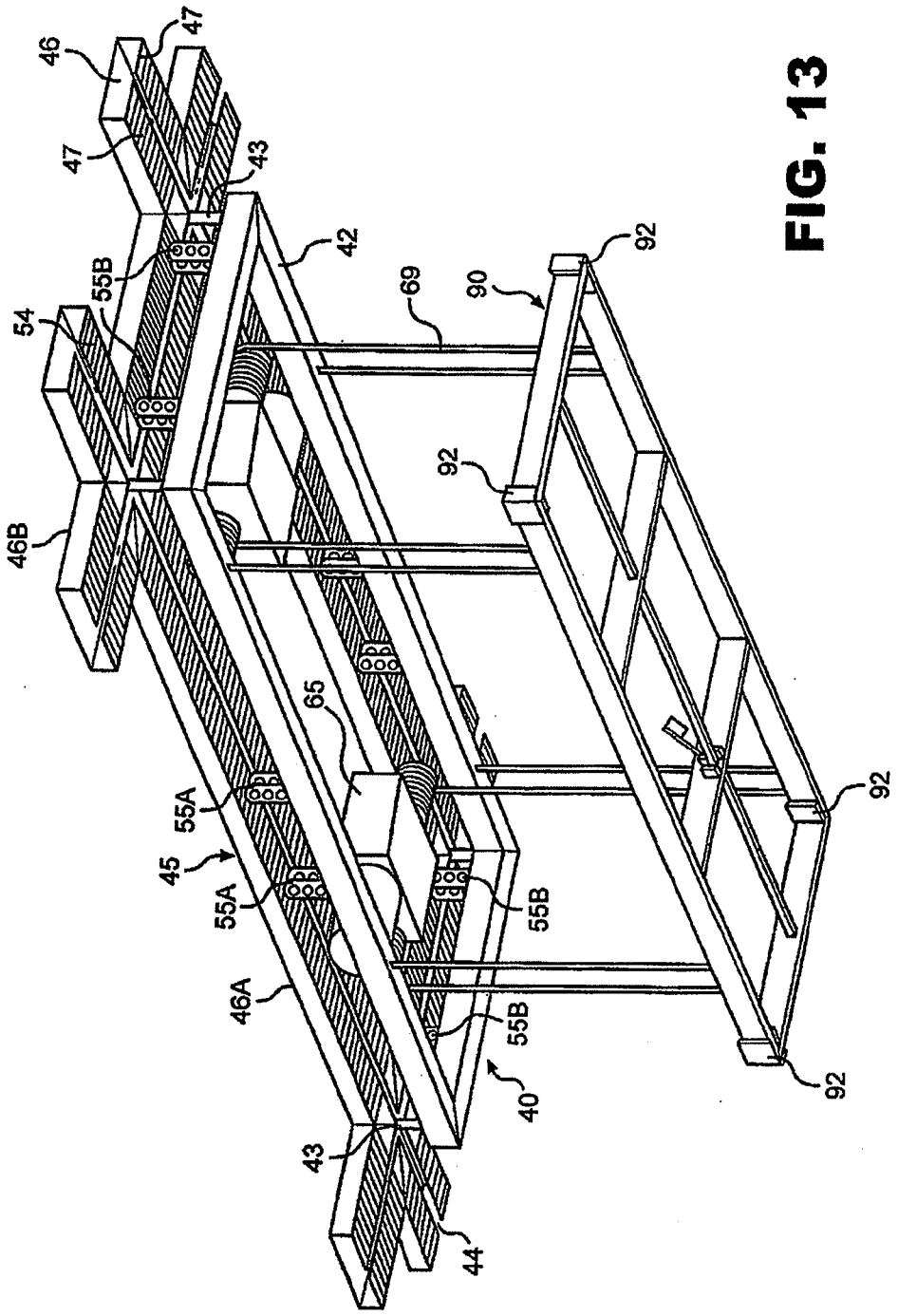
46
47
47
43
42
55B
54
69
90
92
92
46B
65
55A
45
55A
55B
46A
55B
40
92
92
43
44

FIG. 13

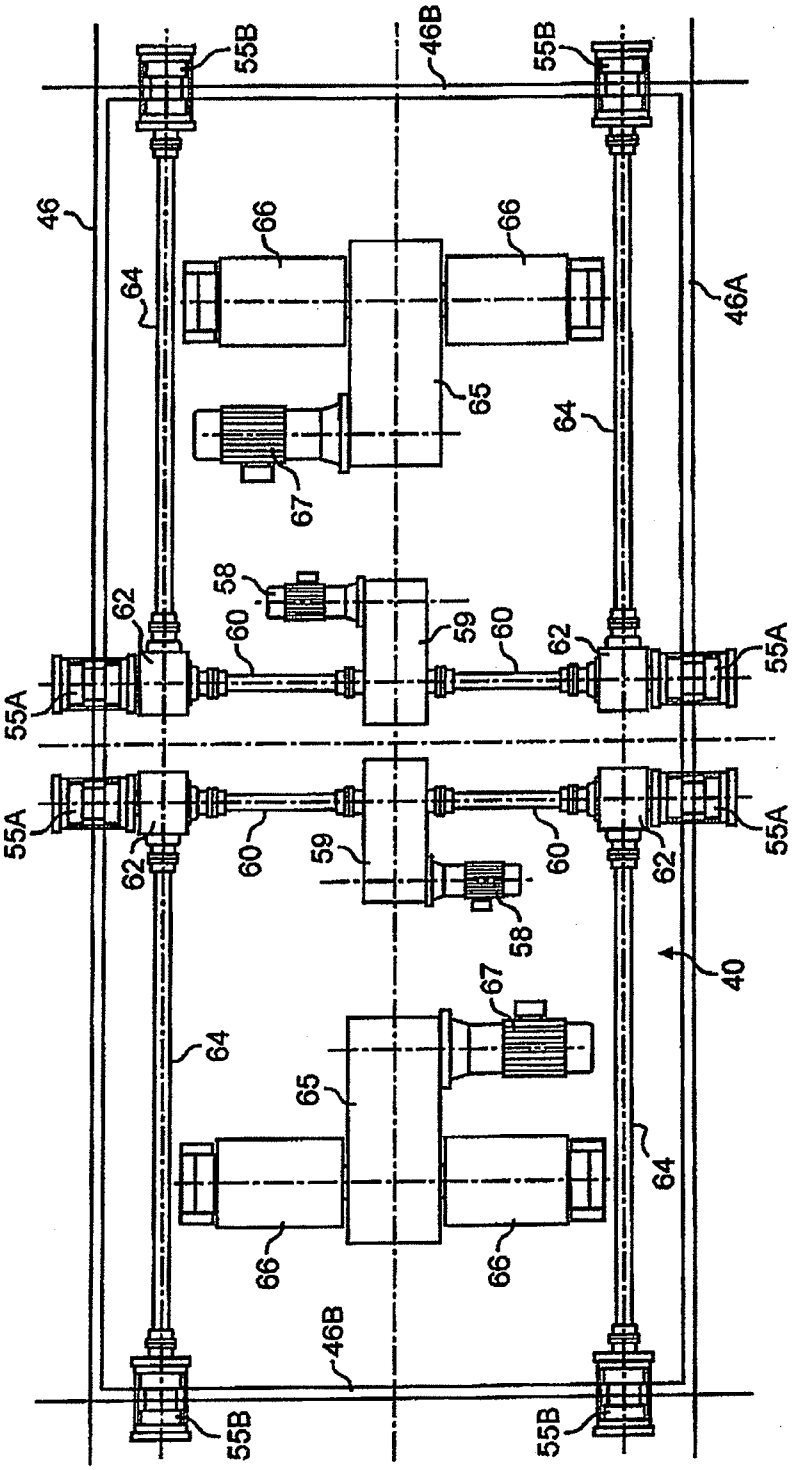
55B
46B
55B
46
66
66
64
46A
65
64
67
58
62
60
59
60
62
55A
55A
55A
62
60
59
60
62
55A
58
40
67
64
65
64
66
66
46B
55B
55B

FIG. 14

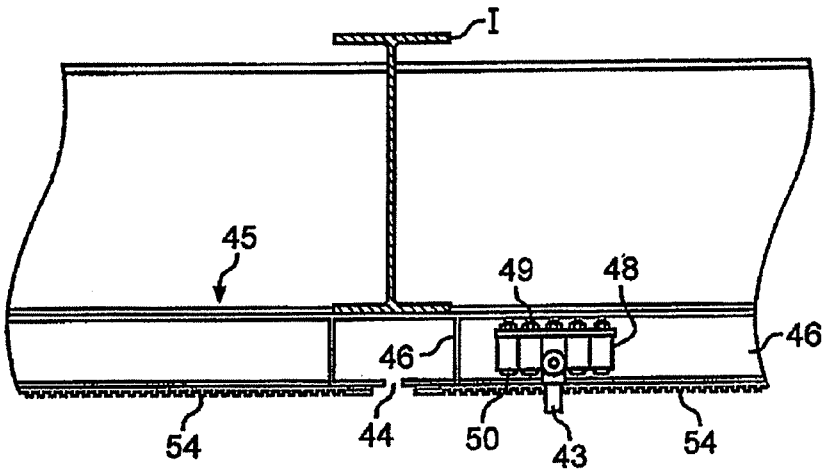

FIG. 15

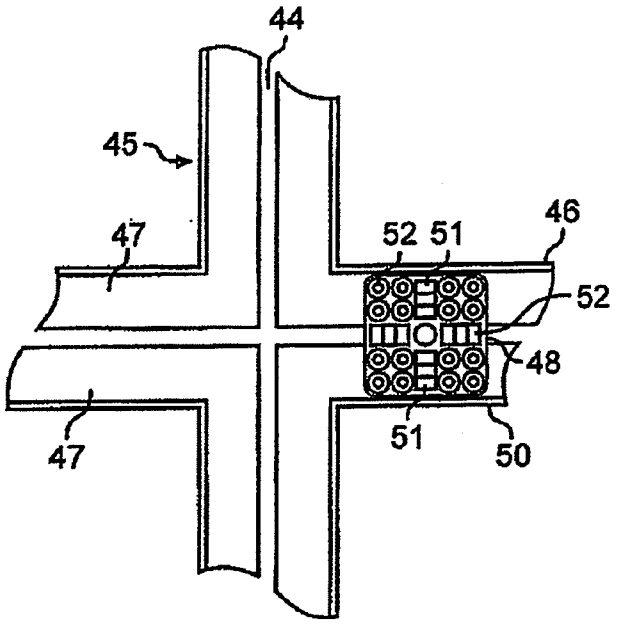

FIG. 16

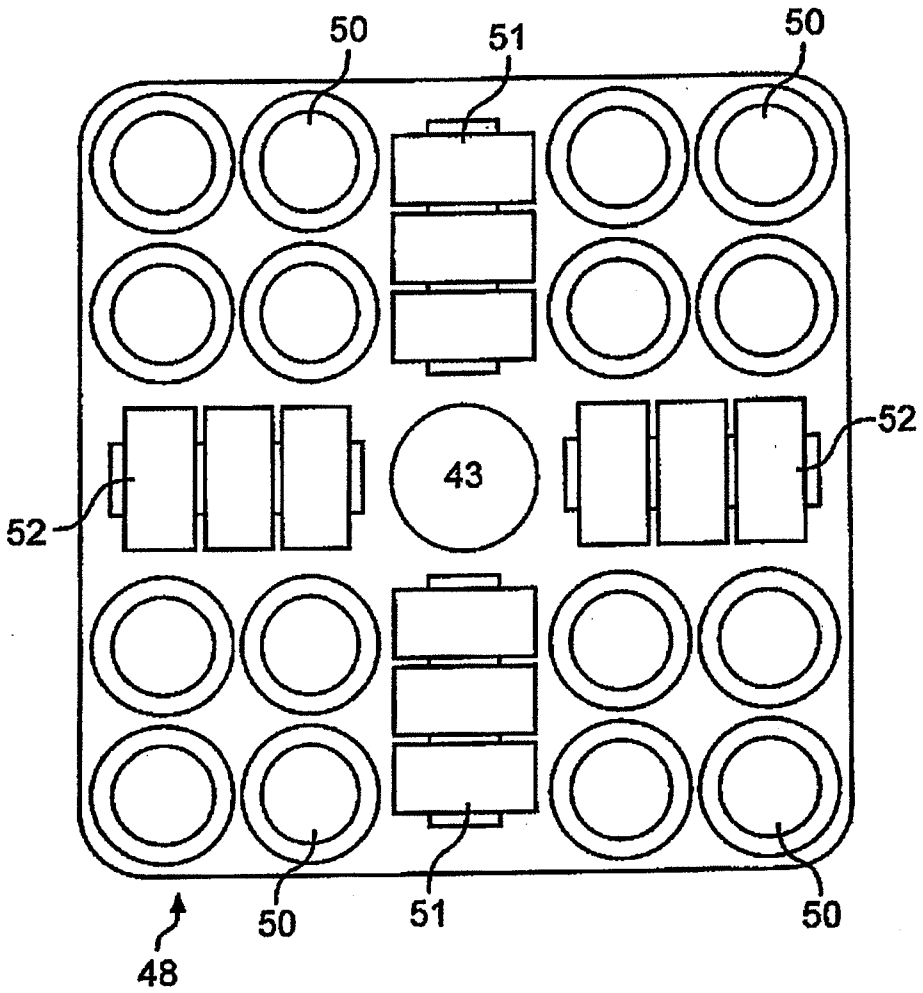

FIG. 17

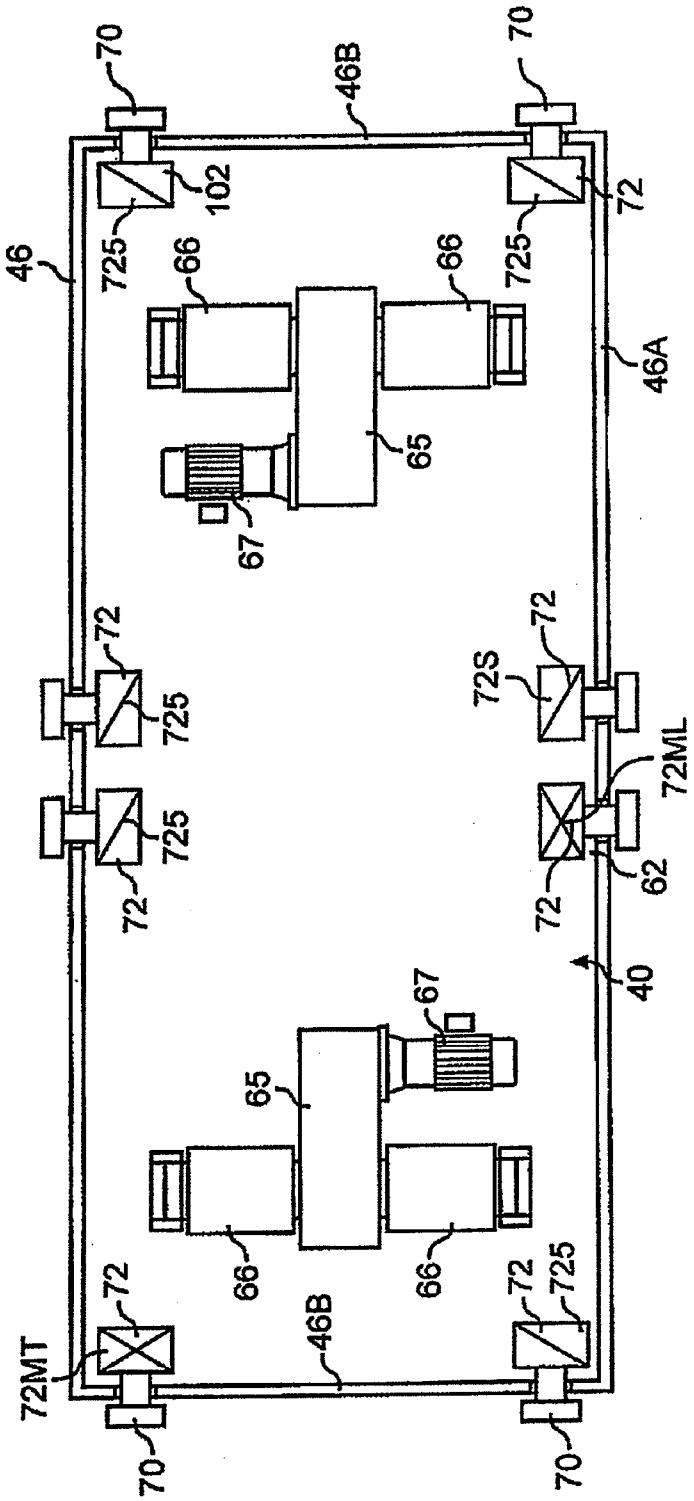
70
46B
70
102
72
725
725
46
66
66
46A
65
67
72
72
725
72S
72ML
725
72
72
62
40
67
65
66
66
72
72
725
72MT
46B
70
70

FIG. 18

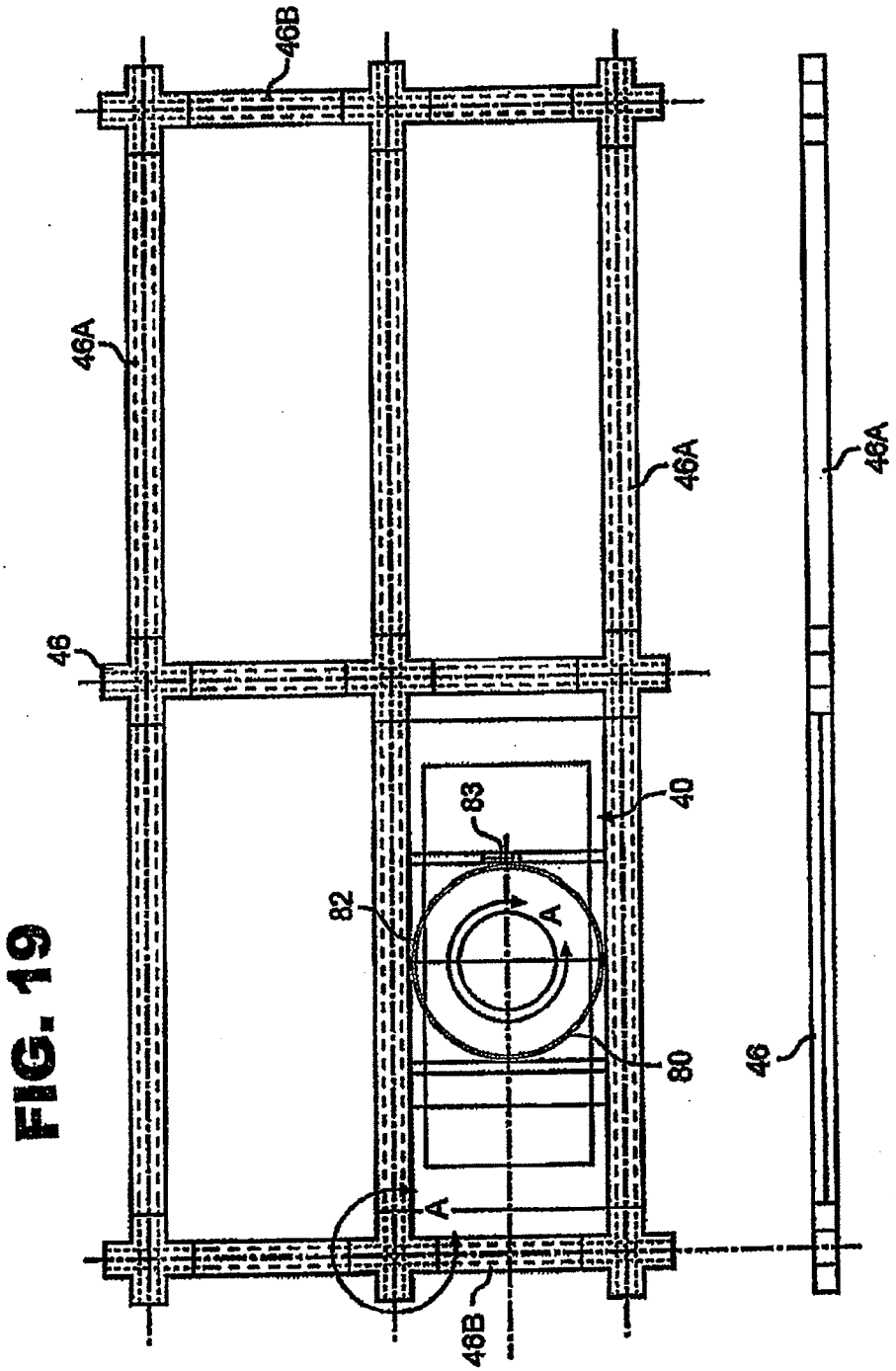

FIG. 19

FIG. 20

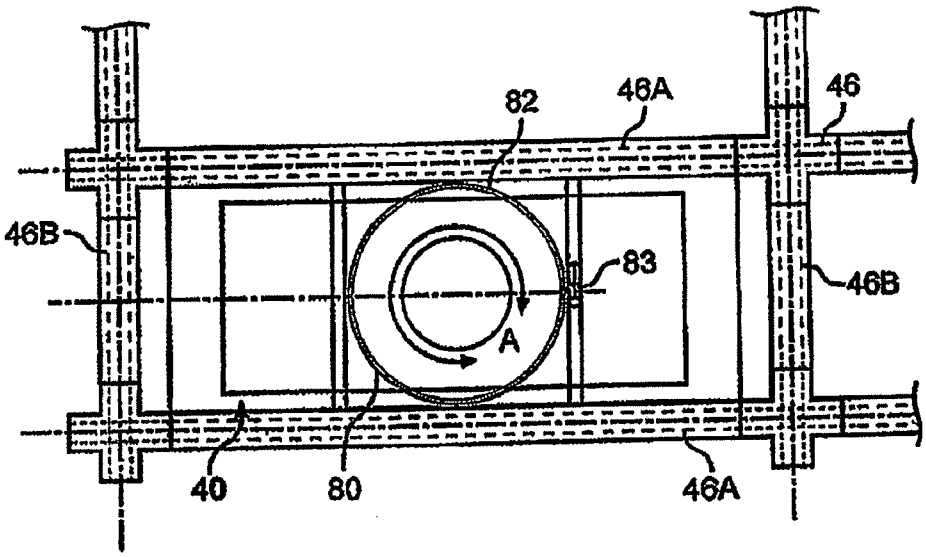

FIG. 21

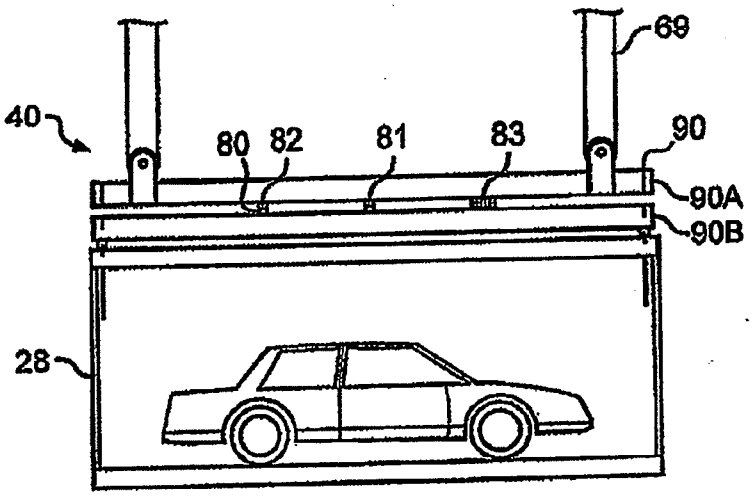

FIG. 22