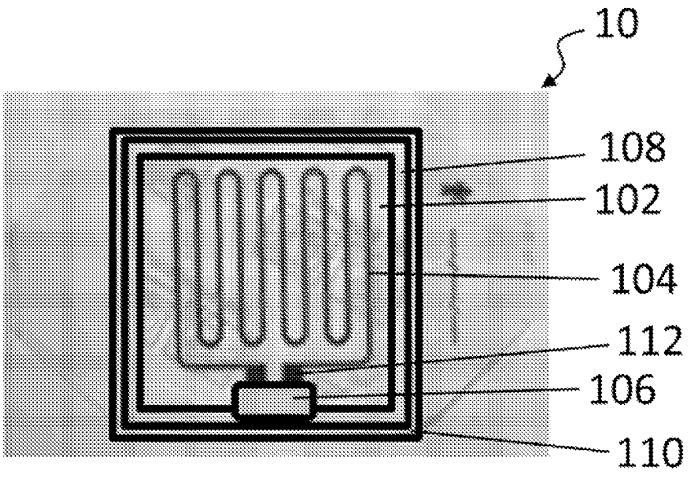

Figure 1A

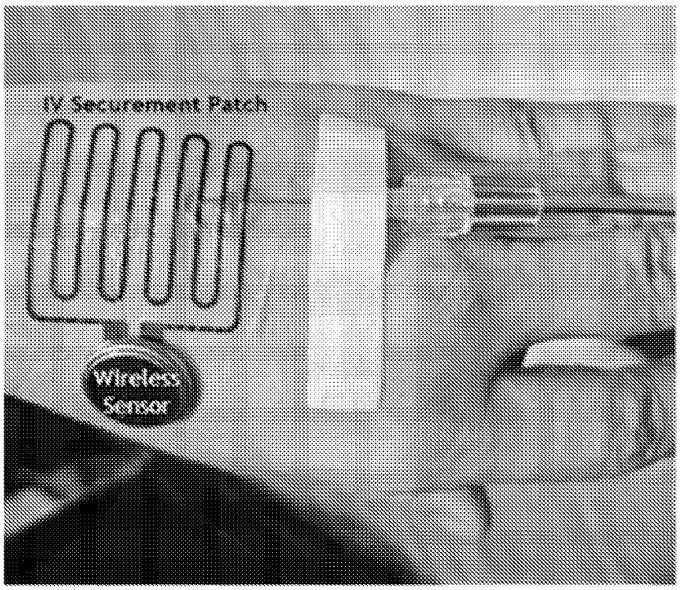

Figure 1B

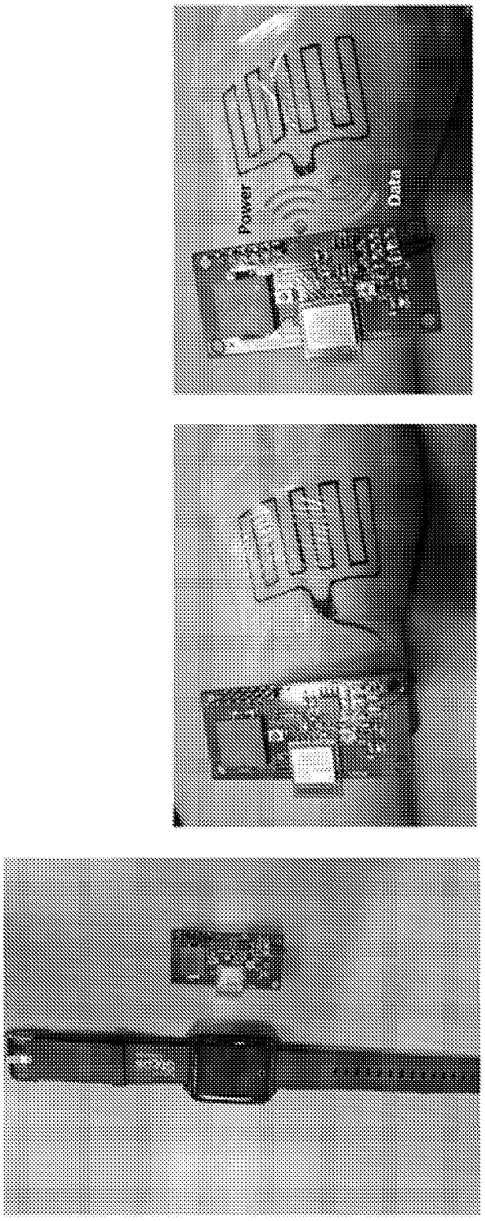

Figure 2

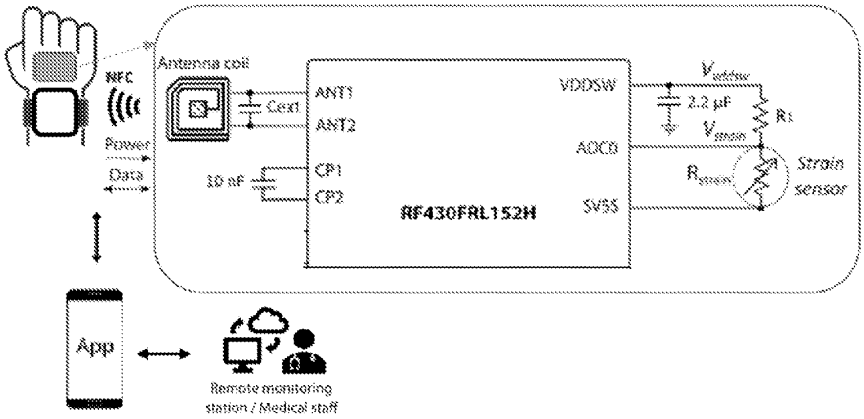

Figure 3

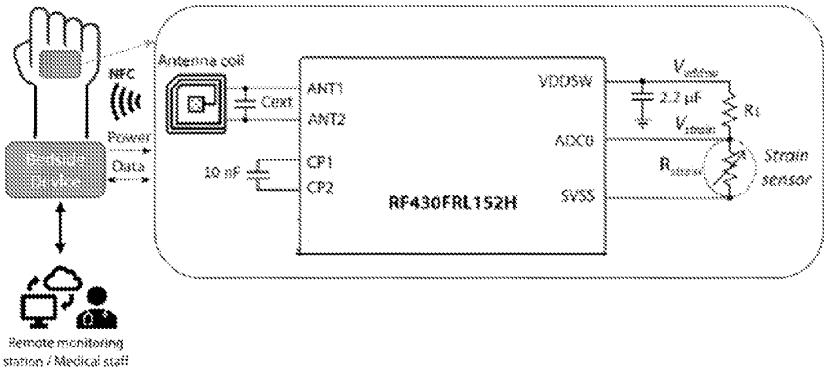

Figure 4

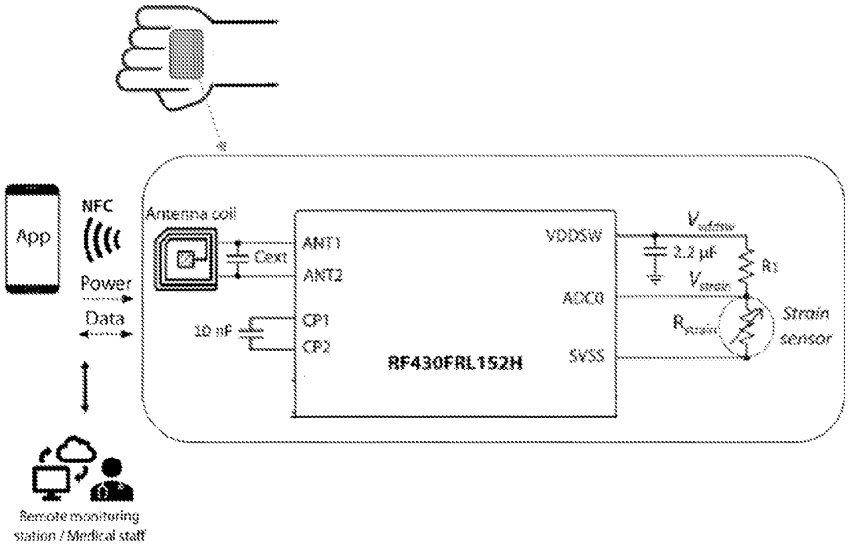

Figure 5

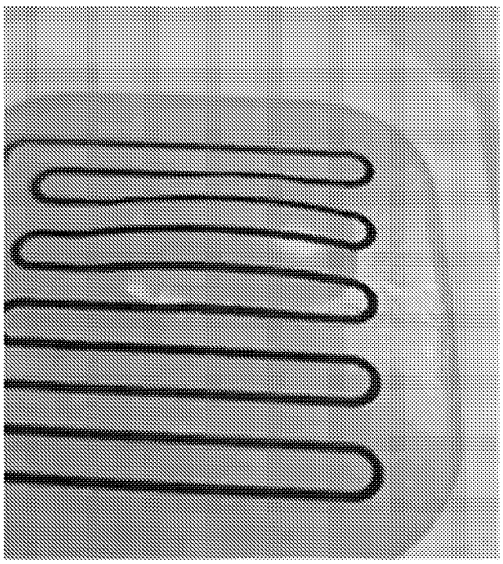

Figure 6