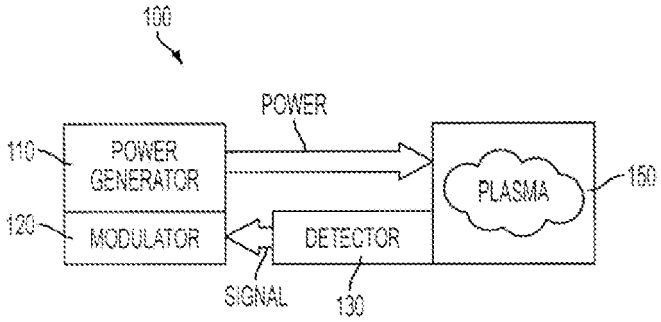

FIG. 1
PRIOR ART

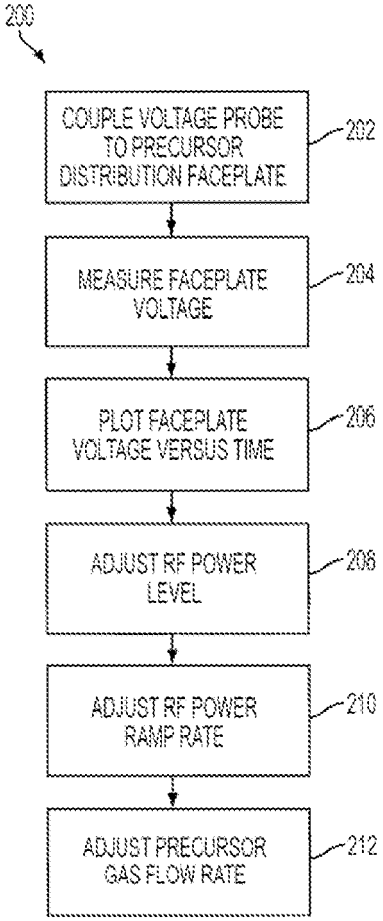

FIG. 2
PRIOR ART

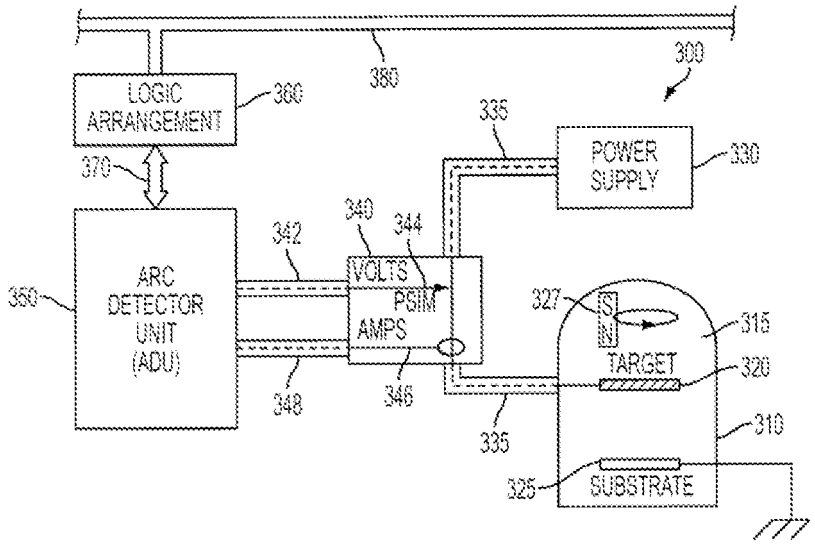

FIG. 3
PRIOR ART

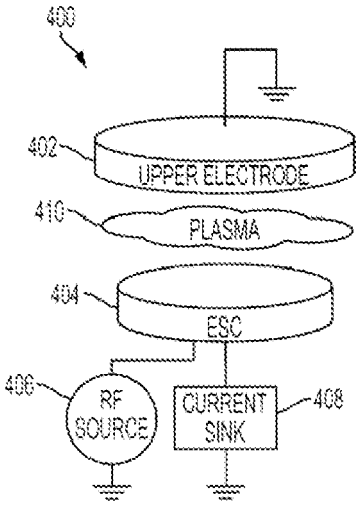

FIG. 4

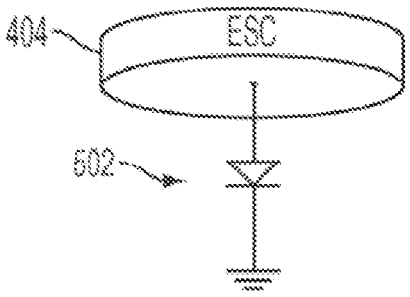

FIG. 5

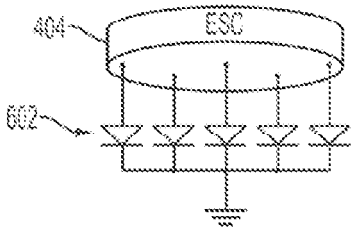

FIG. 6

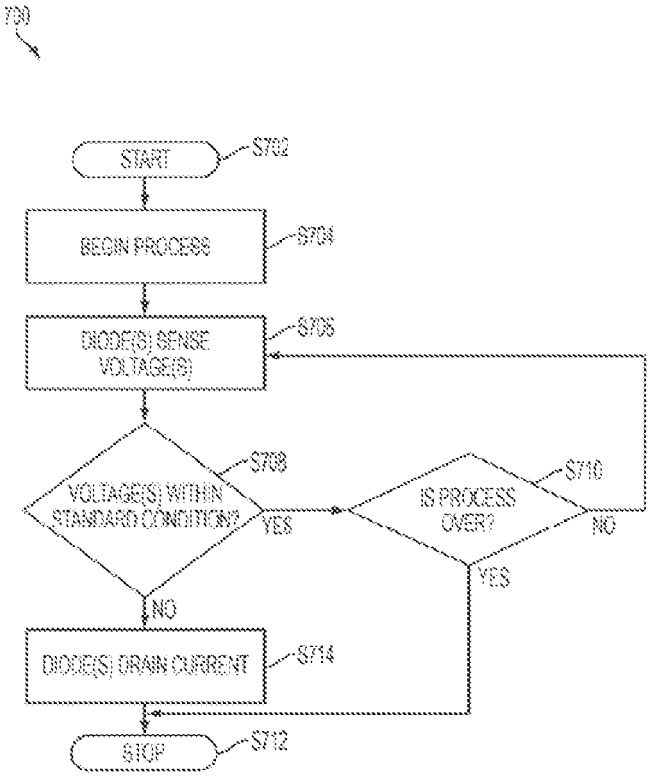

FIG. 7

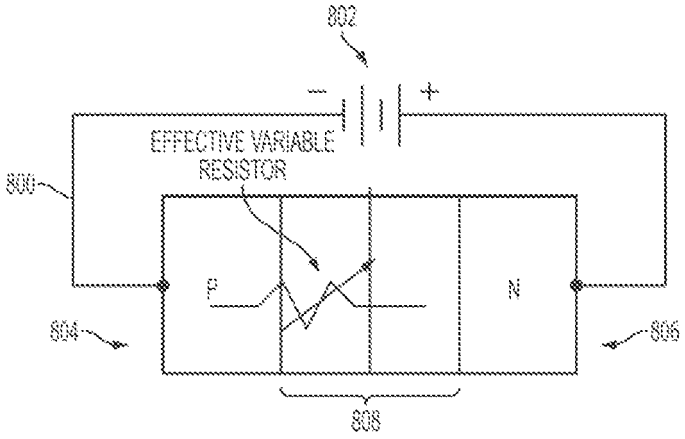
802
EFFECTIVE VARIABLE RESISTOR
800
P
N
804
806
808

FIG. 8

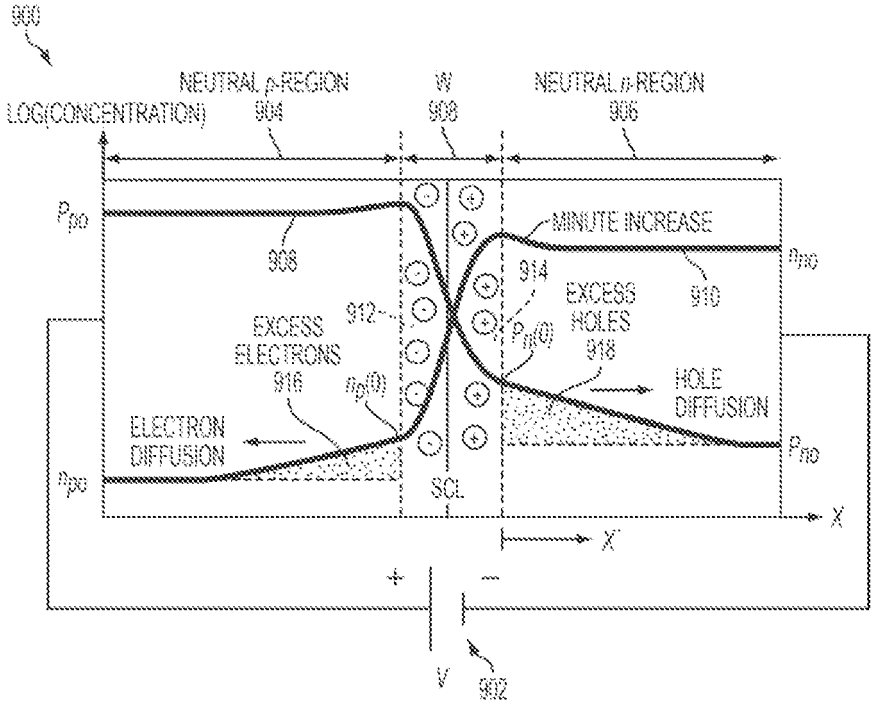
900
NEUTRAL p-REGION 904
W 908
NEUTRAL n-REGION 906
LOG(CONCENTRATION)
P_{po}
n_{no}
P_{no}
n_{po}
908
MINUTE INCREASE
910
914
EXCESS HOLES 918
$p_n(0)$
912
EXCESS ELECTRONS 916
$n_p(0)$
HOLE DIFFUSION
ELECTRON DIFFUSION
SCL
X
X'
+
−
V
902

FIG. 9

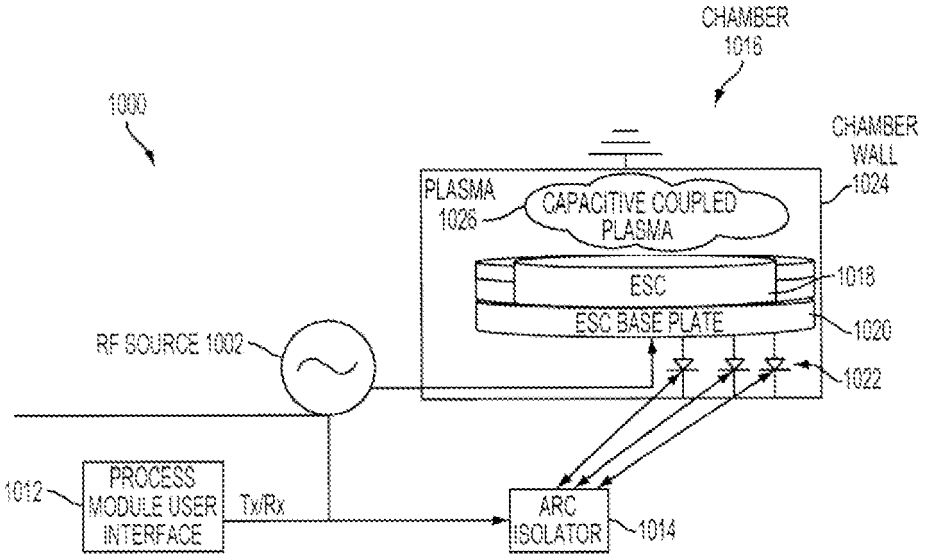
CHAMBER
1016
1000
CHAMBER
WALL
1024
PLASMA
1026
CAPACITIVE COUPLED
PLASMA
ESC
1018
ESC BASE PLATE
1020
RF SOURCE 1002
1022
1012
PROCESS
MODULE USER
INTERFACE
Tx/Rx
ARC
ISOLATOR
1014

FIG. 10

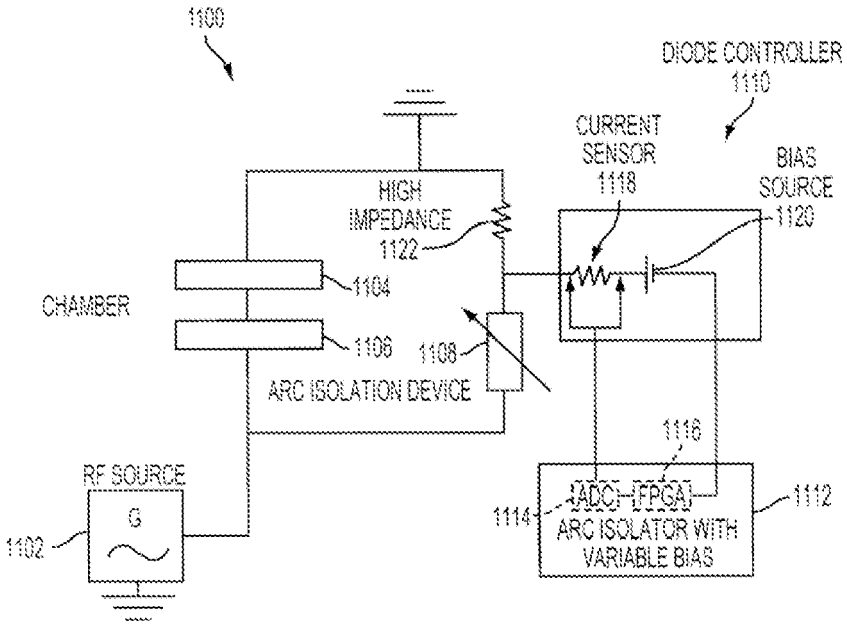
1100
DIODE CONTROLLER
1110
CURRENT
SENSOR
1118
BIAS
SOURCE
1120
HIGH
IMPEDANCE
1122
CHAMBER
1104
1106
1108
ARC ISOLATION DEVICE
1116
RF SOURCE
G
1102
ADC
FPGA
1114
ARC ISOLATOR WITH
VARIABLE BIAS
1112

FIG. 11

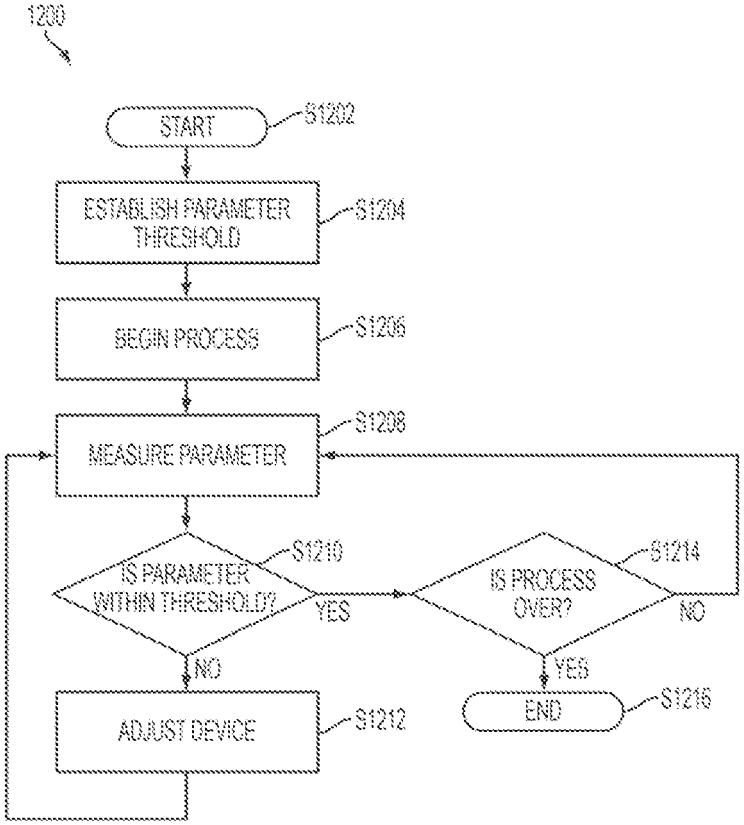
1200
START
S1202
ESTABLISH PARAMETER THRESHOLD
S1204
BEGIN PROCESS
S1206
MEASURE PARAMETER
S1208
IS PARAMETER WITHIN THRESHOLD?
S1210
YES
NO
IS PROCESS OVER?
S1214
NO
YES
ADJUST DEVICE
S1212
END
S1216

FIG. 12