(12) INTERNATIONAL APPLICATION PUBLISHED UNDER THE PATENT COOPERATION TREATY (PCT)

(19) World Intellectual Property Organization
International Bureau

(43) International Publication Date
14 February 2008 (14.02.2008)

PCT

(10) International Publication Number
WO 2008/018030 A3

(51) International Patent Classification:
H01L 27/30 (2006.01) *H01L 31/048* (2006.01)

(21) International Application Number:
PCT/IB2007/053132

(22) International Filing Date: 8 August 2007 (08.08.2007)

(25) Filing Language: Italian

(26) Publication Language: English

(30) Priority Data:
SM-A-200600027 8 August 2006 (08.08.2006) SM

(71) Applicants and
(72) Inventors: **SEGATO, Stefano** [IT/IT]; Corso Padova, 140/A, I-36100 Vicenza (IT). **MAROSCIA, Antonio** [IT/IT]; Viale Ferrarin, 57, I-36100 Vicenza (IT). **CAPPELLI, Fabio** [IT/IT]; Via Fornace, 17/a, I-40068 San Lezaro Di Savenza (IT).

(74) Agent: **MAROSCIA, Antonio**; Maroscia & Associati S.r.l., Contrà S. Caterina, 29, I-36100 Vicenza (IT).

(81) Designated States *(unless otherwise indicated, for every kind of national protection available)*: AE, AG, AL, AM, AT, AU, AZ, BA, BB, BG, BH, BR, BW, BY, BZ, CA, CH, CN, CO, CR, CU, CZ, DE, DK, DM, DO, DZ, EC, EE, EG, ES, FI, GB, GD, GE, GH, GM, GT, HN, HR, HU, ID, IL, IN, IS, JP, KE, KG, KM, KN, KP, KR, KZ, LA, LC, LK, LR, LS, LT, LU, LY, MA, MD, ME, MG, MK, MN, MW, MX, MY, MZ, NA, NG, NI, NO, NZ, OM, PG, PH, PL, PT, RO, RS, RU, SC, SD, SE, SG, SK, SL, SM, SV, SY, TJ, TM, TN, TR, TT, TZ, UA, UG, US, UZ, VC, VN, ZA, ZM, ZW.

(84) Designated States *(unless otherwise indicated, for every kind of regional protection available)*: ARIPO (BW, GH, GM, KE, LS, MW, MZ, NA, SD, SL, SZ, TZ, UG, ZM, ZW), Eurasian (AM, AZ, BY, KG, KZ, MD, RU, TJ, TM), European (AT, BE, BG, CH, CY, CZ, DE, DK, EE, ES, FI, FR, GB, GR, HU, IE, IS, IT, LT, LU, LV, MC, MT, NL, PL, PT, RO, SE, SI, SK, TR), OAPI (BF, BJ, CF, CG, CI, CM, GA, GN, GQ, GW, ML, MR, NE, SN, TD, TG).

Published:
— *with international search report*
— *before the expiration of the time limit for amending the claims and to be republished in the event of receipt of amendments*

(88) Date of publication of the international search report:
2 May 2008

(54) Title: MULTILAYER PHOTOVOLTAIC DEVICE AND PROCESS FOR ITS PREPARATION AND APPLICATION

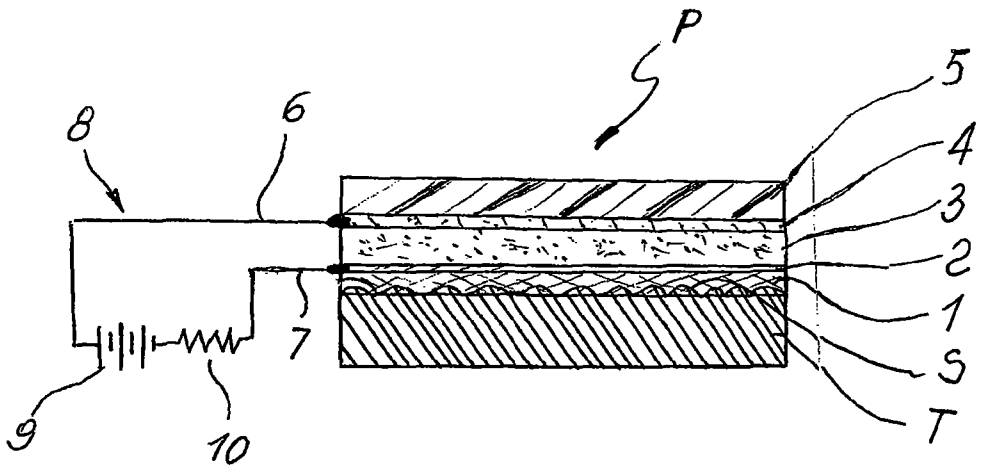

(57) Abstract: A multilayer photovoltaic compound to be applied to outer surfaces of any movable and/or stationary support for absorption and conversion of light radiation into electrical energy comprising, in the following order, at least one first layer (1) designed to adhere to the surface (S) of the support (T), at least one second layer (2) of an electrically conductive material which defines an electrode, at least one third optoelectronically active layer (3) designed to absorb photons and convert them into electrical energy, at least one fourth layer (4) of an electrically conductive material which defines a counter-electrode. The first layer (1) is formed of a substantially homogeneous and continuous base material, which is chemically and mechanically inert to the other layers (2, 3, 4) to define a universal anchoring base adaptable to surfaces of any shape and size. A fifth layer (5) of an optically transparent and electronically inert material may be possibly deposited on the underlying layers (1, 2, 3, 4) to protect and encapsulate them, thereby forming a single hermetically sealed unit.

WO 2008/018030 A3