162162

2002051662 16 Aug 02

(12) INTERNATIONAL APPLICATION PUBLISHED UNDER THE PATENT COOPERATION TREATY (PCT)

(19) World Intellectual Property Organization
International Bureau

(43) International Publication Date
30 August 2001 (30.08.2001)

PCT

(10) International Publication Number
WO 01/62584 A3

(51) International Patent Classification[7]: B63B 21/00

(21) International Application Number: PCT/NZ01/00025

(22) International Filing Date: 26 February 2001 (26.02.2001)

(25) Filing Language: English

(26) Publication Language: English

(30) Priority Data:
501395 26 February 2000 (26.02.2000) NZ

(71) Applicant *(for all designated States except US)*: **MOORING INTERNATIONAL LIMITED** [NZ/NZ]; Unit 6, Amuri Park, 404 Barbadoes Street, Christchurch (NZ).

(72) Inventors; and

(75) Inventors/Applicants *(for US only)*: **MONTGOMERY, Peter, James** [NZ/NZ]; Unit 6, Amuri Park, 404 Barbadoes Street, Christchurch (NZ). **HADCROFT, John, Mackay** [NZ/NZ]; Unit 6, Amuri Park, 404 Barbadoes Street, Christchurch (NZ).

(74) Agents: LEWIS, Mardi, J. et al.; Level 12, KPMG Building, 85 Alexandra Street, Private Bag 3140, Hamilton (NZ).

(81) Designated States *(national)*: AE, AG, AL, AM, AT, AU, AZ, BA, BB, BG, BR, BY, BZ, CA, CH, CN, CR, CU, CZ, DE, DK, DM, DZ, EE, ES, FI, GB, GD, GE, GH, GM, HR, HU, ID, IL, IN, IS, JP, KE, KG, KP, KR, KZ, LC, LK, LR, LS, LT, LU, LV, MA, MD, MG, MK, MN, MW, MX, MZ, NO, NZ, PL, PT, RO, RU, SD, SE, SG, SI, SK, SL, TJ, TM, TR, TT, TZ, UA, UG, US, UZ, VN, YU, ZA, ZW.

(84) Designated States *(regional)*: ARIPO patent (GH, GM, KE, LS, MW, MZ, SD, SL, SZ, TZ, UG, ZW), Eurasian patent (AM, AZ, BY, KG, KZ, MD, RU, TJ, TM), European patent (AT, BE, CH, CY, DE, DK, ES, FI, FR, GB, GR, IE, IT, LU, MC, NL, PT, SE, TR), OAPI patent (BF, BJ, CF, CG, CI, CM, GA, GN, GW, ML, MR, NE, SN, TD, TG).

Published:
— *with international search report*

(88) Date of publication of the international search report:
3 January 2002

[Continued on next page]

(54) Title: SEAL FOR A SUCTION CUP AND METHOD FOR ACCOMMODATING LARGE MOVEMENTS IN A MOORING SYSTEM

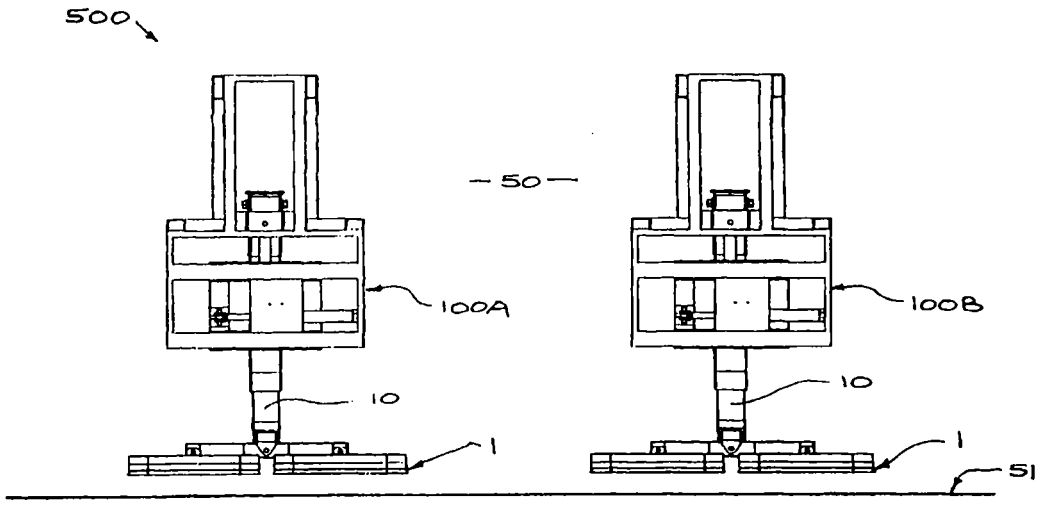

(57) Abstract: A method of operating a mooring system (500) exemplified by active mooring devices (100) having attractive attachment elements (1) fixable to a ship's hull (51) is described. Each mooring device (100) includes active means for moving the attachment element (1) vertically and in the horizontal plane, and the method involves repositioning the attachment elements (1) in a stepwise manner. Also disclosed is a seal (60) for a vaccum attachment element (1).

WO 01/62584 A3

ACTION

For two-letter codes and other abbreviations, refer to the "Guidance Notes on Codes and Abbreviations" appearing at the beginning of each regular issue of the PCT Gazette.