FIG. 1A

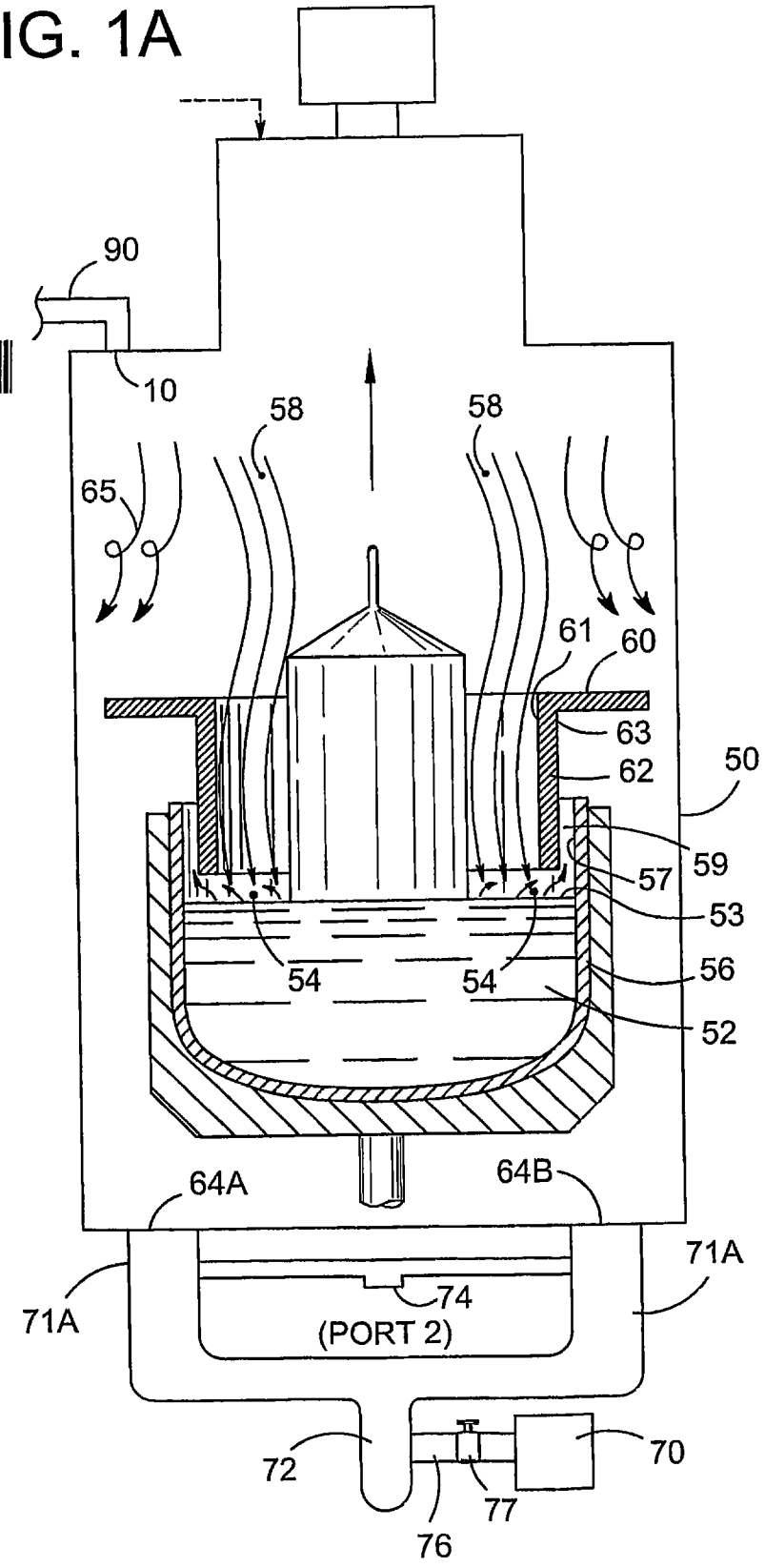

G00002

103103

FIG. 1B

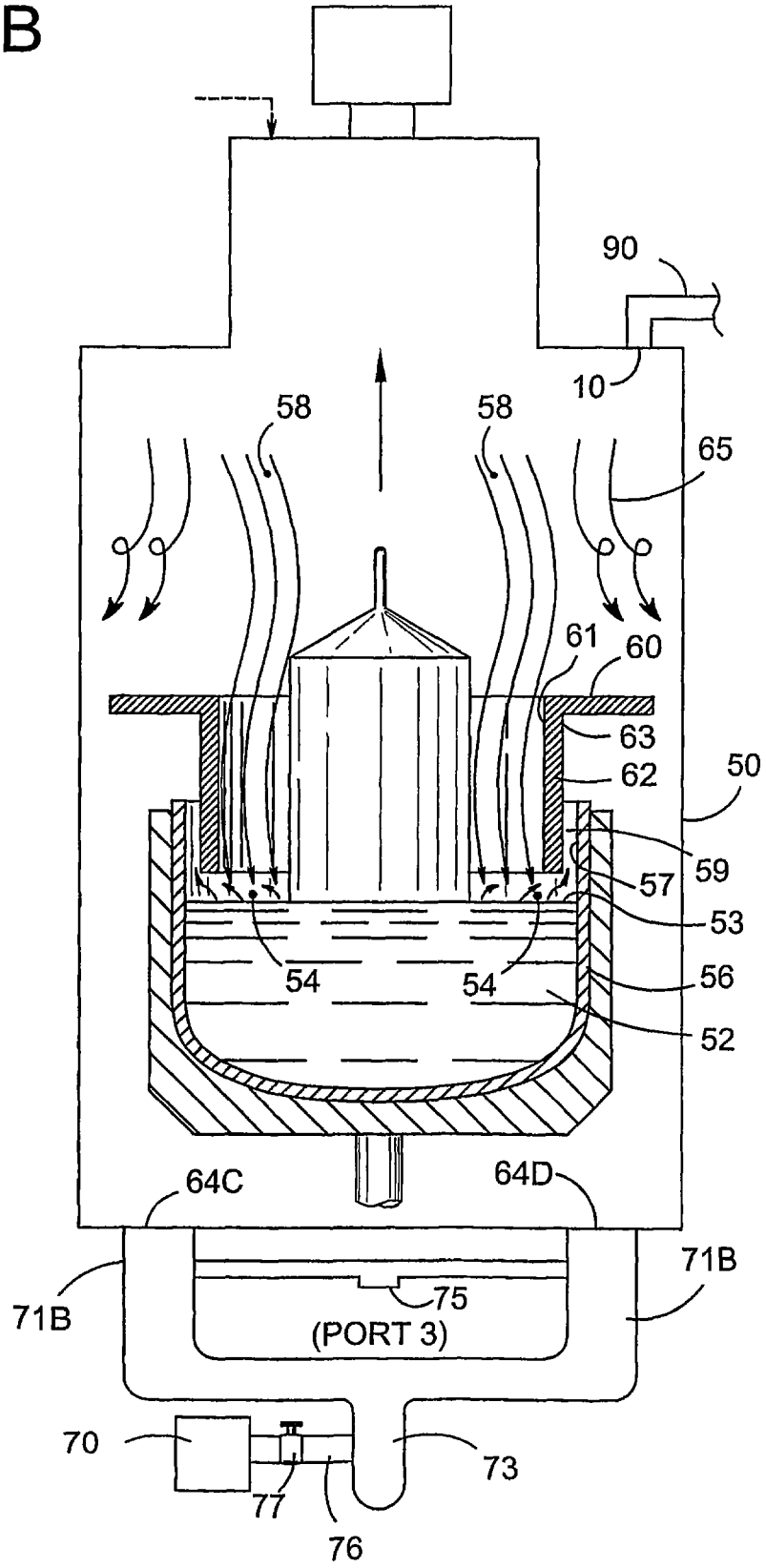
90
10
58
58
65
61
60
63
62
50
59
57
53
54
54
56
52
64C
64D
71B
71B
75
(PORT 3)
70
73
77
76

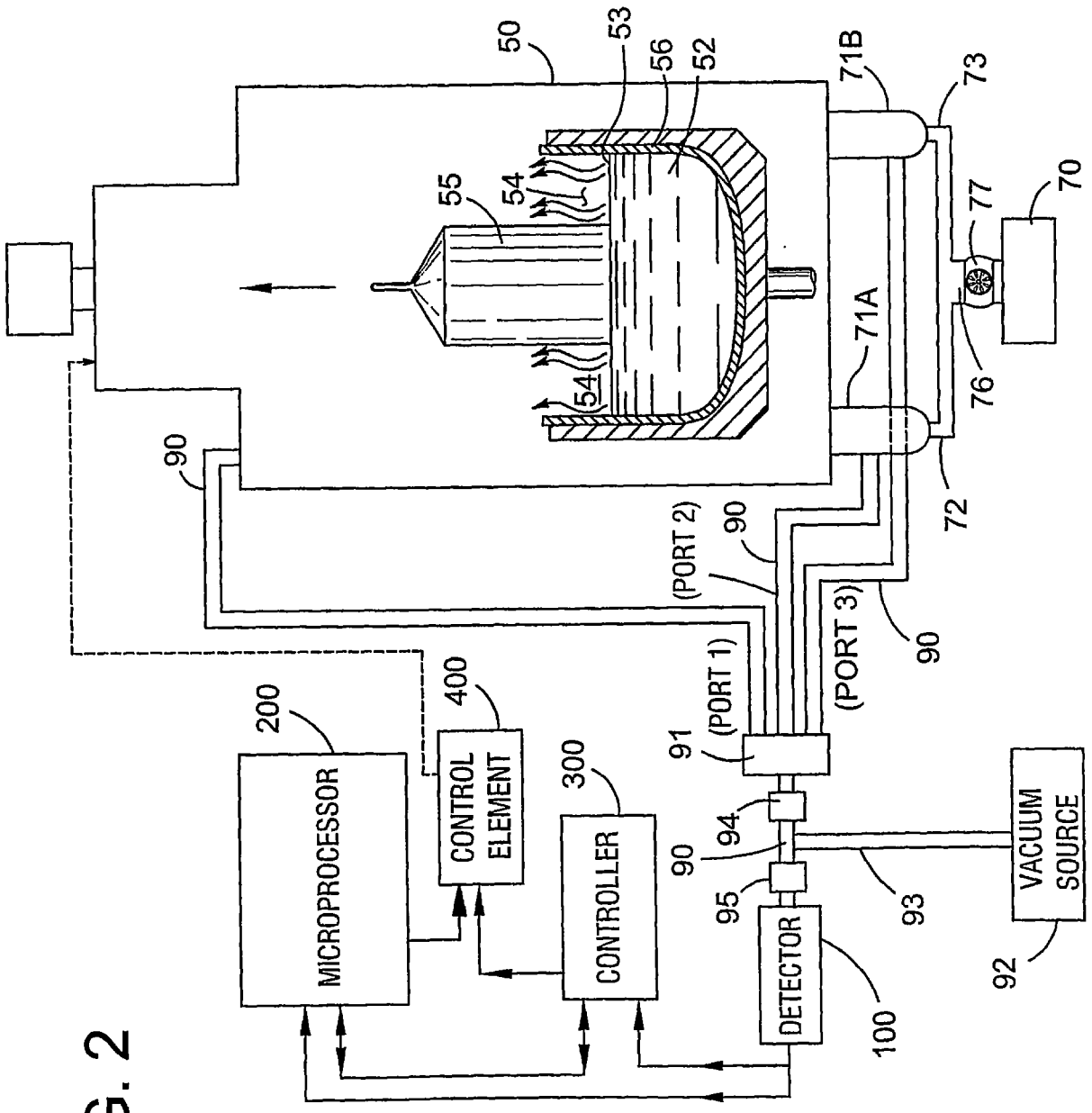
50
53
56
52
71B
73
55
54
54
77
70
71A
76
90
72
(PORT 2)
90
(PORT 3)
90
200
400
MICROPROCESSOR
CONTROL ELEMENT
300
CONTROLLER
91
(PORT 1)
90
94
95
DETECTOR
100
93
VACUUM SOURCE
92

FIG. 2

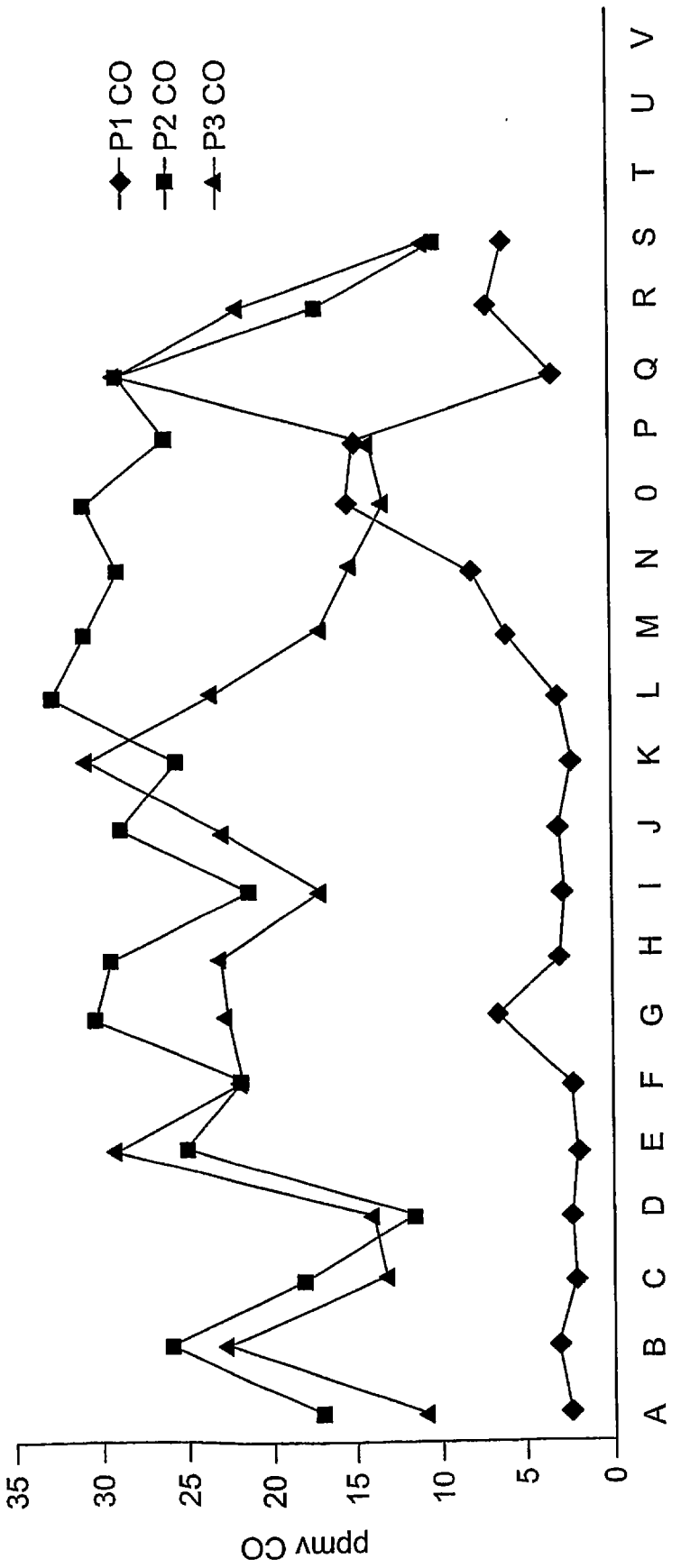
P1 CO
P2 CO
P3 CO
ppmv CO
0
5
10
15
20
25
30
35
A B C D E F G H I J K L M N O P Q R S T U V

FIG. 3

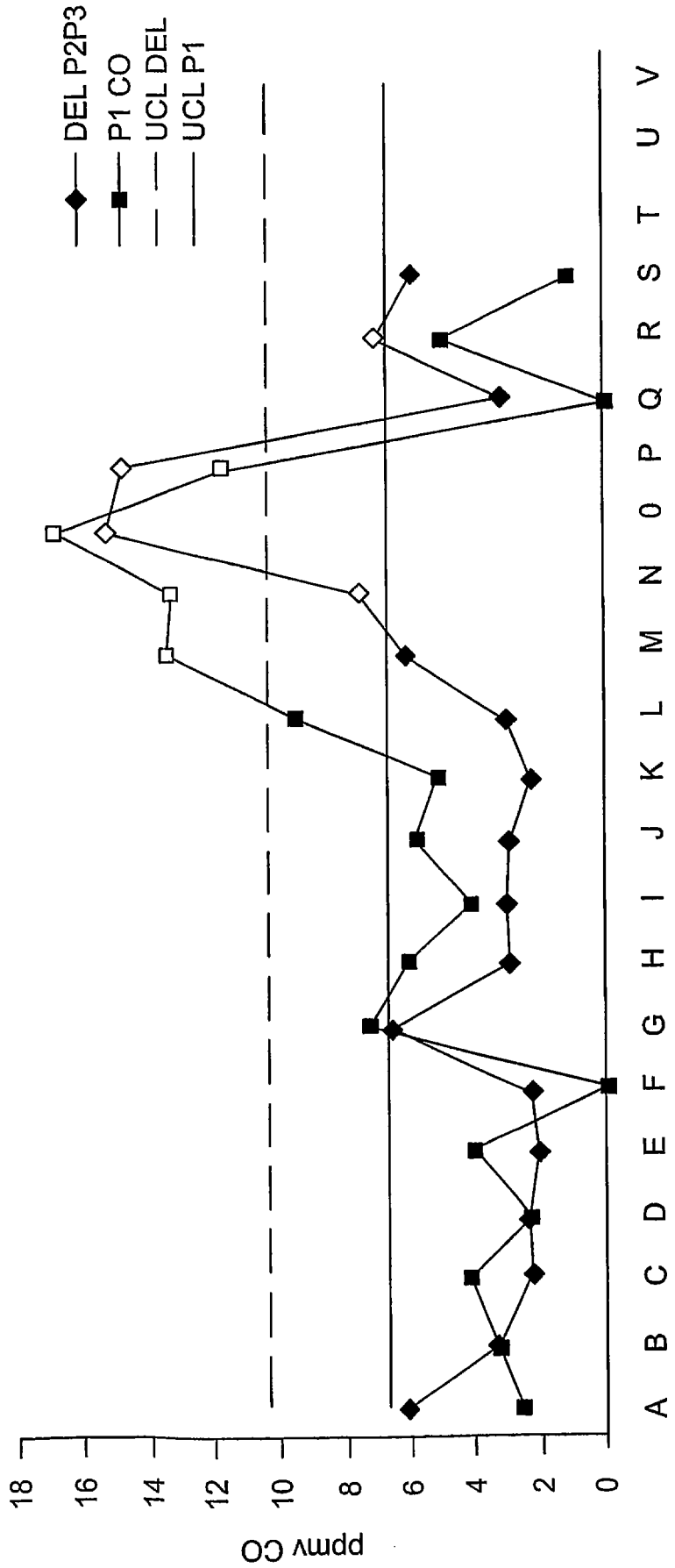
DEL P2P3
P1 CO
UCL DEL
UCL P1
ppmv CO
0
2
4
6
8
10
12
14
16
18
A B C D E F G H I J K L M N O P Q R S T U V

FIG. 4

FIG. 5

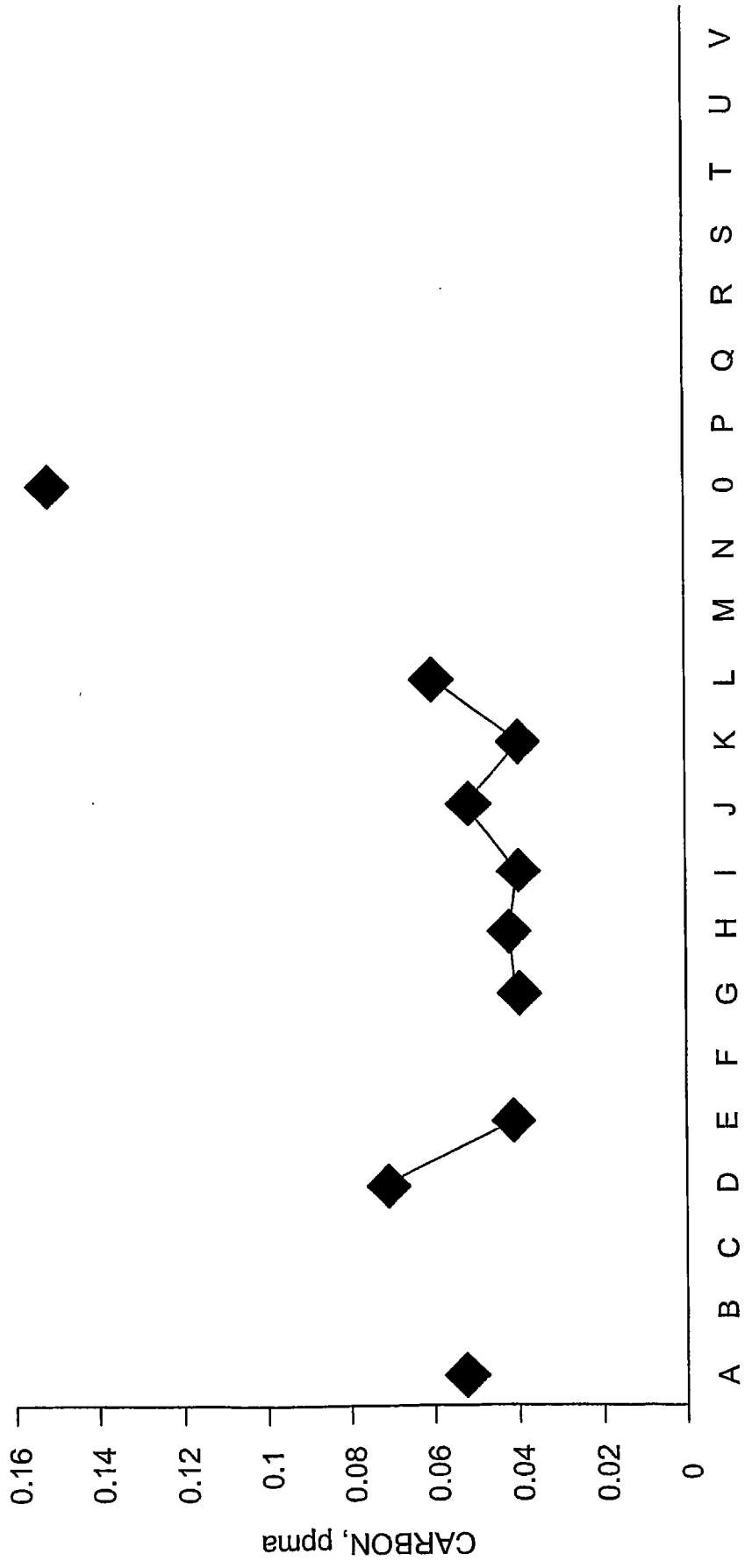
CARBON, ppma
0.16
0.14
0.12
0.1
0.08
0.06
0.04
0.02
0
A B C D E F G H I J K L M N O P Q R S T U V

FIG. 6

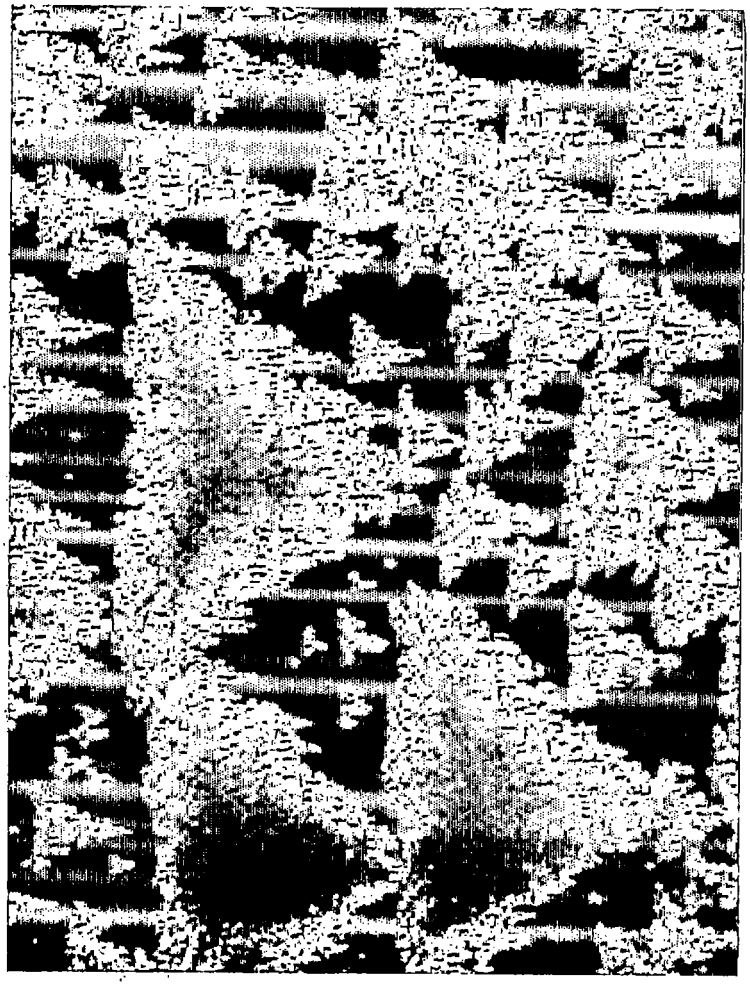

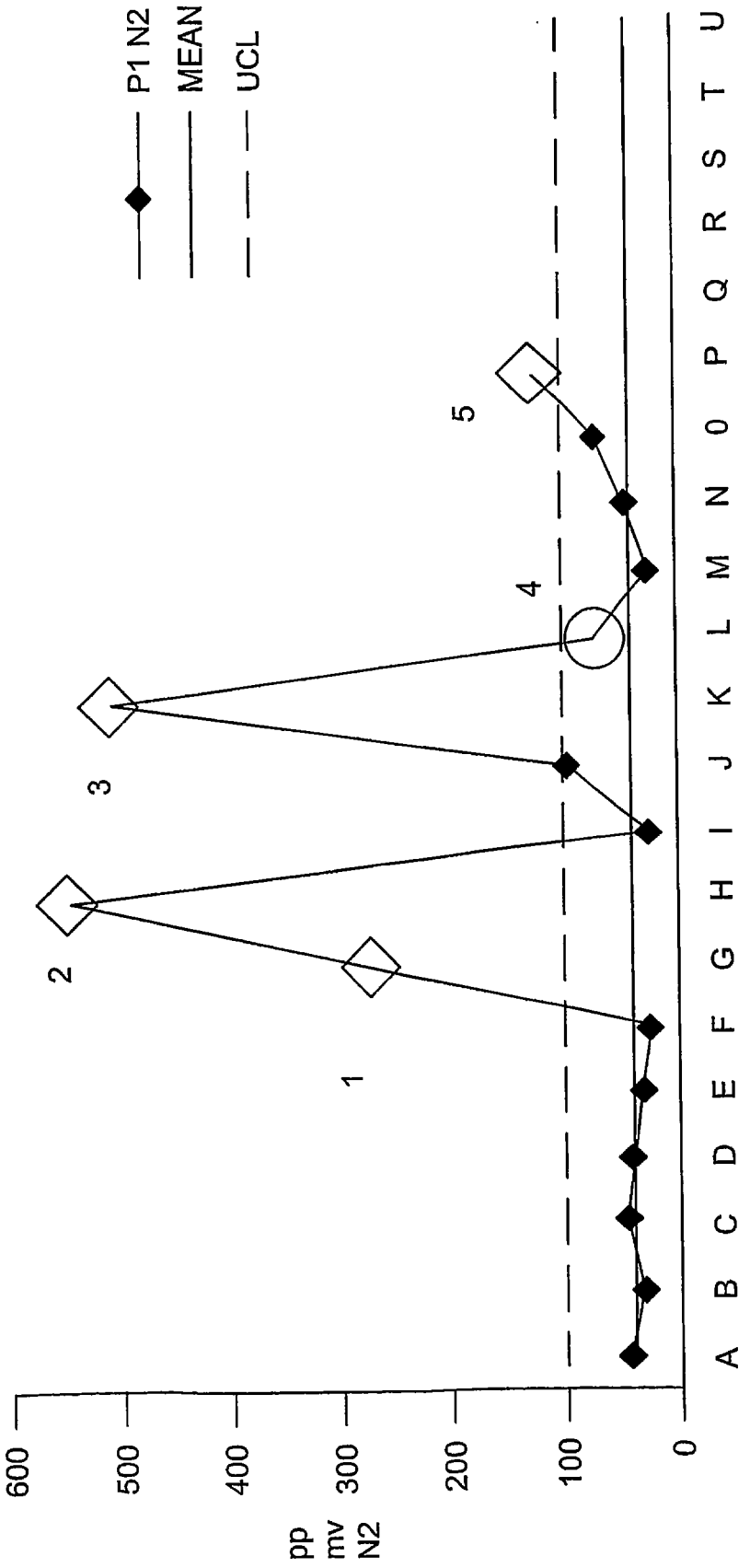
P1 N2
MEAN
UCL
pp mv N2
600
500
400
300
200
100
0
A B C D E F G H I J K L M N O P Q R S T U
1
2
3
4
5

FIG. 7

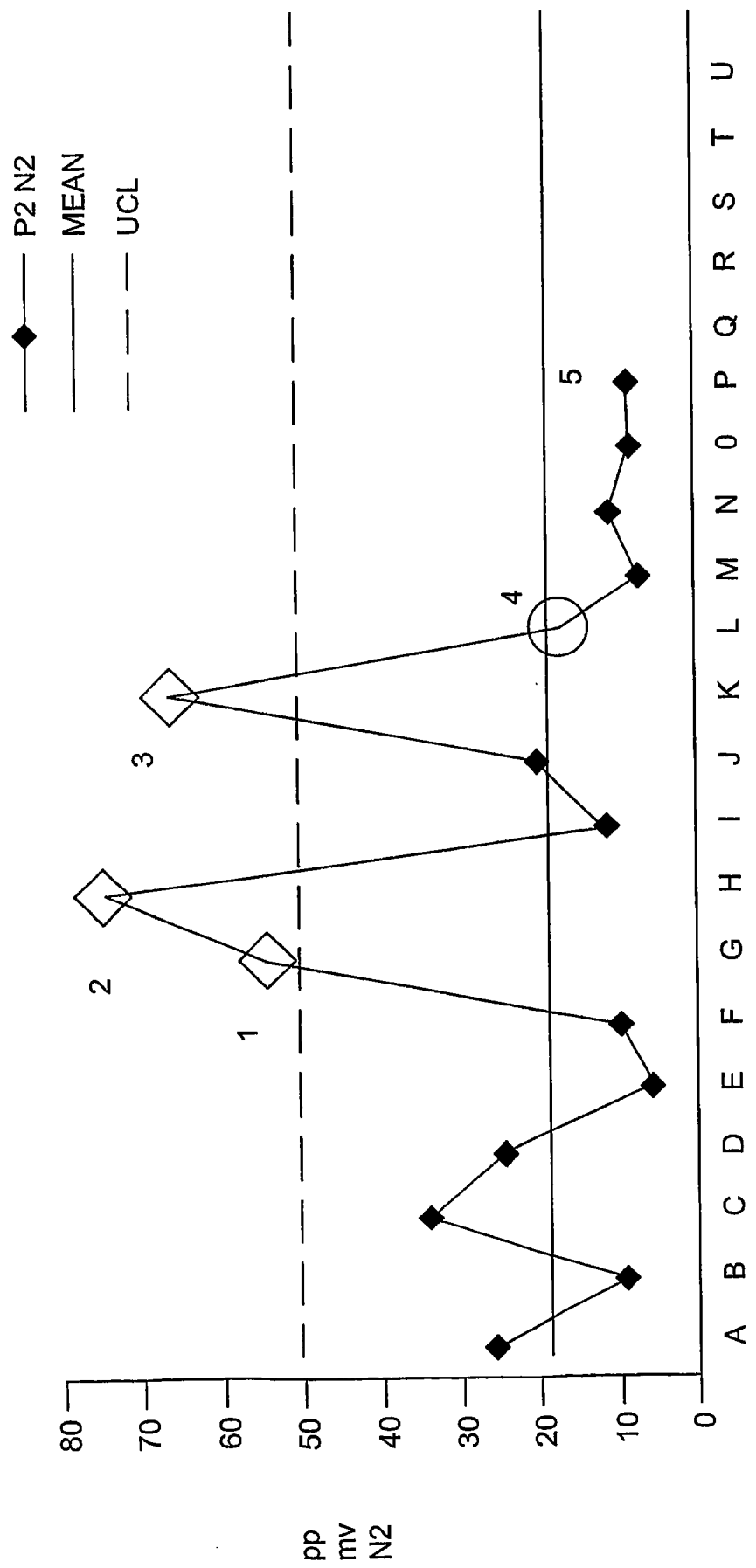
P2 N2
MEAN
UCL
pp mv N2
80
70
60
50
40
30
20
10
0
A B C D E F G H I J K L M N O P Q R S T U
1
2
3
4
5

FIG. 8

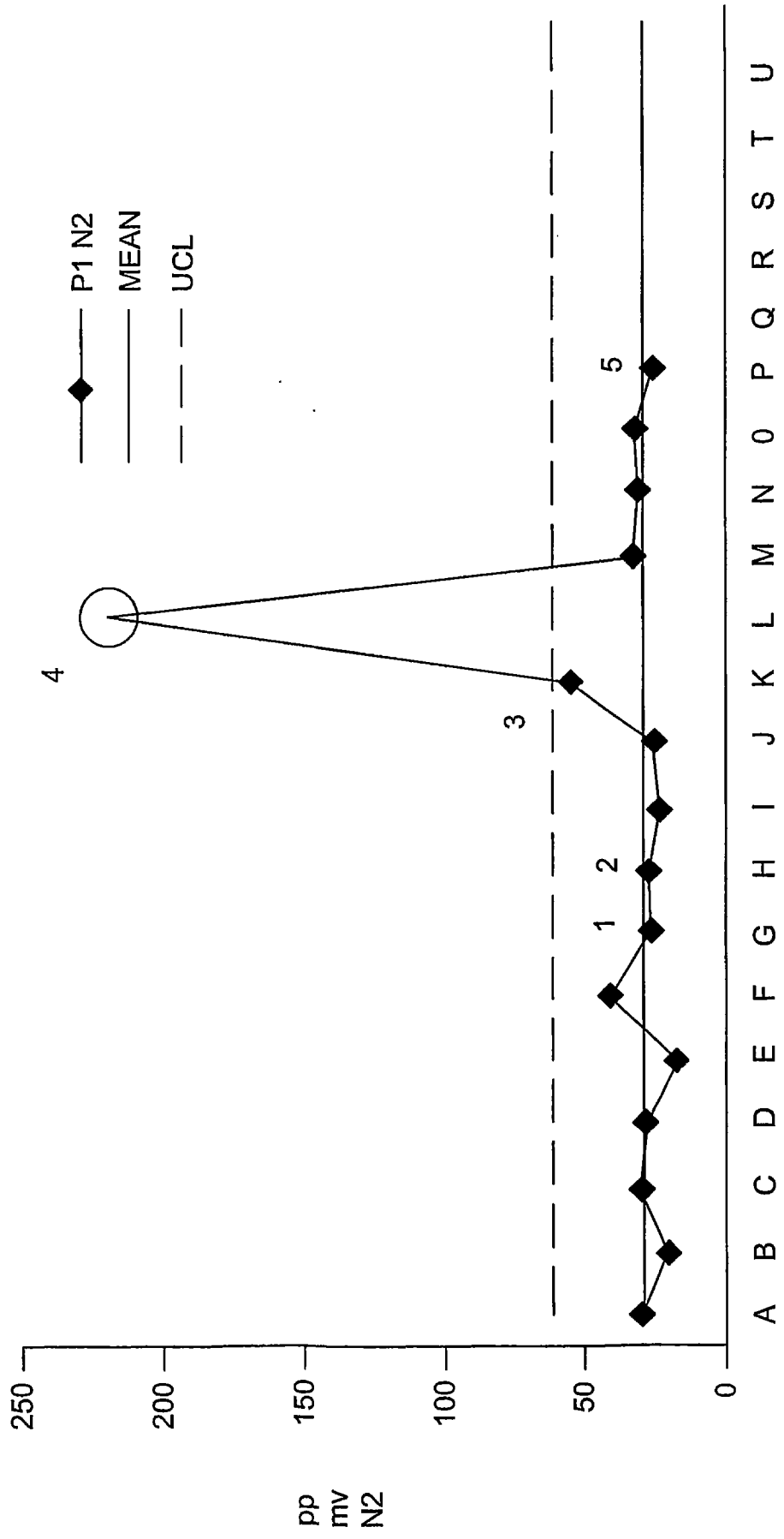
P1 N2
MEAN
UCL
1
2
3
4
5
A B C D E F G H I J K L M N O P Q R S T U
250
200
150
100
50
0
pp mv N2

FIG. 9

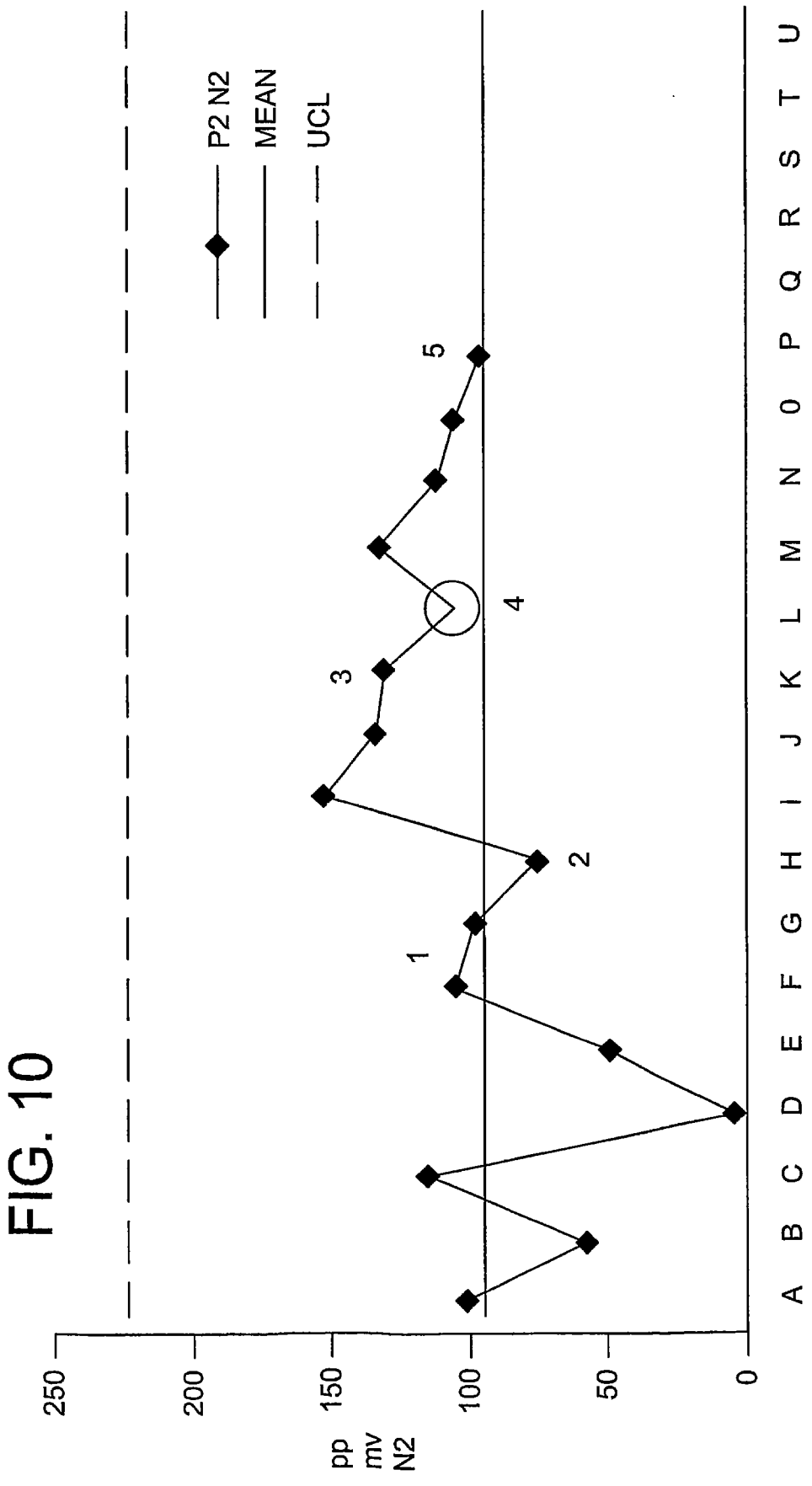
P2 N2
MEAN
UCL
pp mV N2
250
200
150
100
50
0
A B C D E F G H I J K L M N O P Q R S T U
1
2
3
4
5

FIG. 10