FIG.1

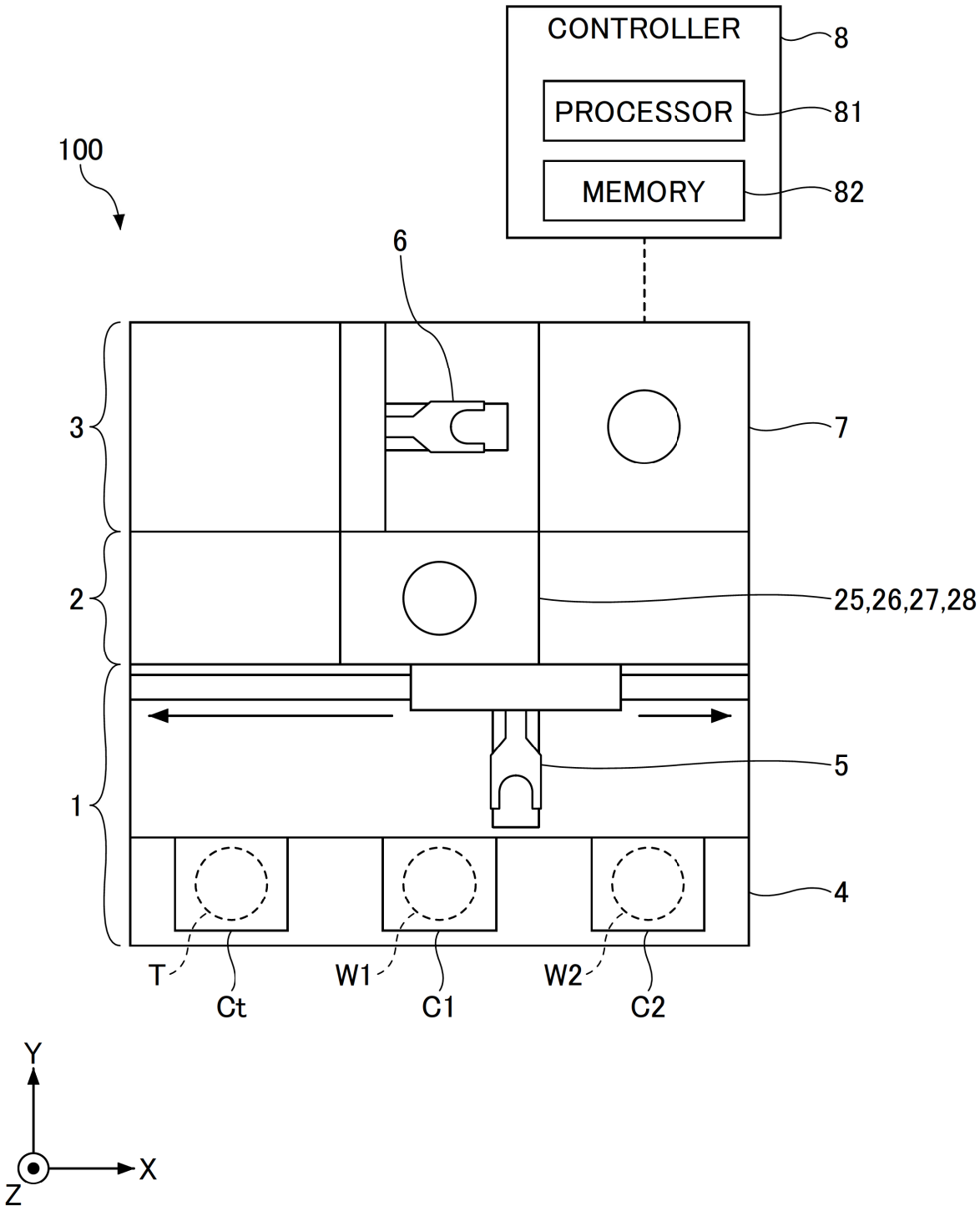
CONTROLLER
8
PROCESSOR
81
MEMORY
82
100
6
3
7
2
25,26,27,28
5
1
4
T
Ct
W1
C1
W2
C2
Y
X
Z

FIG.2

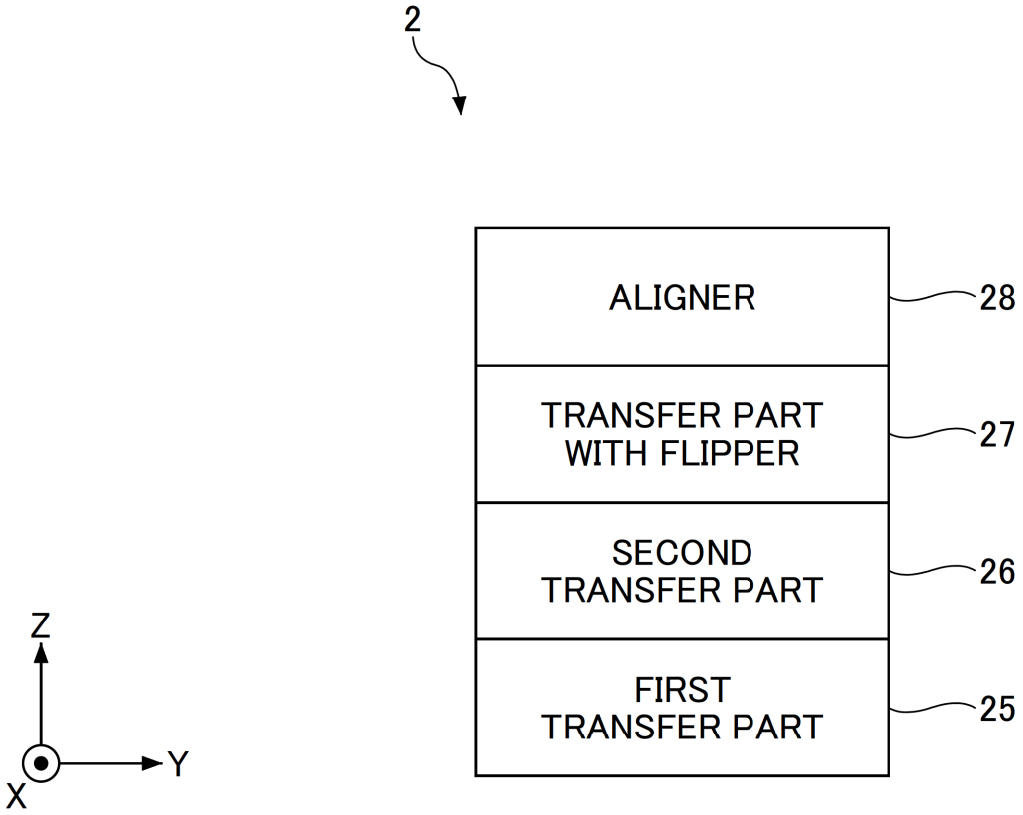
2
ALIGNER
28
TRANSFER PART WITH FLIPPER
27
SECOND TRANSFER PART
26
FIRST TRANSFER PART
25
Z
Y
X

FIG.3

(A)

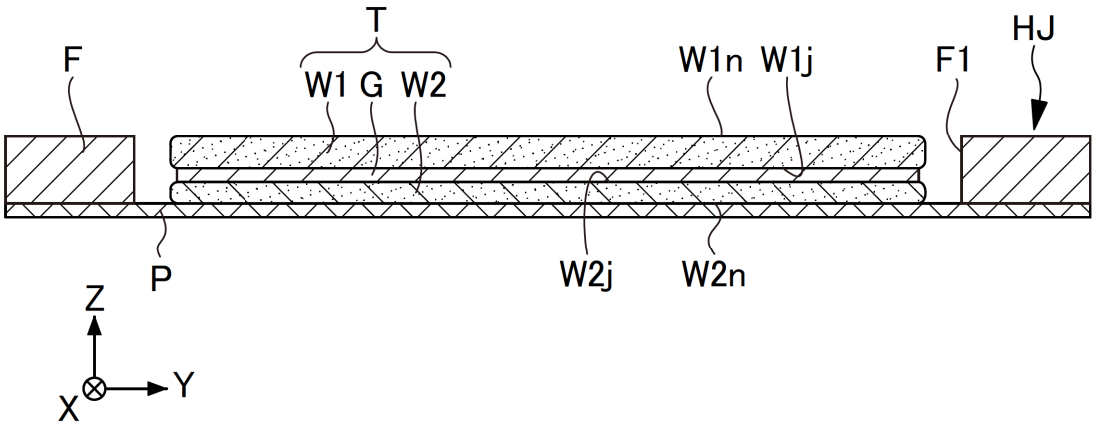

(B)

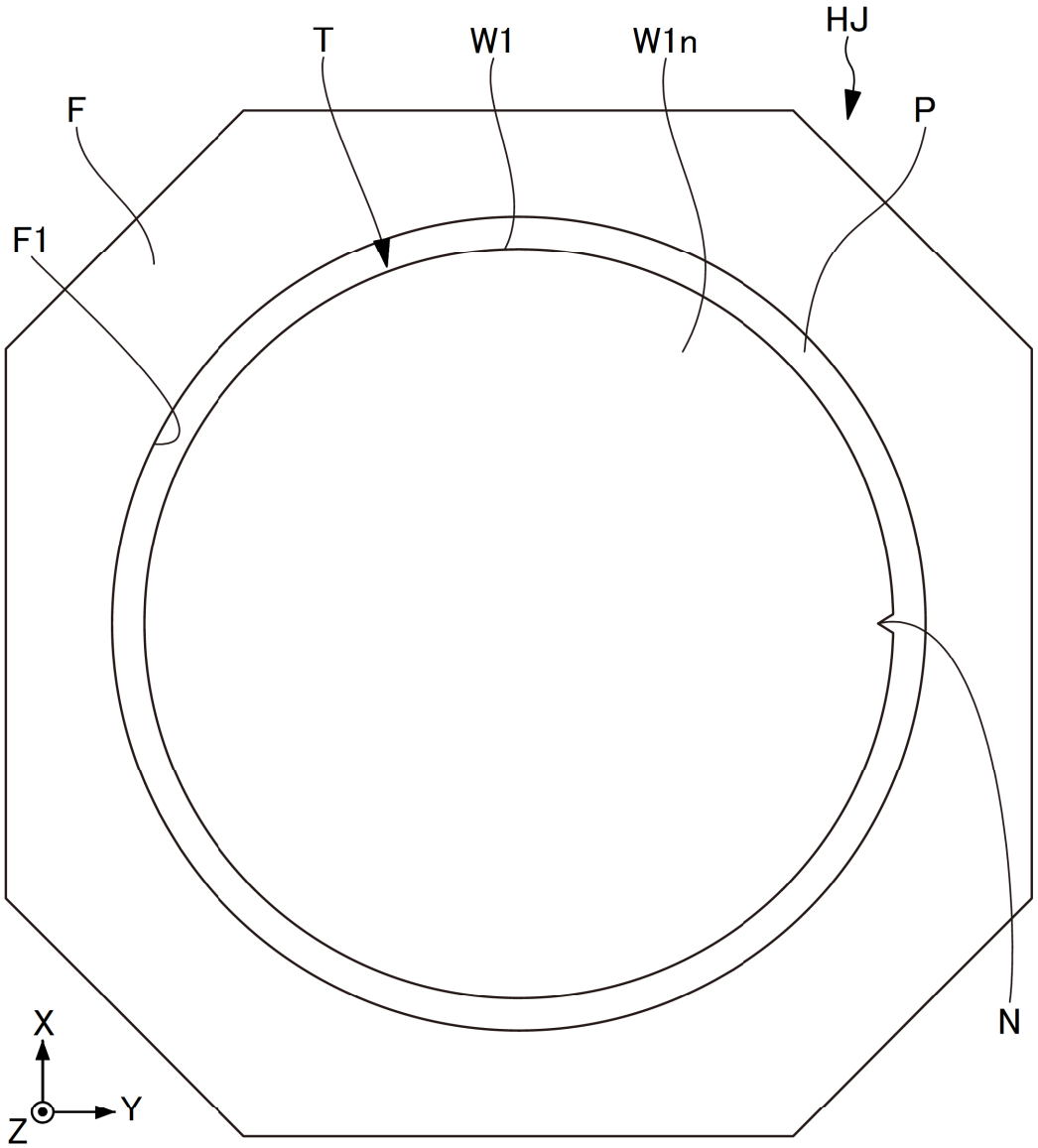

FIG.4

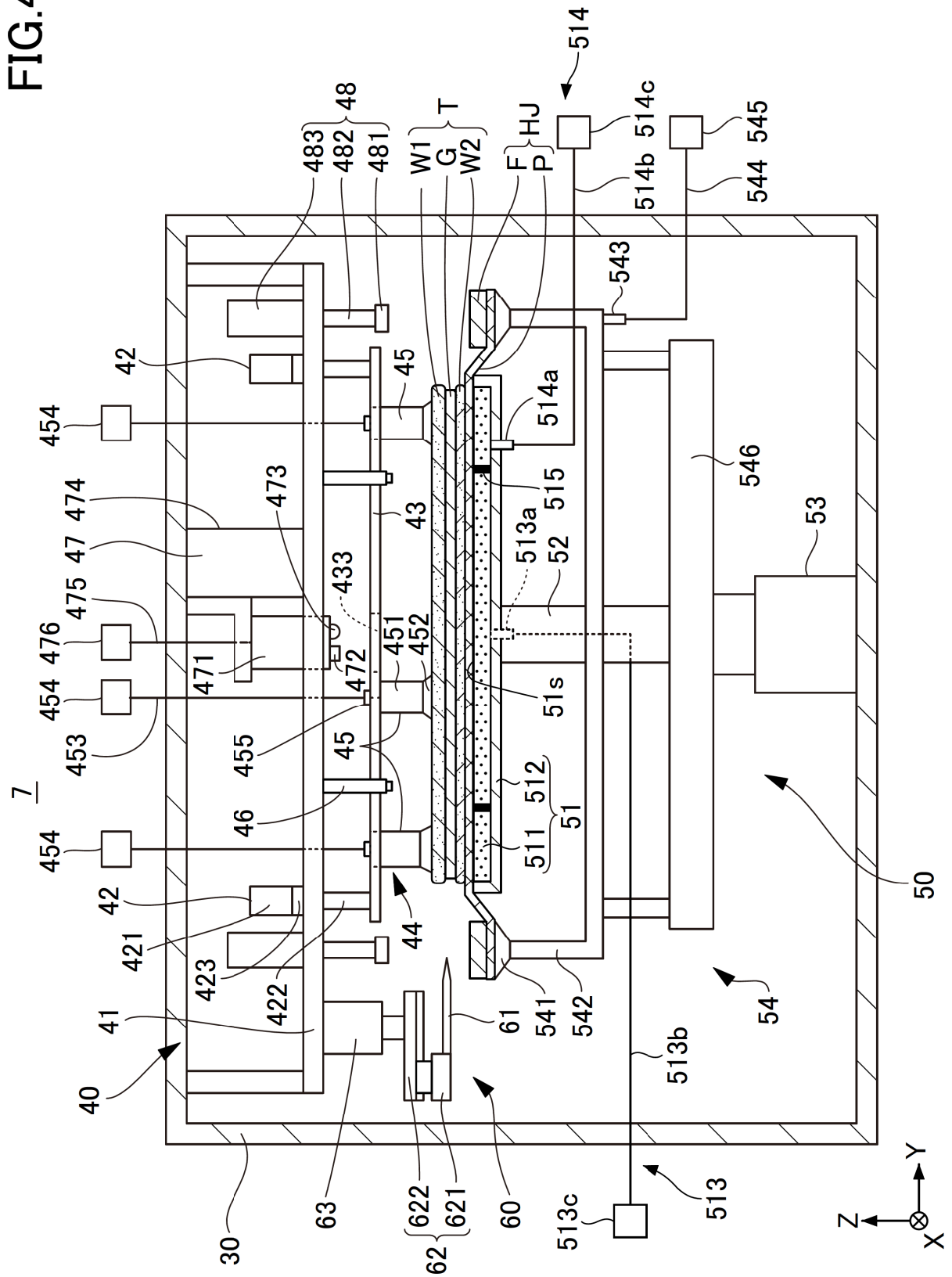
7
30
40
41
42
421
422
423
43
44
45
46
47
474
475
476
453
454
455
471
472
473
433
451
452
48
481
482
483
W1
G
W2
T
F
P
HJ
514
514a
514b
514c
515
513a
513b
513c
513
51
51s
511
512
52
53
54
50
541
542
543
544
545
546
60
61
62
621
622
63
Z
Y
X

FIG.5

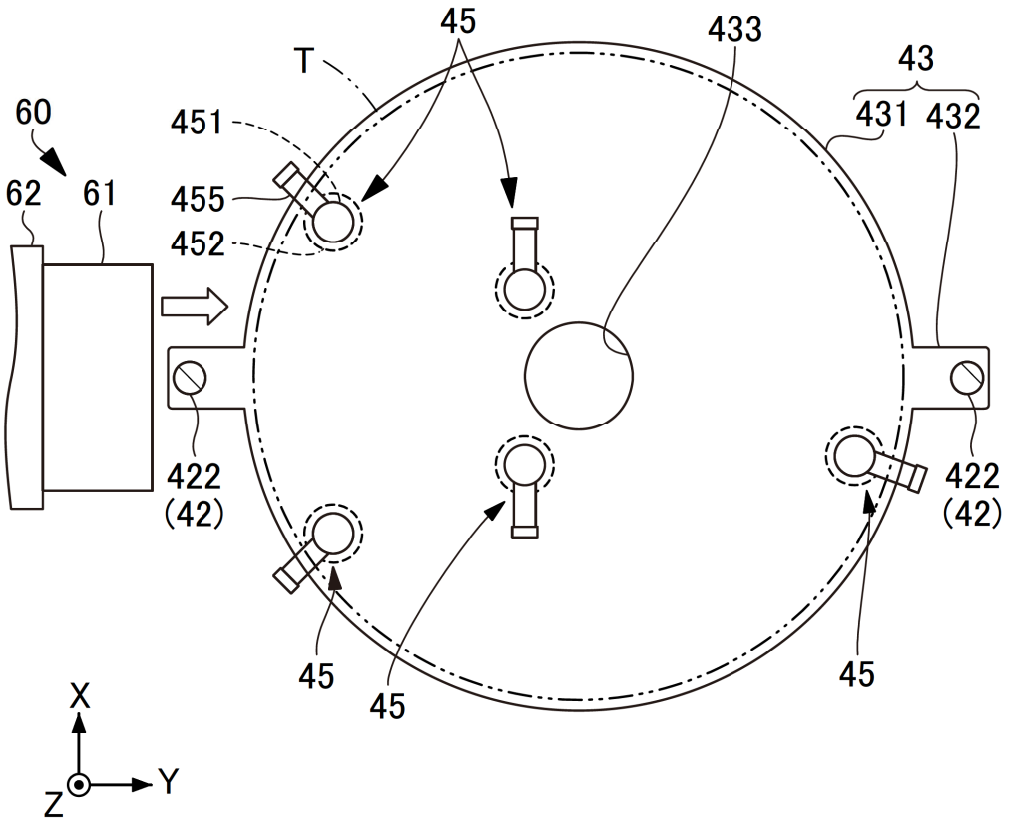

FIG.6

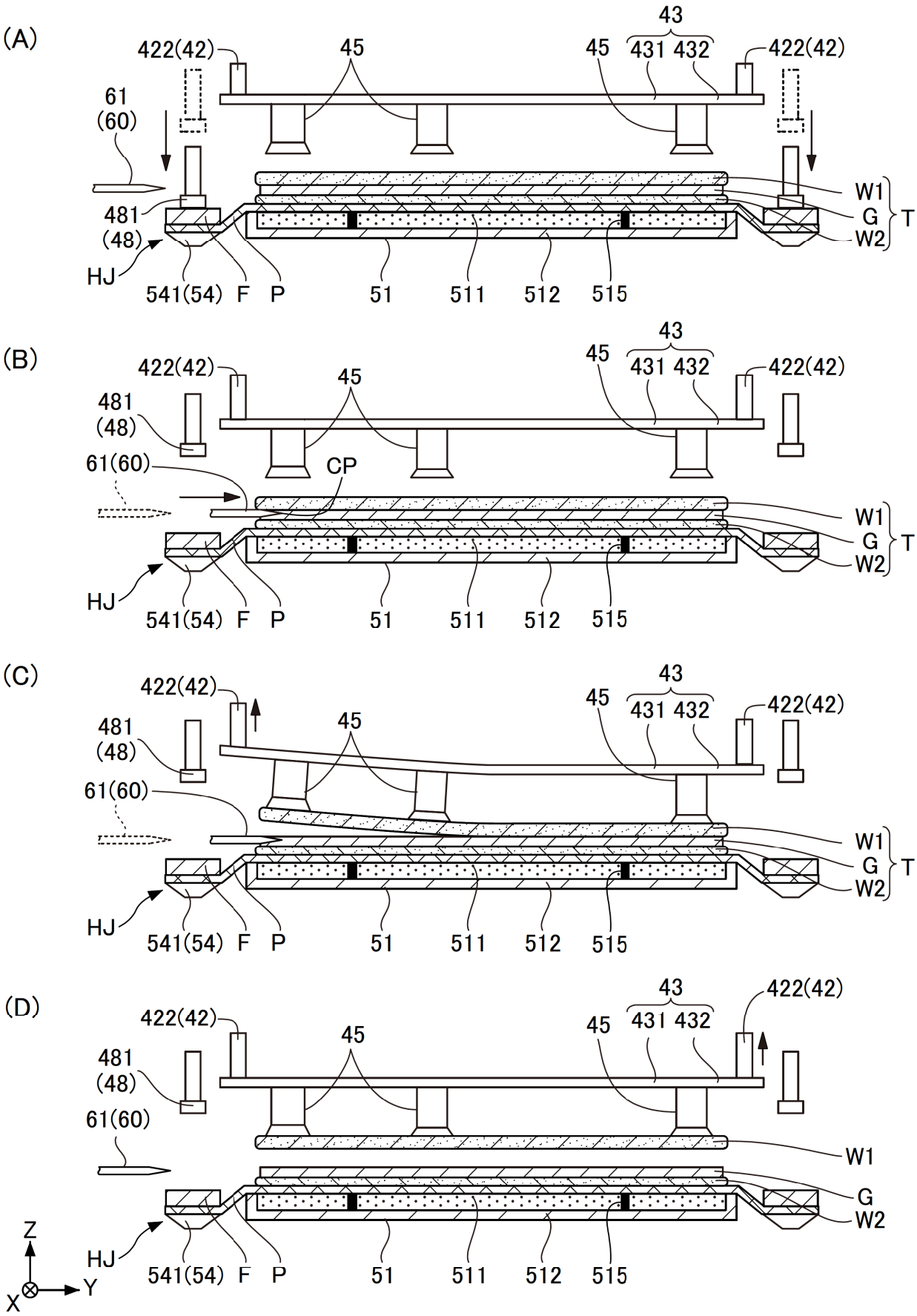
(A)
422(42)
45
43
431 432
45
422(42)
61
(60)
481
(48)
HJ
541(54)
F
P
51
511
512
515
W1
G
W2
T
(B)
422(42)
45
43
431 432
45
422(42)
481
(48)
61(60)
CP
HJ
541(54)
F
P
51
511
512
515
W1
G
W2
T
(C)
422(42)
45
43
431 432
45
422(42)
481
(48)
61(60)
HJ
541(54)
F
P
51
511
512
515
W1
G
W2
T
(D)
422(42)
45
43
431 432
45
422(42)
481
(48)
61(60)
HJ
541(54)
F
P
51
511
512
515
W1
G
W2
Z
Y
X

FIG.7

(A)

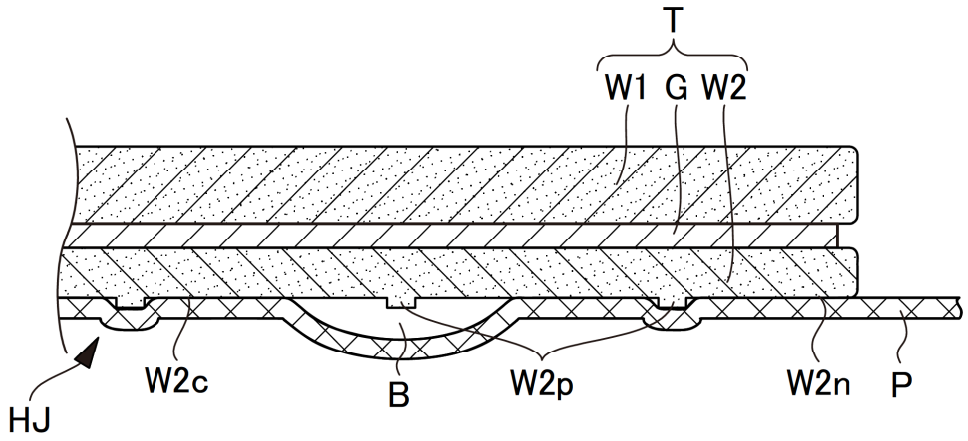

(B)

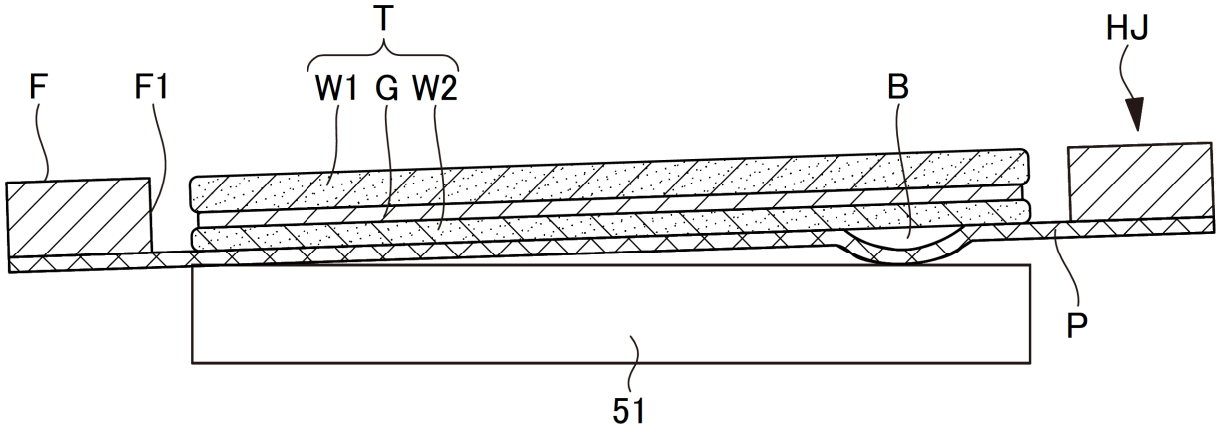

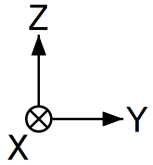

FIG.8

(A)

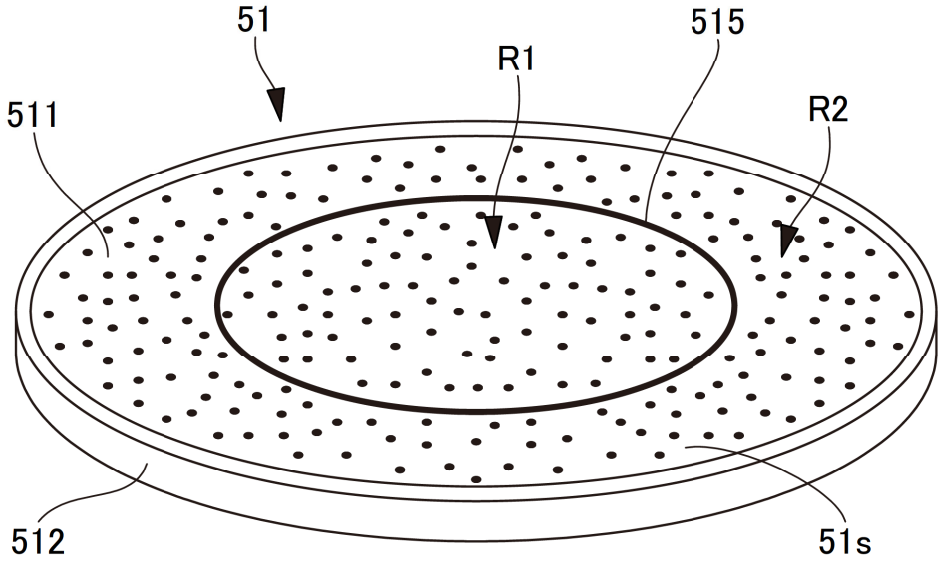
51
515
R1
511
R2
512
51s

(B)

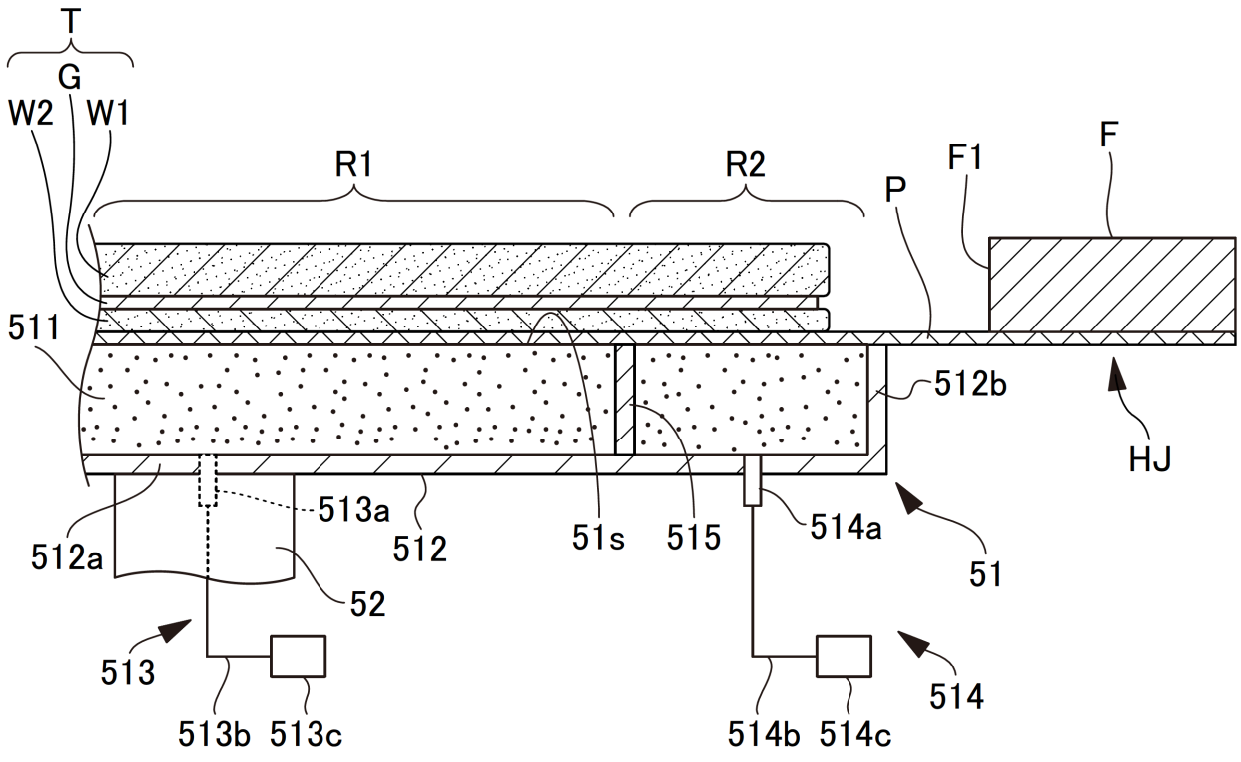
T
G
W2
W1
R1
R2
P
F1
F
511
512b
HJ
513a
512
51s
515
514a
512a
51
52
513
514
513b
513c
514b
514c

FIG.9

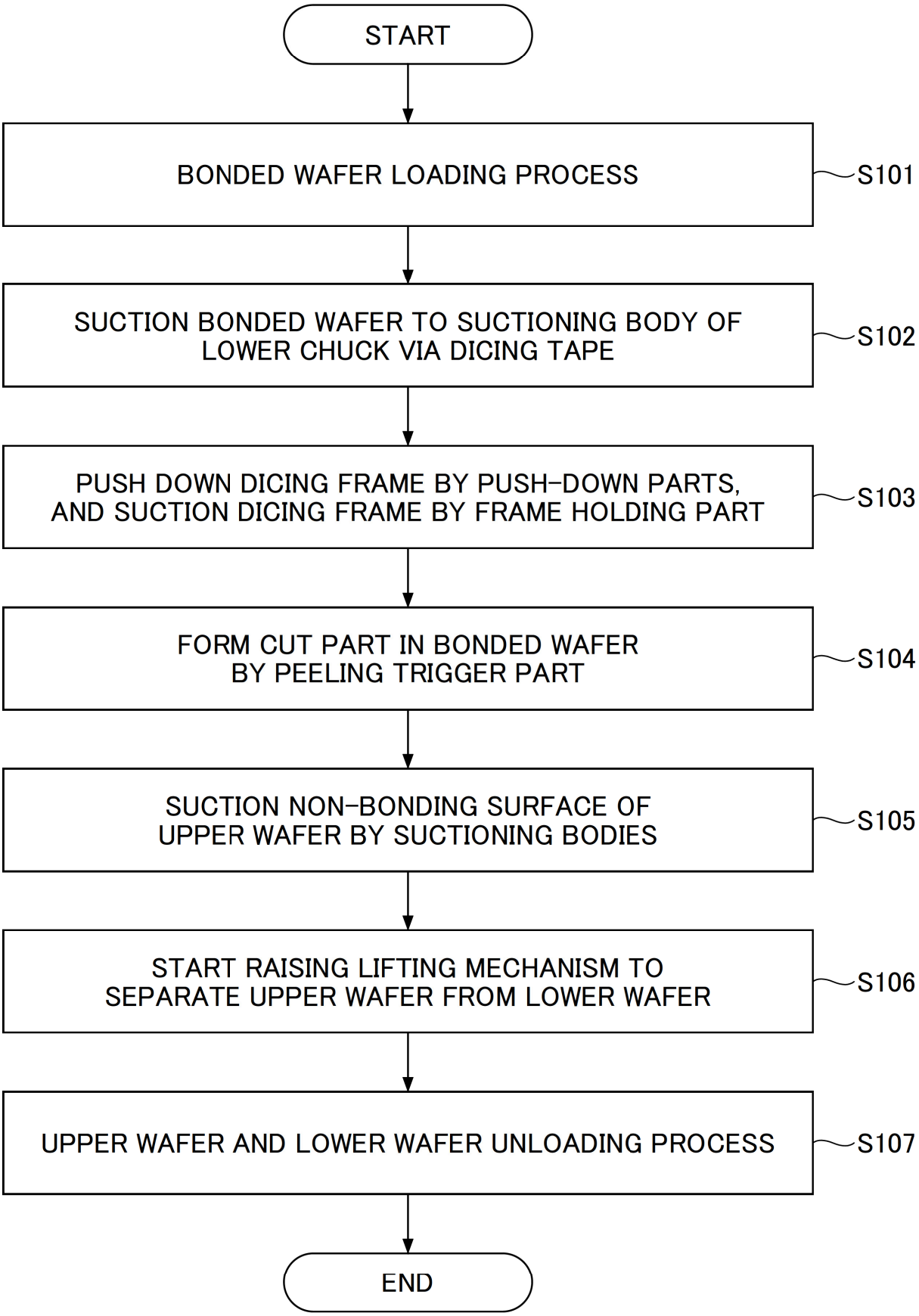
START
BONDED WAFER LOADING PROCESS
S101
SUCTION BONDED WAFER TO SUCTIONING BODY OF LOWER CHUCK VIA DICING TAPE
S102
PUSH DOWN DICING FRAME BY PUSH-DOWN PARTS, AND SUCTION DICING FRAME BY FRAME HOLDING PART
S103
FORM CUT PART IN BONDED WAFER BY PEELING TRIGGER PART
S104
SUCTION NON-BONDING SURFACE OF UPPER WAFER BY SUCTIONING BODIES
S105
START RAISING LIFTING MECHANISM TO SEPARATE UPPER WAFER FROM LOWER WAFER
S106
UPPER WAFER AND LOWER WAFER UNLOADING PROCESS
S107
END

FIG.10

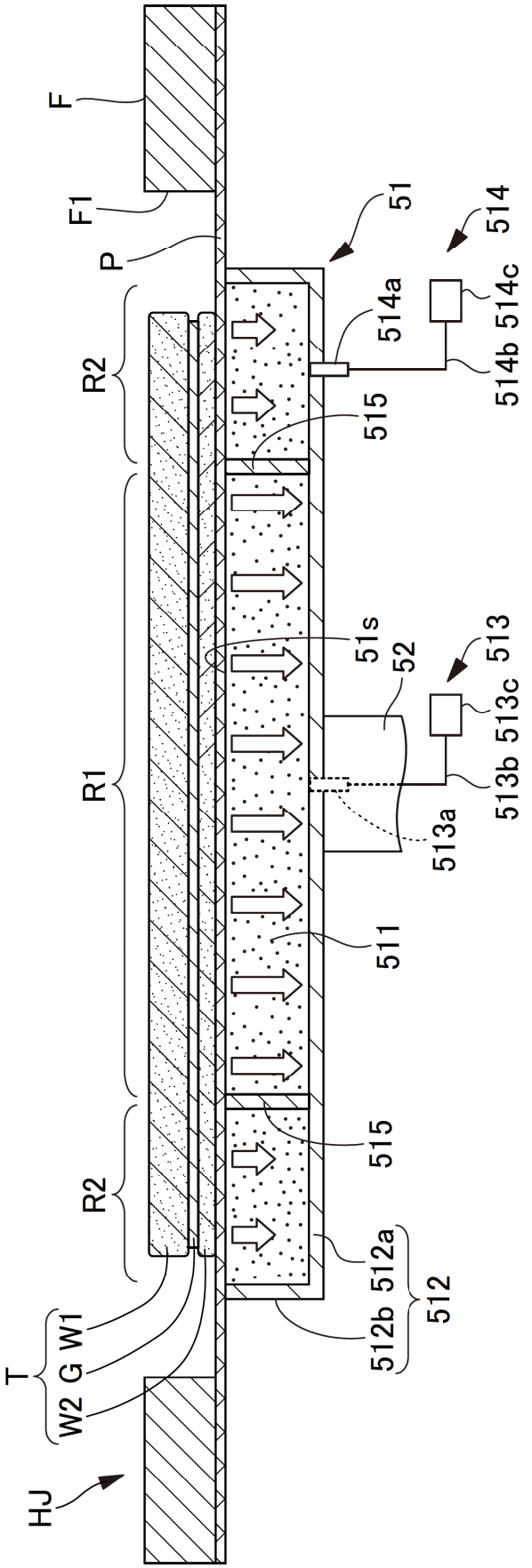
F
F1
P
R2
R1
R2
T
W2
G
W1
HJ
51
514
514a
514c
514b
515
51s
52
513
513c
513b
513a
511
515
512a
512b
512

FIG.11

(A)

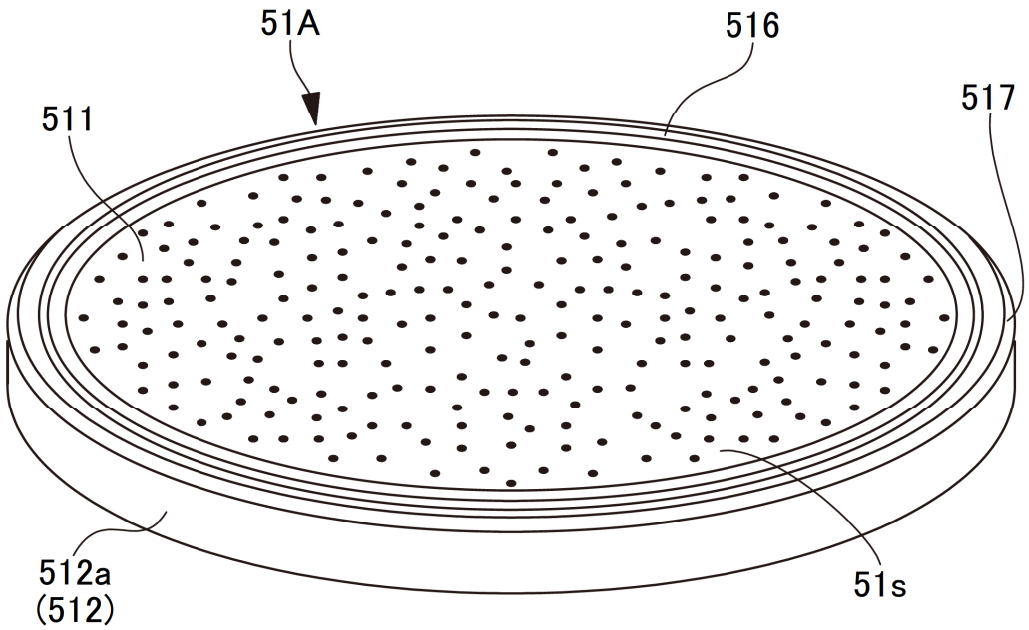
51A
516
517
511
512a
(512)
51s

(B)

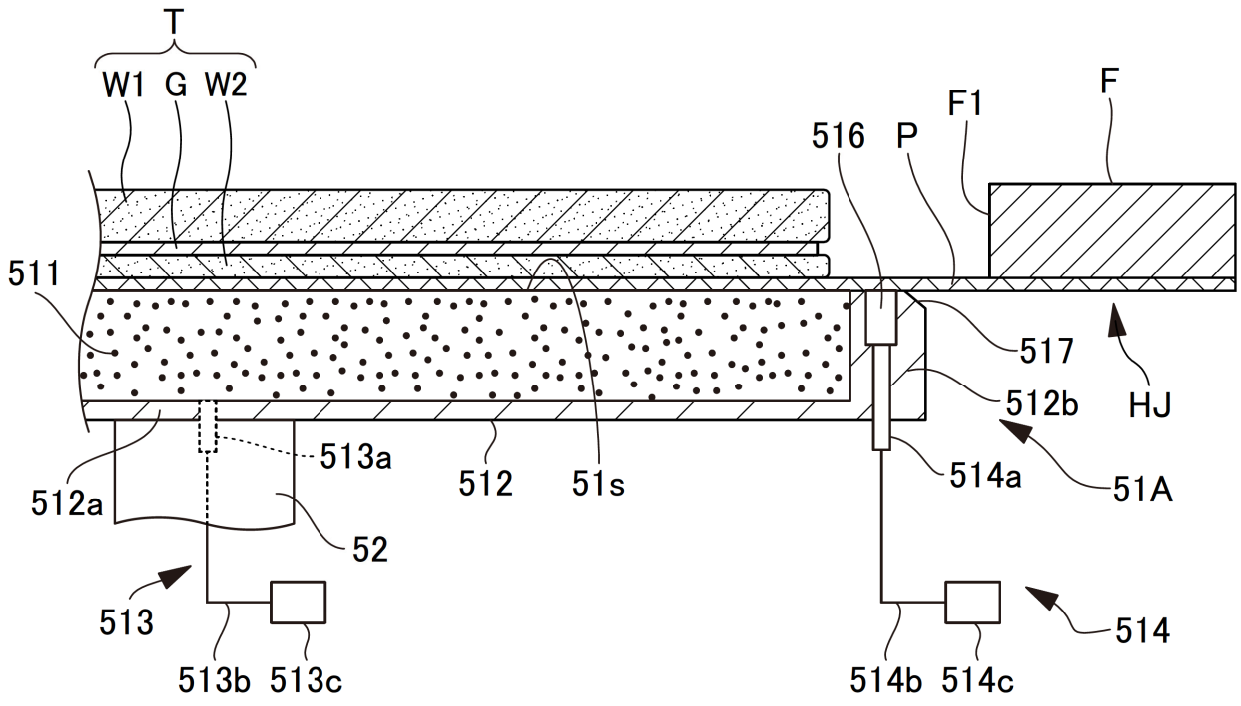
T
W1
G
W2
F1
F
516
P
511
517
512b
HJ
513a
512
51s
514a
51A
512a
52
513
514
513b
513c
514b
514c

FIG.12

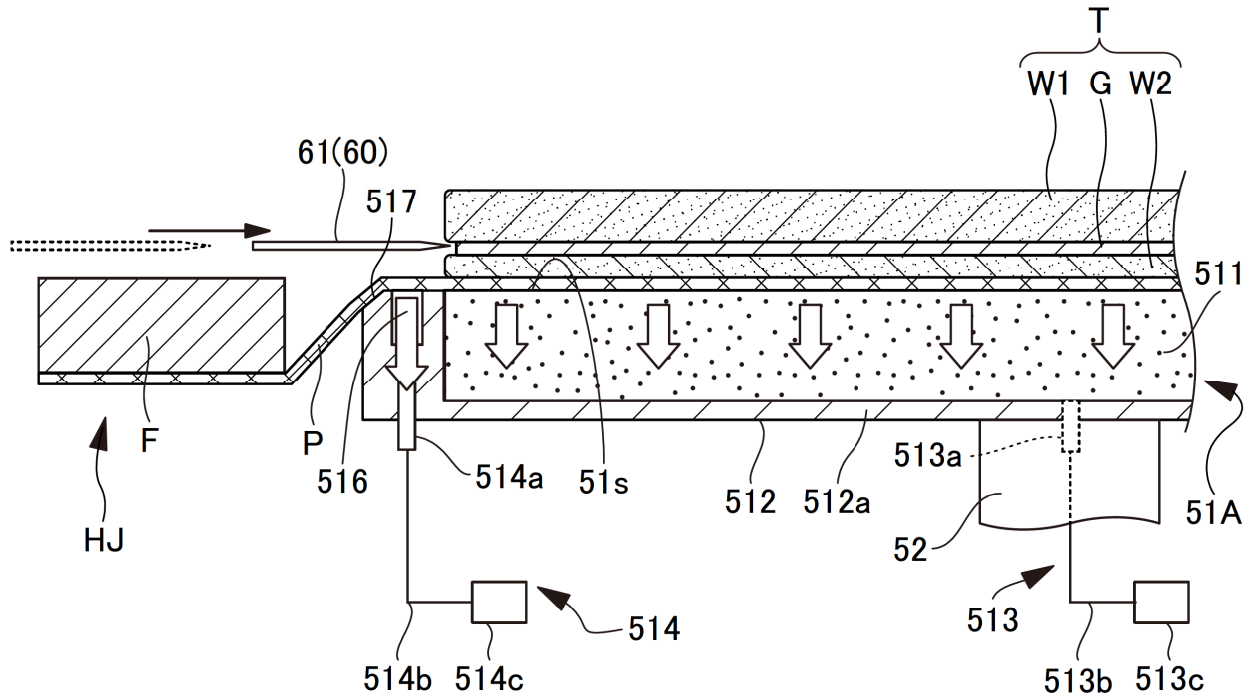
T
W1
G
W2
61(60)
517
511
F
P
516
514a
51s
512
512a
513a
51A
HJ
52
514
513
514b
514c
513b
513c