(12) INTERNATIONAL APPLICATION PUBLISHED UNDER THE PATENT COOPERATION TREATY (PCT)

(19) World Intellectual Property Organization
International Bureau

(43) International Publication Date
12 February 2009 (12.02.2009)

PCT

(10) International Publication Number
WO 2009/018599 A1

(51) International Patent Classification:
F04F 1/02 (2006.01) *F04F 5/24* (2006.01)
F04F 5/20 (2006.01)

(21) International Application Number:
PCT/AU2007/001107

(22) International Filing Date: 8 August 2007 (08.08.2007)

(25) Filing Language: English

(26) Publication Language: English

(71) Applicant *(for all designated States except US)*: **SUPAVAC PTY LTD** [AU/AU]; Unit 4, 15 Cessna Drive, Caboolture, Queensland 4510 (AU).

(72) Inventor; and
(75) Inventor/Applicant *(for US only)*: **KROHN, Mark** [AU/AU]; Unit 4, 15 Cessna Drive, Caboolture, Queensland 4510 (AU).

(74) Agent: **GOODHEW, Chris T.**; 20 Cowper Street, Bulimba, Queensland 4171 (AU).

(81) Designated States *(unless otherwise indicated, for every kind of national protection available)*: AE, AG, AL, AM, AT, AU, AZ, BA, BB, BG, BH, BR, BW, BY, BZ, CA, CH, CN, CO, CR, CU, CZ, DE, DK, DM, DO, DZ, EC, EE, EG, ES, FI, GB, GD, GE, GH, GM, GT, HN, HR, HU, ID, IL, IN, IS, JP, KE, KG, KM, KN, KP, KR, KZ, LA, LC, LK, LR, LS, LT, LU, LY, MA, MD, ME, MG, MK, MN, MW, MX, MY, MZ, NA, NG, NI, NO, NZ, OM, PG, PH, PL, PT, RO, RS, RU, SC, SD, SE, SG, SK, SL, SM, SV, SY, TJ, TM, TN, TR, TT, TZ, UA, UG, US, UZ, VC, VN, ZA, ZM, ZW.

(84) Designated States *(unless otherwise indicated, for every kind of regional protection available)*: ARIPO (BW, GH, GM, KE, LS, MW, MZ, NA, SD, SL, SZ, TZ, UG, ZM, ZW), Eurasian (AM, AZ, BY, KG, KZ, MD, RU, TJ, TM), European (AT, BE, BG, CH, CY, CZ, DE, DK, EE, ES, FI, FR, GB, GR, HU, IE, IS, IT, LT, LU, LV, MC, MT, NL, PL, PT, RO, SE, SI, SK, TR), OAPI (BF, BJ, CF, CG, CI, CM, GA, GN, GQ, GW, ML, MR, NE, SN, TD, TG).

Published:
— *with international search report*

(54) **Title:** PUMP APPARATUS

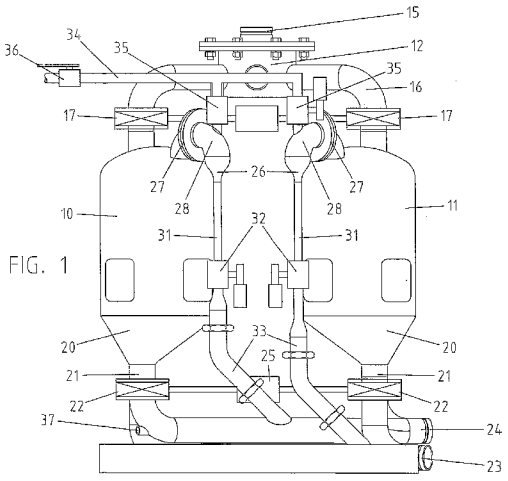

FIG. 1

(57) **Abstract:** Vessels (10, 11, 12 and 13) are associated with an inlet manifold (14) passing to inlets (16), each controlled by a knifegate valve (17). The lower ends of the pots (10) and (12), and pots (11) and (13), pass material through respective outlet knifegate valves (22) to respective first (23) and second (24) delivery lines. The respective knifegate valves (17) and outlet knifegate valves (22) of pots (10) and (11) on the one hand and pots (12) and (13) on the other, are operable by respective common pneumatic actuators (25). Each pot has an ejector assembly (26) having an upper chamber (28), an air injector nozzle (30), and an accelerator tube (31) to create the venturi function. An air cycling valve (32) transitions the upper chamber (28) between a depressurized space and a pressurized space. The accelerator tube (31) exhausts to a delivery line (23 or 24). Ejector assembly (26) air is supplied via air control valve (35). The respective delivery lines (23) and (24) each have an eductor port (37) which allow for air to be ported into the line. The completed load and discharge cycle is governed by a pneumatic PLC and pneumatic timers.

WO 2009/018599 A1