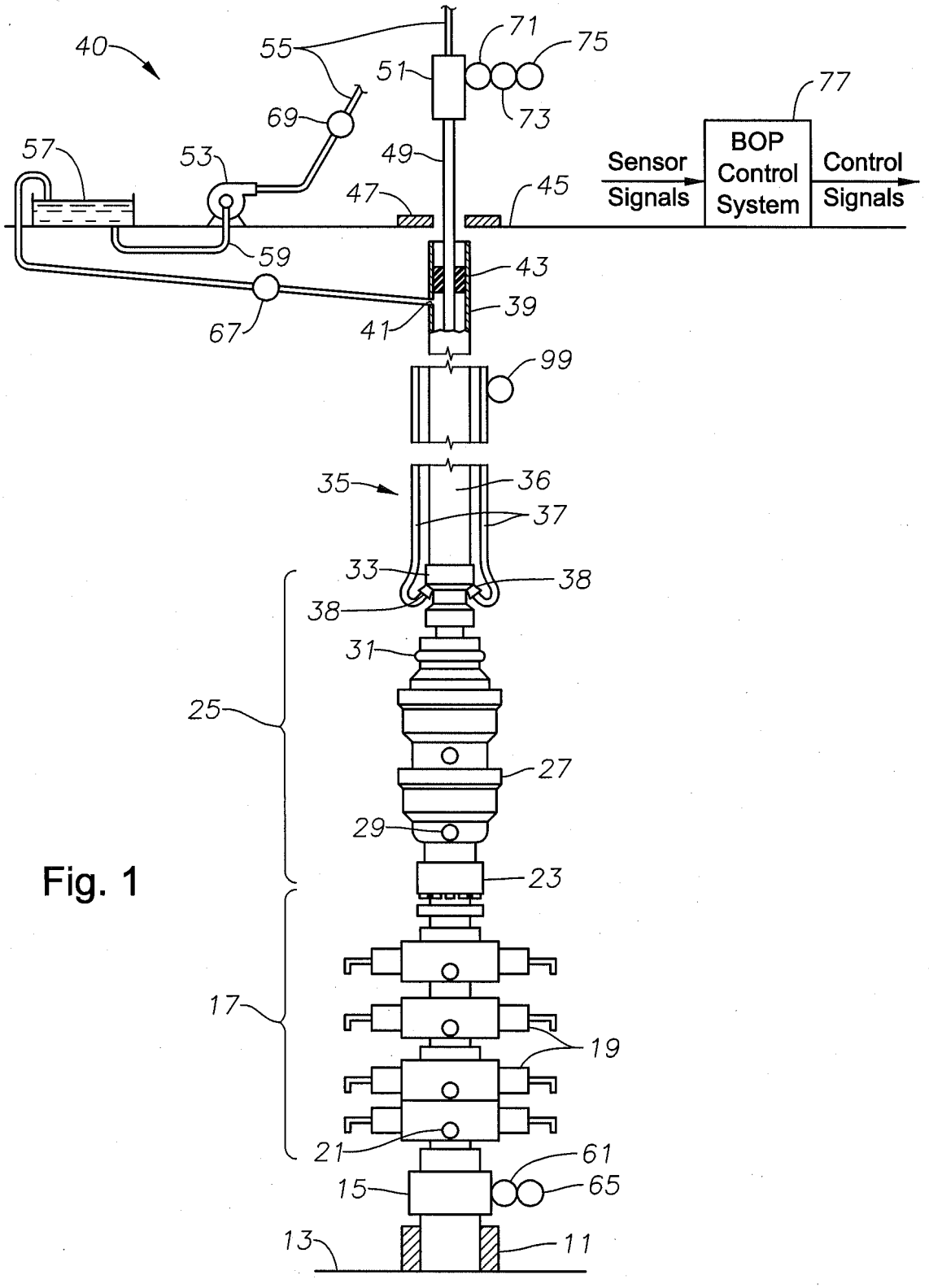
40
55
71
75
51
73
77
69
57
53
49
Sensor Signals
BOP Control System
Control Signals
47
45
59
43
39
67
41
99
35
36
37
33
38
38
31
25
27
29
23
17
19
21
61
15
65
13
11

Fig. 1

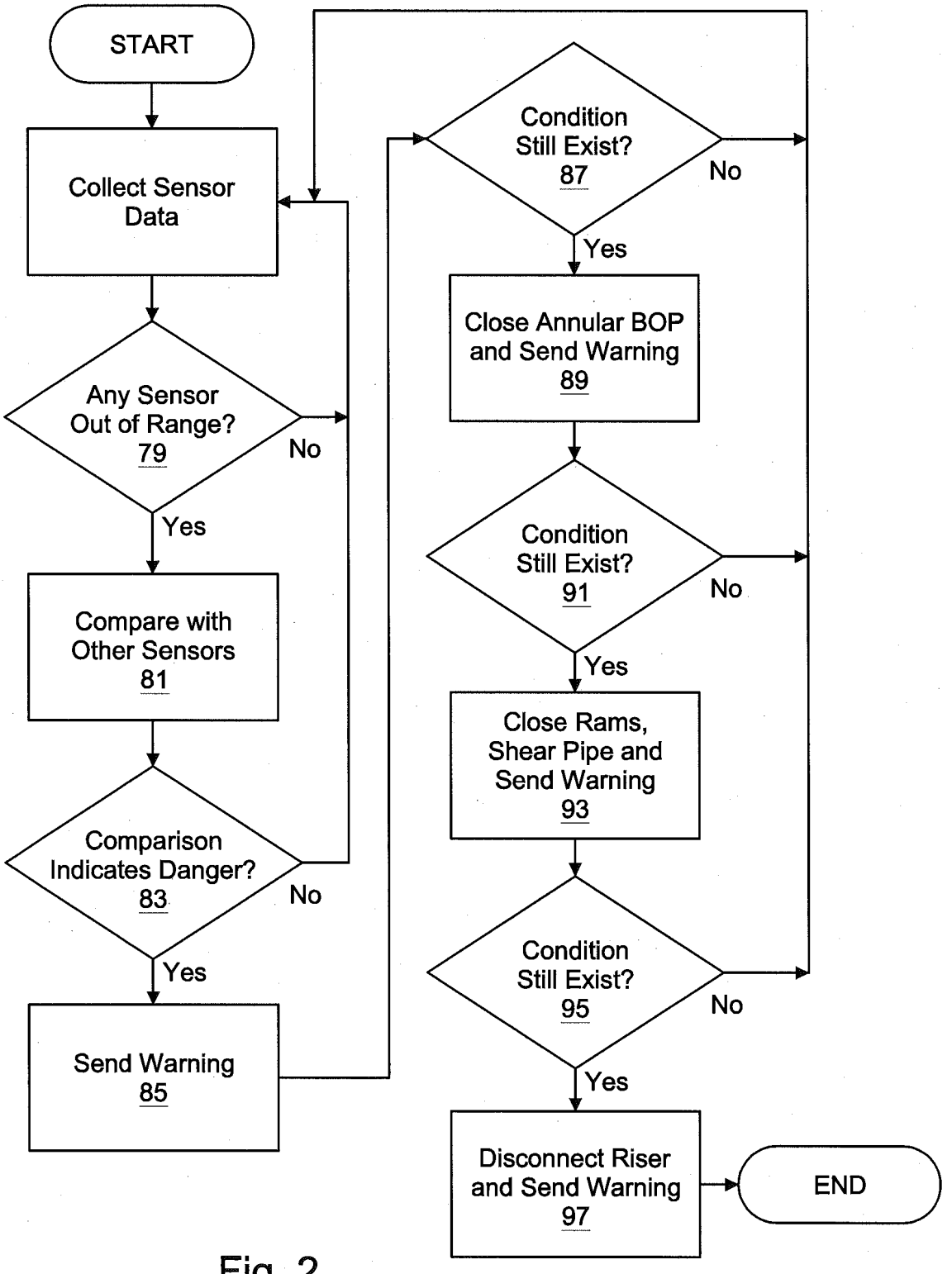
START
Collect Sensor Data
Any Sensor Out of Range? 79
No
Yes
Compare with Other Sensors 81
Comparison Indicates Danger? 83
No
Yes
Send Warning 85
Condition Still Exist? 87
No
Yes
Close Annular BOP and Send Warning 89
Condition Still Exist? 91
No
Yes
Close Rams, Shear Pipe and Send Warning 93
Condition Still Exist? 95
No
Yes
Disconnect Riser and Send Warning 97
END

Fig. 2