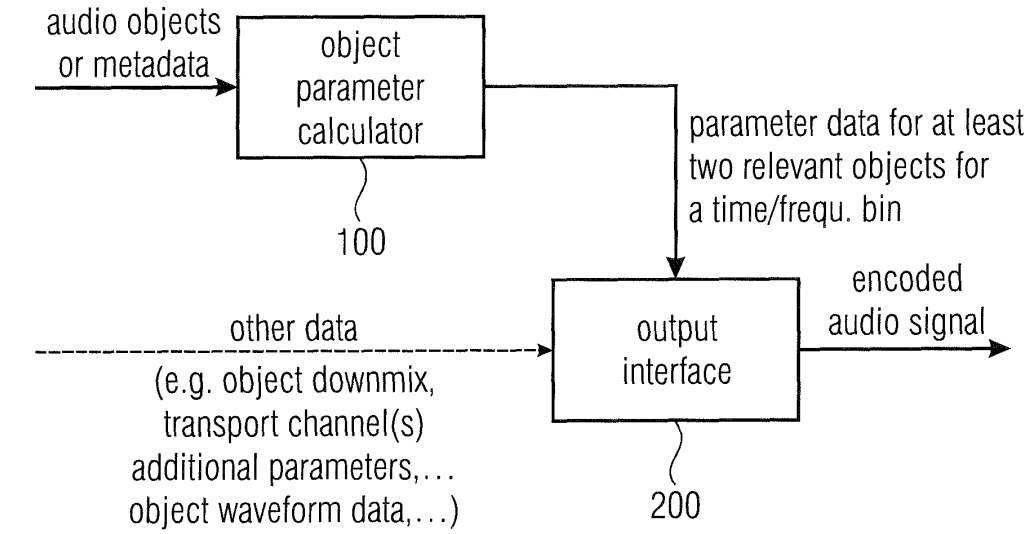
audio objects
or metadata
object
parameter
calculator
100
parameter data for at least
two relevant objects for
a time/frequ. bin
other data
(e.g. object downmix,
transport channel(s)
additional parameters,...
object waveform data,...)
output
interface
200
encoded
audio signal

Fig. 1a

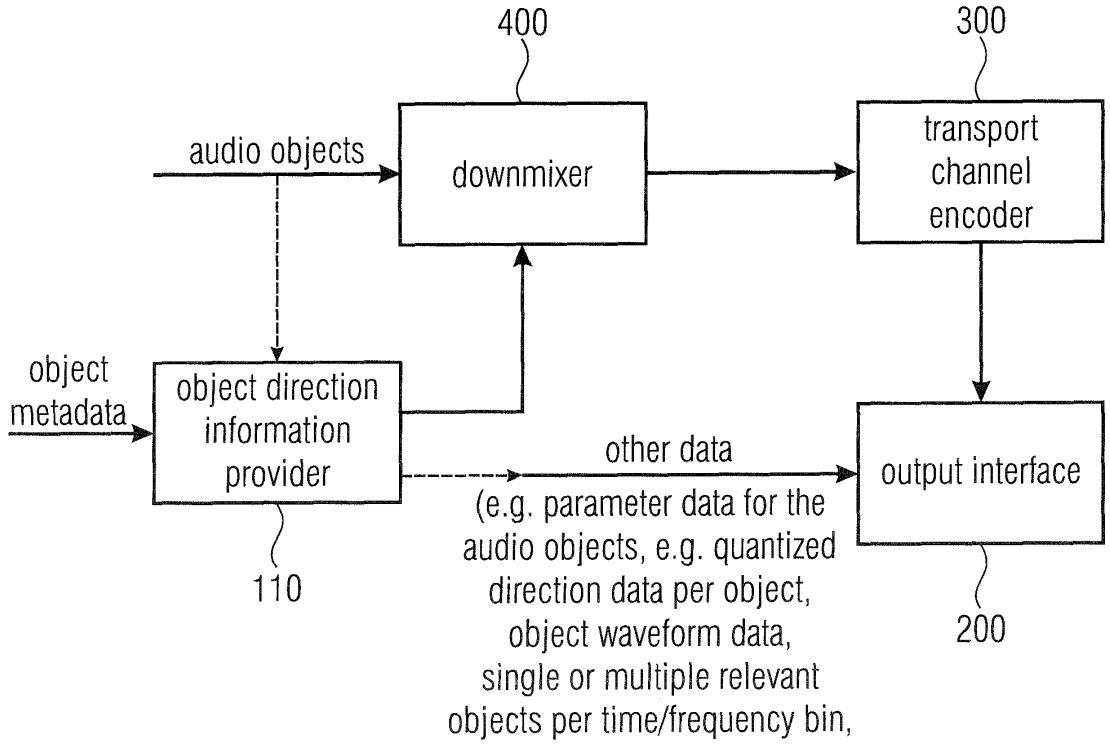
400
300
audio objects
downmixer
transport
channel
encoder
object
metadata
object direction
information
provider
110
other data
(e.g. parameter data for the
audio objects, e.g. quantized
direction data per object,
object waveform data,
single or multiple relevant
objects per time/frequency bin,
output interface
200

Fig. 1b

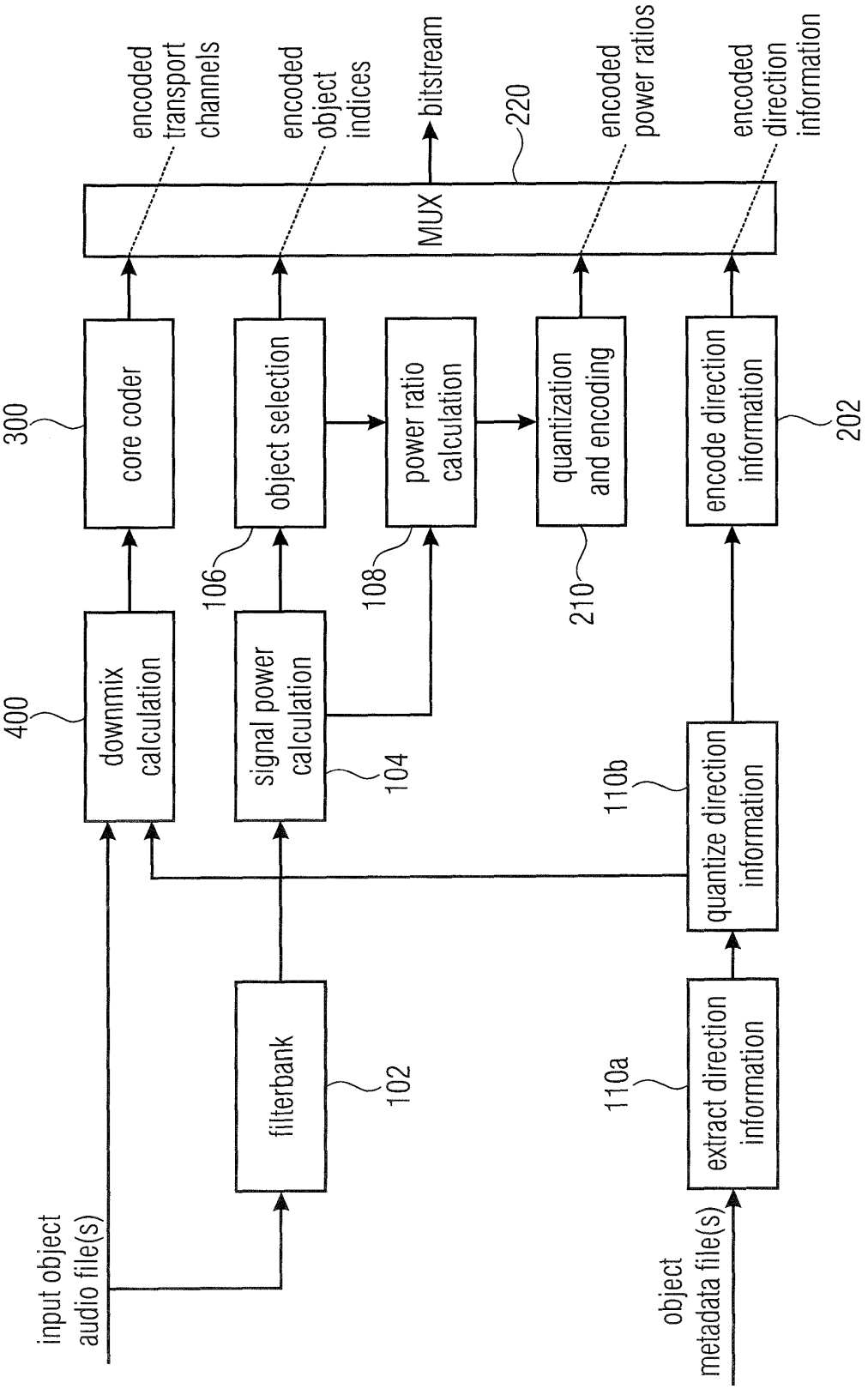
input object audio file(s)
object metadata file(s)
filterbank
102
extract direction information
110a
downmix calculation
400
signal power calculation
104
quantize direction information
110b
core coder
300
object selection
106
power ratio calculation
108
quantization and encoding
210
encode direction information
202
MUX
220
bitstream
encoded transport channels
encoded object indices
encoded power ratios
encoded direction information

Fig. 2

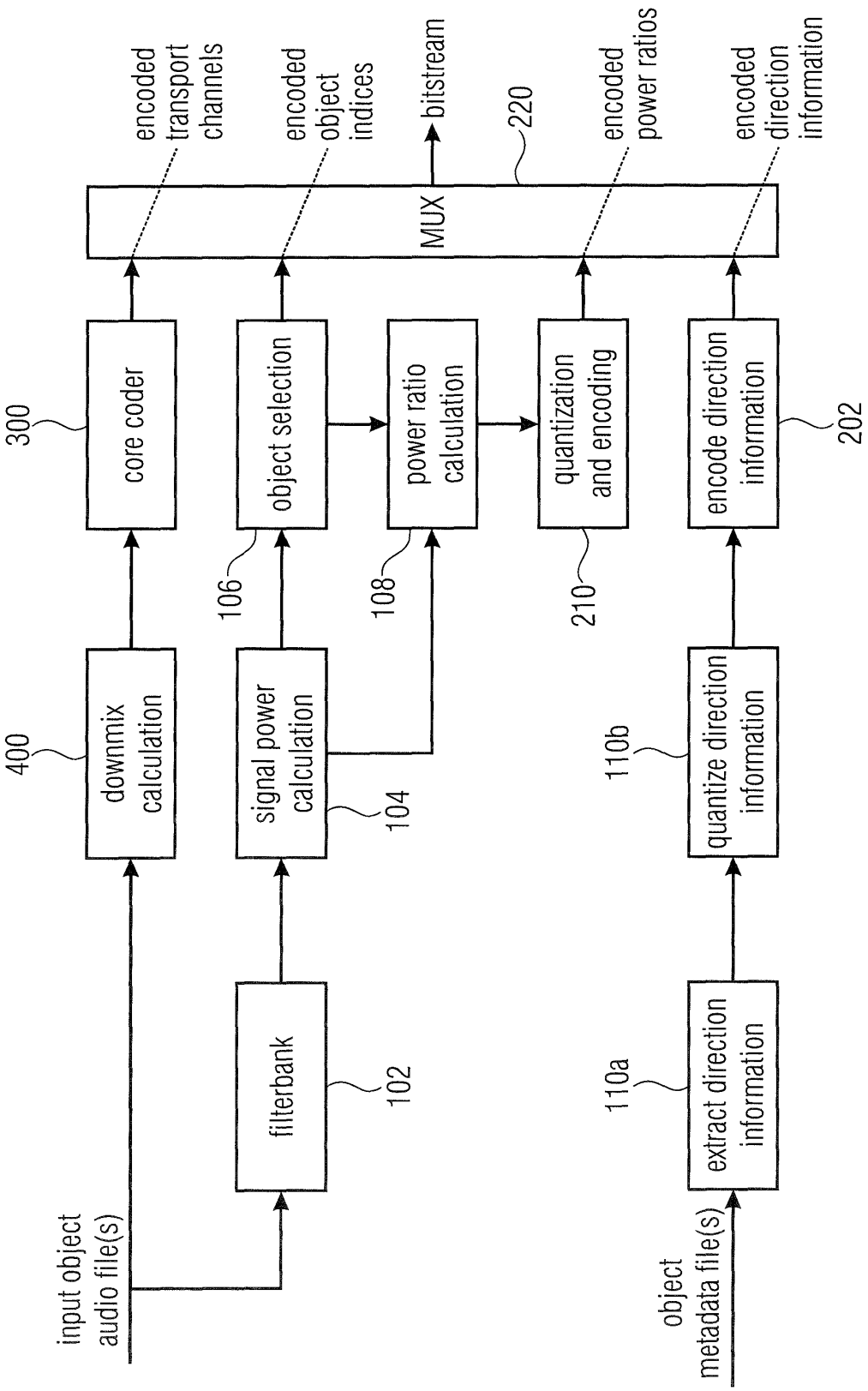
input object audio file(s)
object metadata file(s)
downmix calculation
400
core coder
300
filterbank
102
signal power calculation
104
object selection
106
power ratio calculation
108
quantization and encoding
210
extract direction information
110a
quantize direction information
110b
encode direction information
202
MUX
220
bitstream
encoded transport channels
encoded object indices
encoded power ratios
encoded direction information

Fig. 3

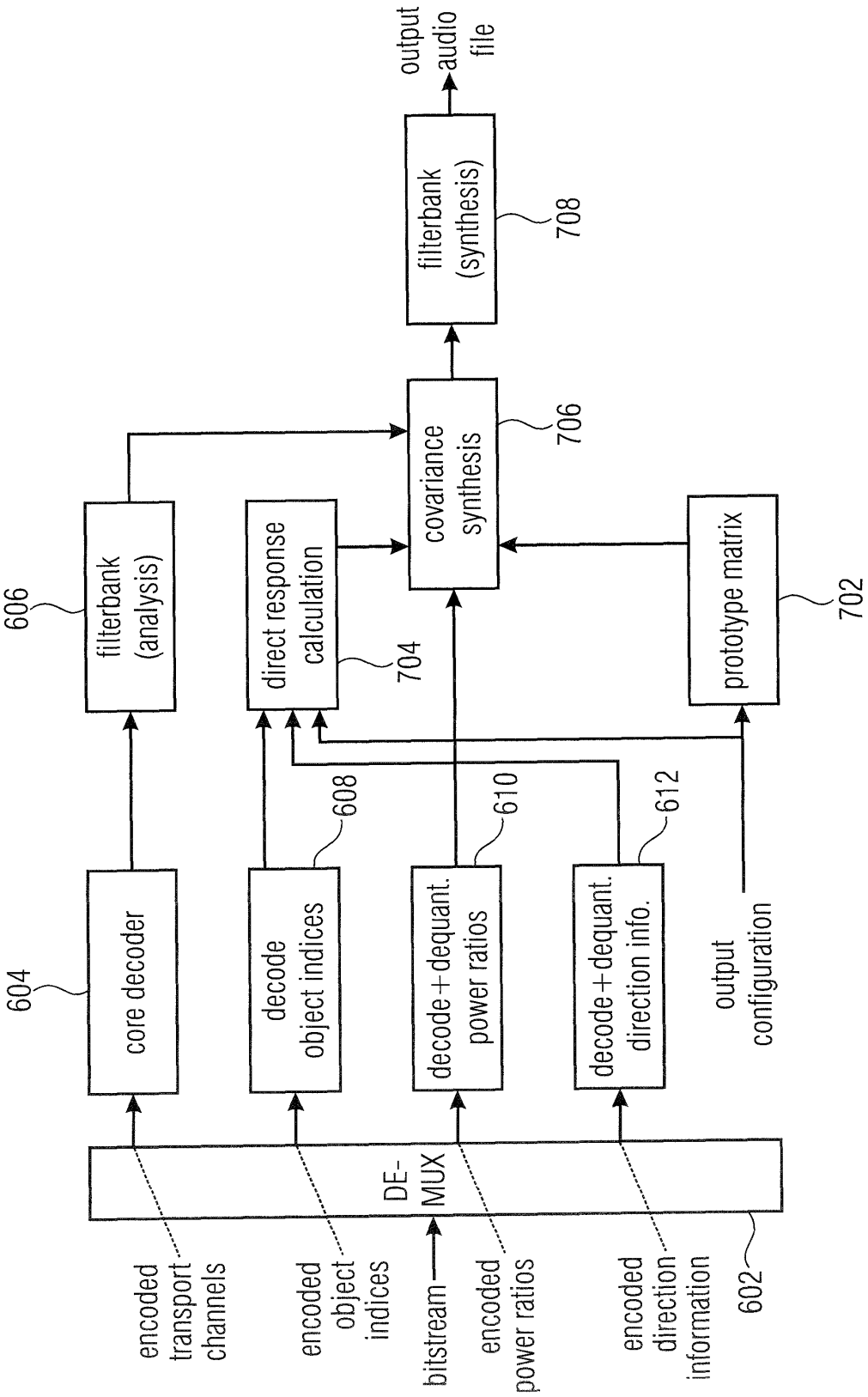
output audio file
filterbank (synthesis)
708
covariance synthesis
706
direct response calculation
704
filterbank (analysis)
606
prototype matrix
702
core decoder
604
decode object indices
608
decode + dequant. power ratios
610
decode + dequant. direction info.
612
output configuration
DE-MUX
602
encoded transport channels
encoded object indices
bitstream
encoded power ratios
encoded direction information

Fig. 4

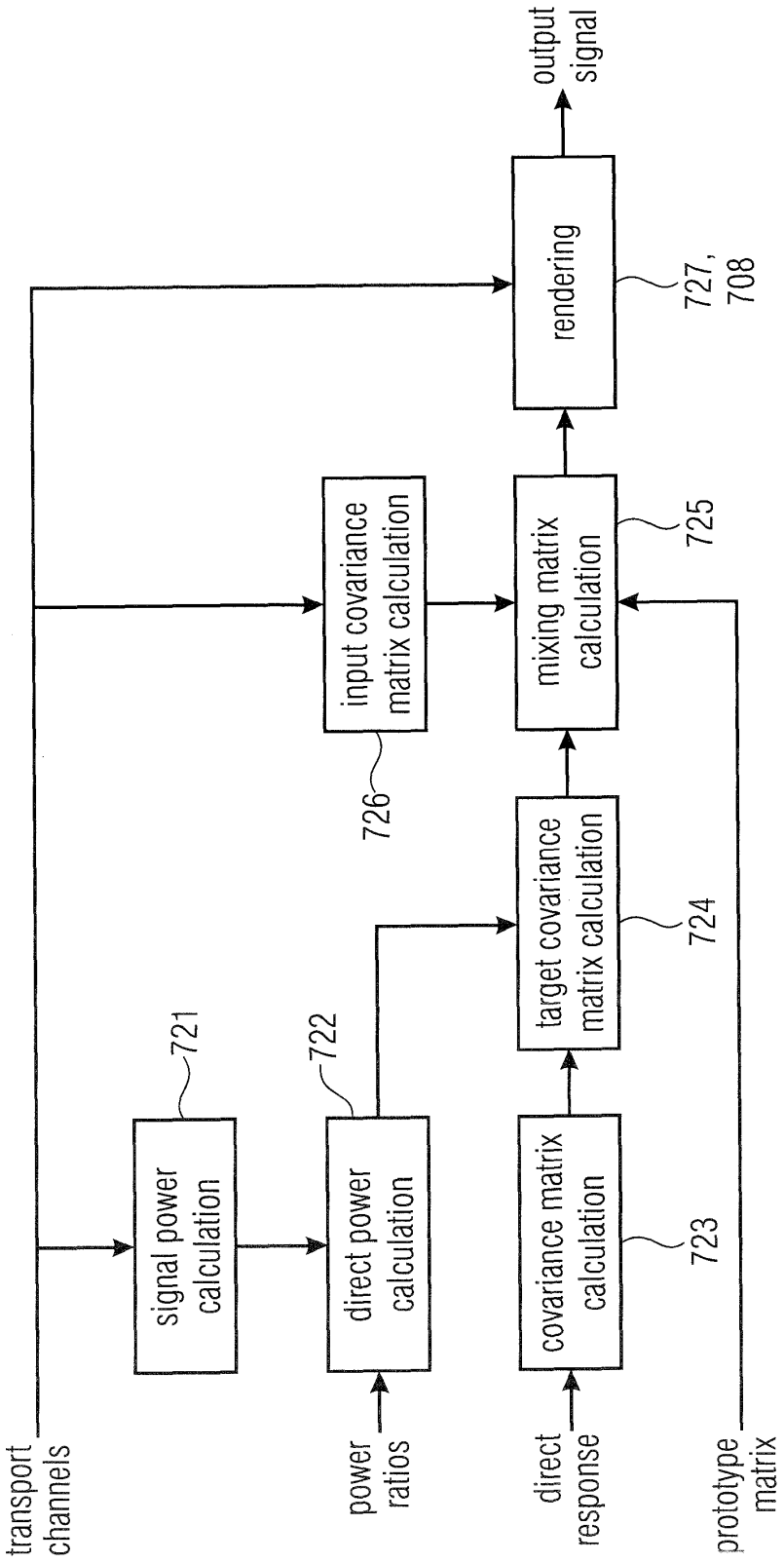
output signal
rendering
727, 708
input covariance matrix calculation
726
mixing matrix calculation
725
target covariance matrix calculation
724
covariance matrix calculation
723
direct power calculation
722
signal power calculation
721
transport channels
power ratios
direct response
prototype matrix

Fig. 5

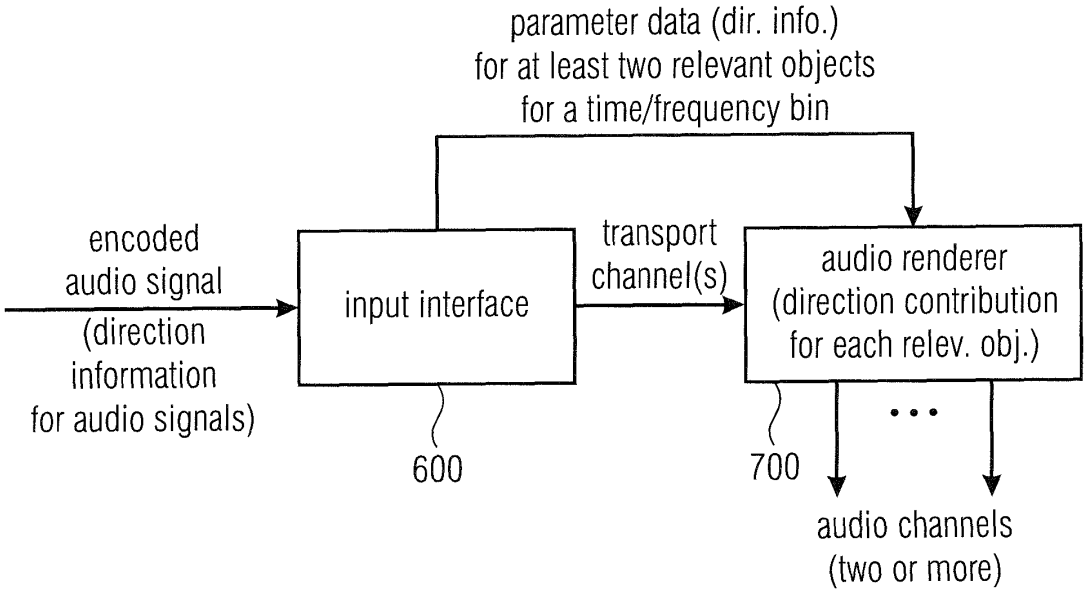
parameter data (dir. info.)
for at least two relevant objects
for a time/frequency bin
encoded
audio signal
(direction
information
for audio signals)
input interface
transport
channel(s)
audio renderer
(direction contribution
for each relev. obj.)
600
700
audio channels
(two or more)

Fig. 6a

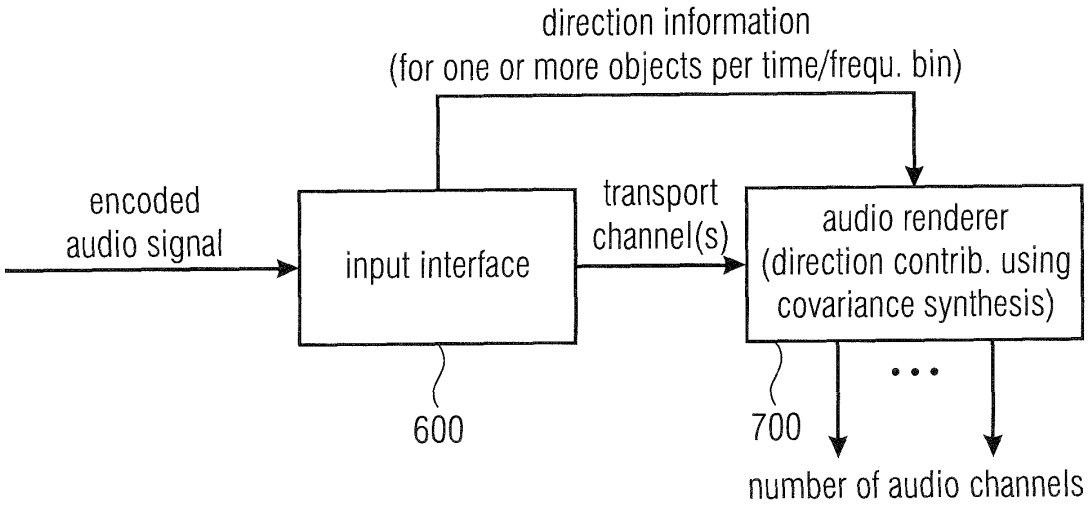
direction information
(for one or more objects per time/frequ. bin)
encoded
audio signal
input interface
transport
channel(s)
audio renderer
(direction contrib. using
covariance synthesis)
600
700
number of audio channels

Fig. 6b

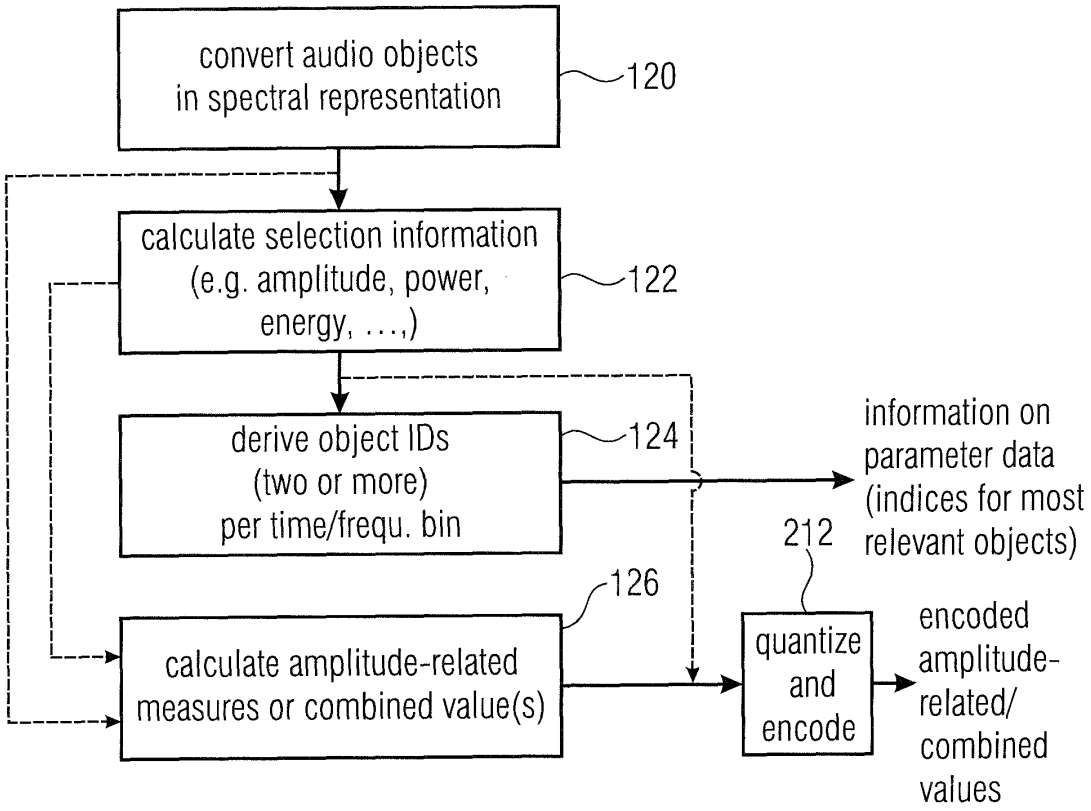
convert audio objects in spectral representation
120
calculate selection information (e.g. amplitude, power, energy, ...,)
122
derive object IDs (two or more) per time/frequ. bin
124
information on parameter data (indices for most relevant objects)
212
126
calculate amplitude-related measures or combined value(s)
quantize and encode
encoded amplitude-related/ combined values

Fig. 7a

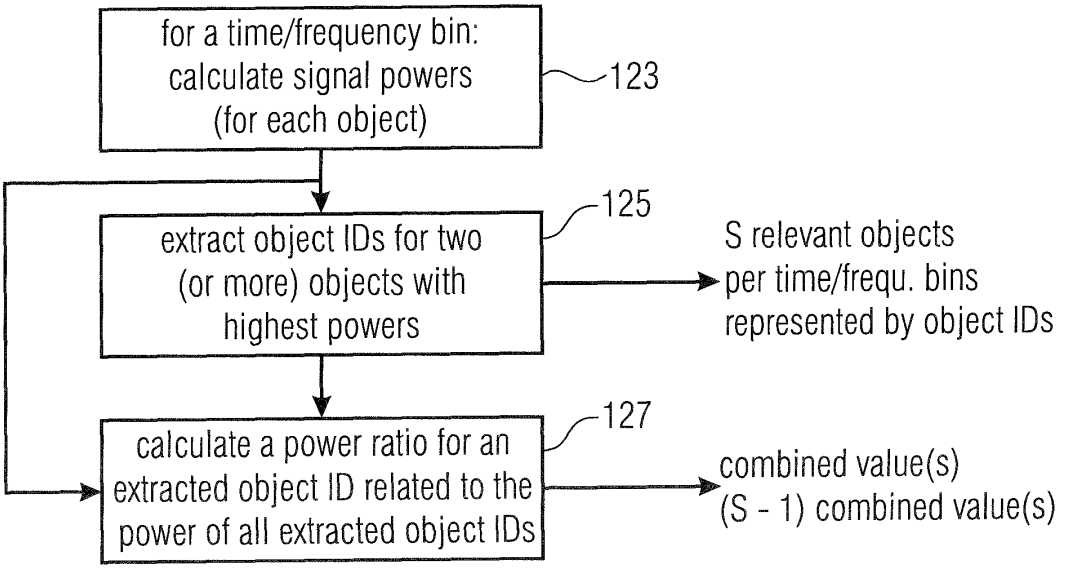
for a time/frequency bin: calculate signal powers (for each object)
123
extract object IDs for two (or more) objects with highest powers
125
S relevant objects per time/frequ. bins represented by object IDs
calculate a power ratio for an extracted object ID related to the power of all extracted object IDs
127
combined value(s) (S - 1) combined value(s)

Fig. 7b

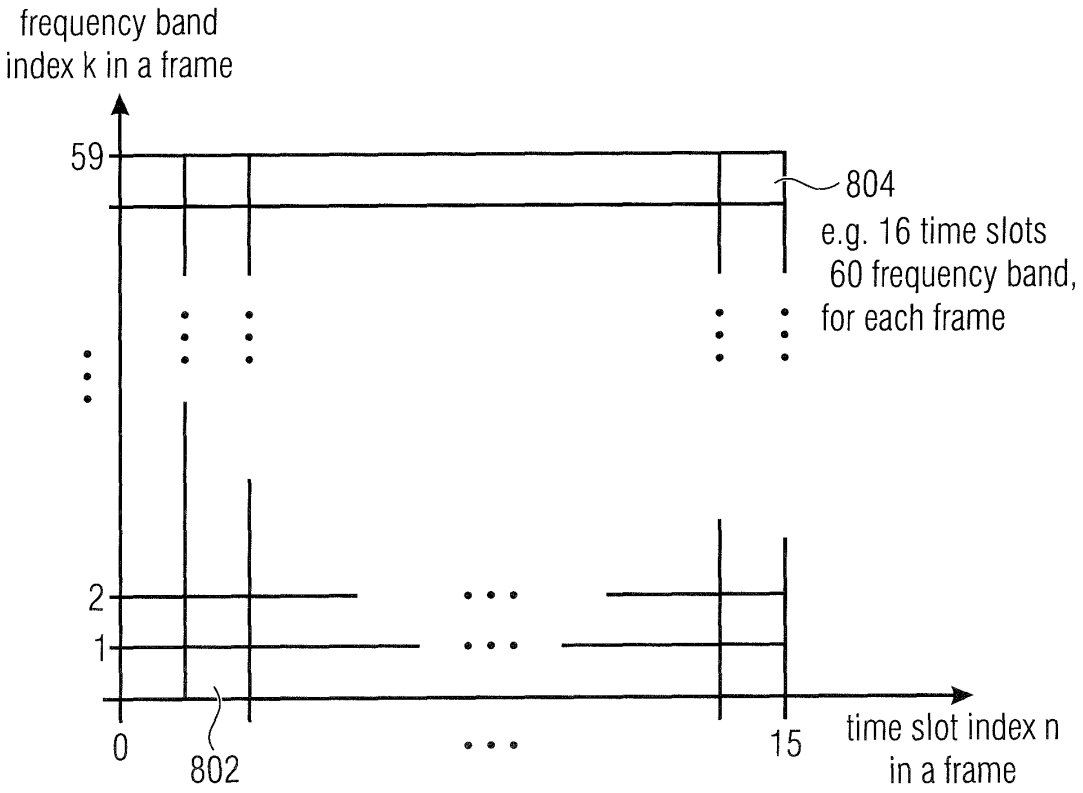

Fig. 8a

(HIGH RESOLUTION FILTERBANK TIME/FREQUENCY FILES)

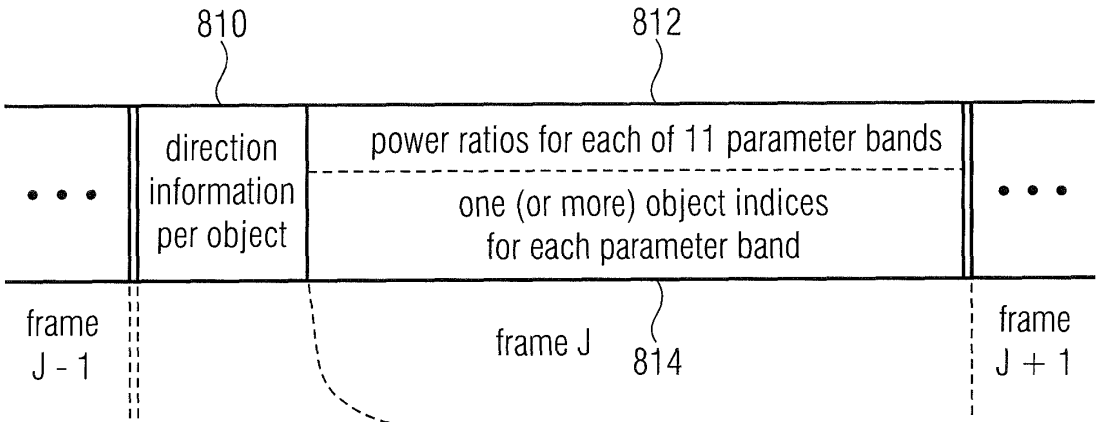

Fig. 8b

(PARAMETER DATA FOR EACH FRAME)

object ID	direction information
1	Azi. / elev.
2	Azi. / elev.
3	Azi. / elev.
4	
5	
⋮	⋮
N-1	
N	

816 818

Fig. 8c

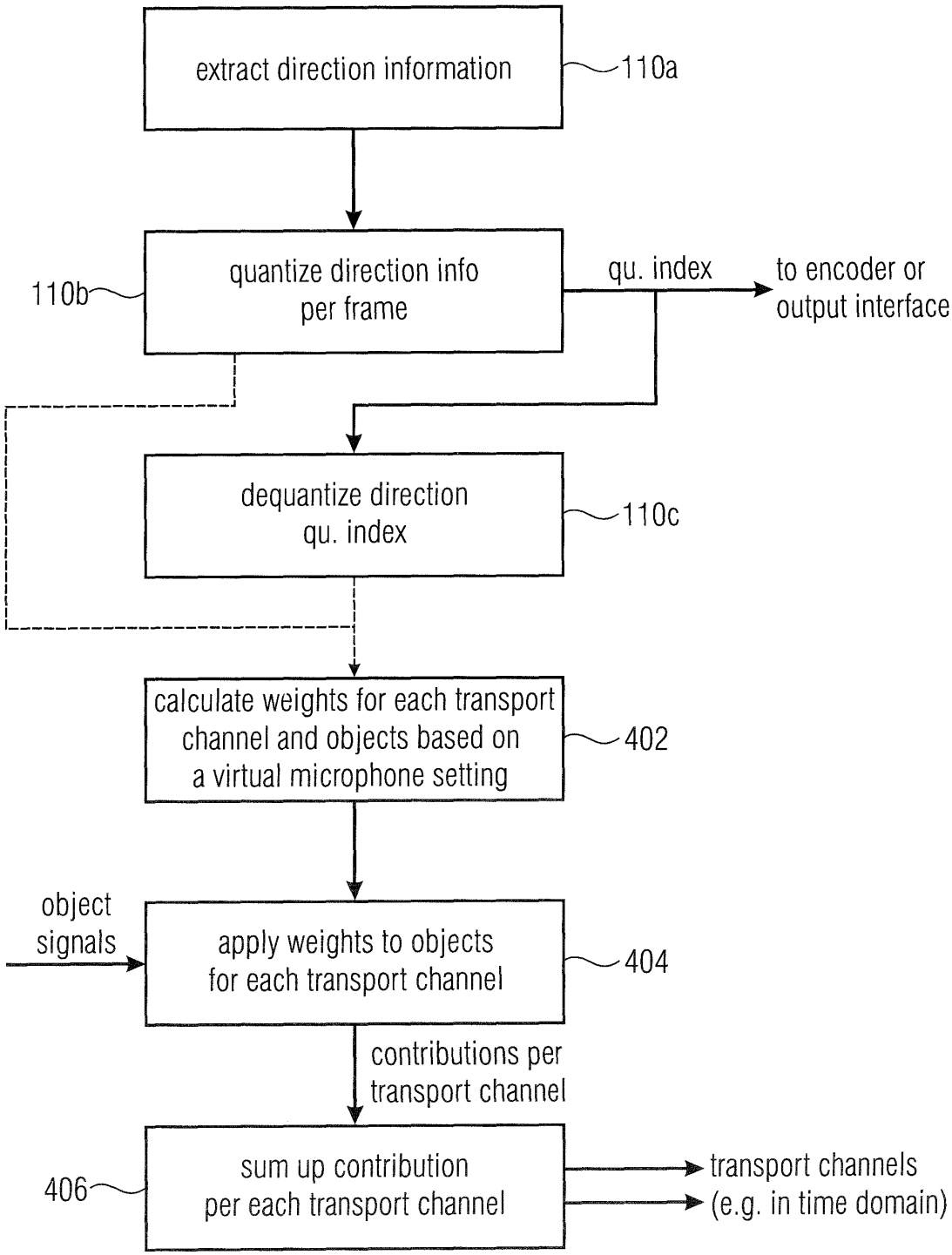
extract direction information
110a
quantize direction info per frame
110b
qu. index
to encoder or output interface
dequantize direction qu. index
110c
calculate weights for each transport channel and objects based on a virtual microphone setting
402
object signals
apply weights to objects for each transport channel
404
contributions per transport channel
sum up contribution per each transport channel
406
transport channels (e.g. in time domain)

Fig. 9a

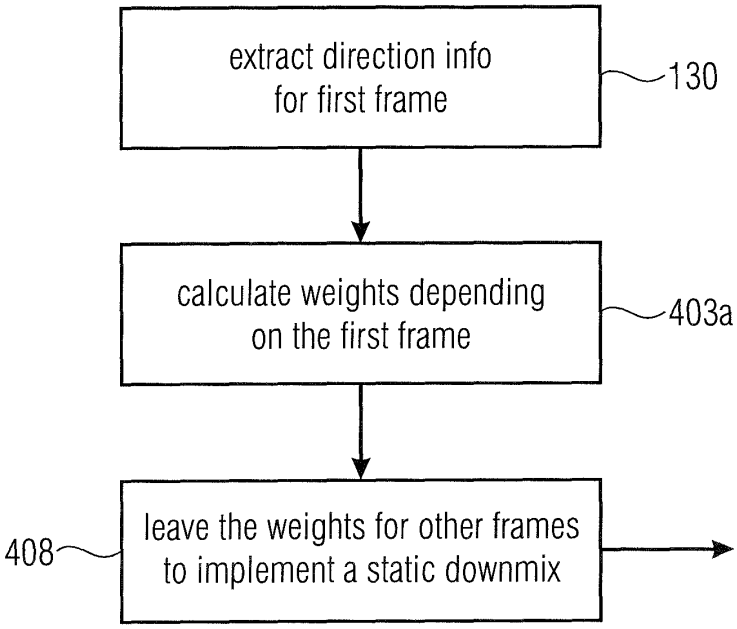
extract direction info for first frame
130
calculate weights depending on the first frame
403a
leave the weights for other frames to implement a static downmix
408

Fig. 9b

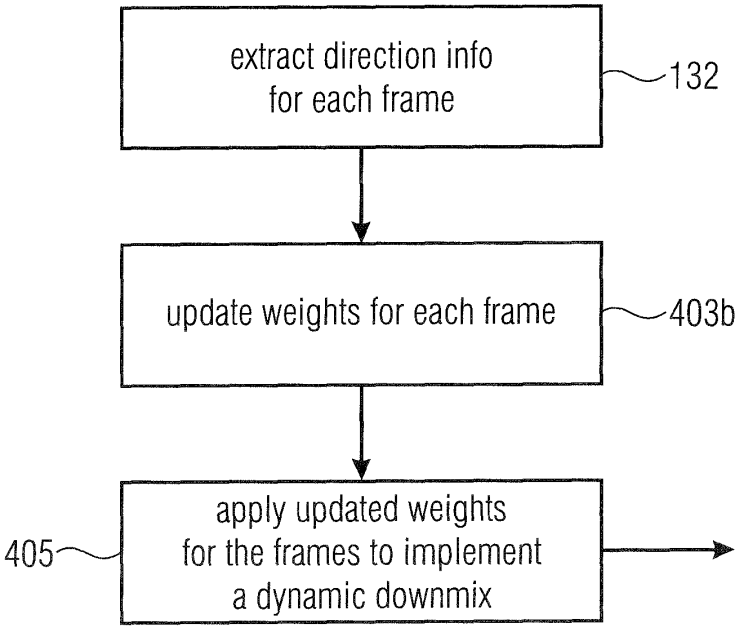
extract direction info for each frame
132
update weights for each frame
403b
apply updated weights for the frames to implement a dynamic downmix
405

Fig. 9c

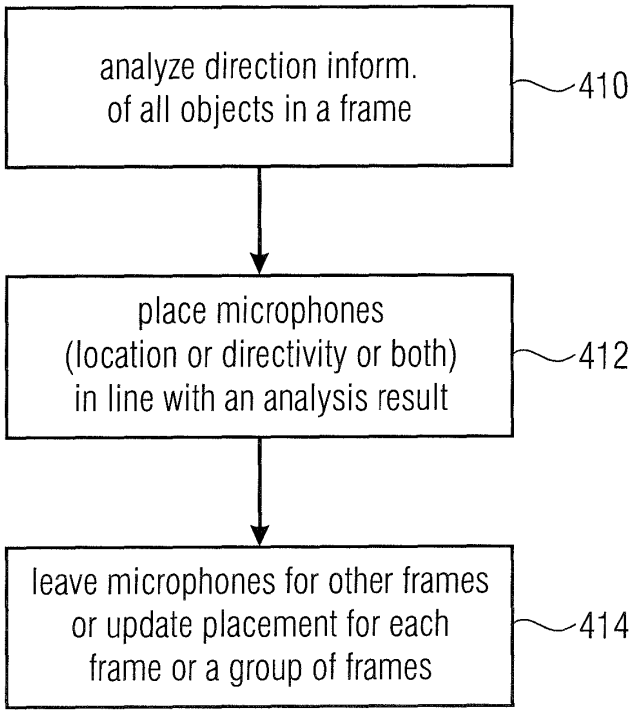
analyze direction inform. of all objects in a frame
410
place microphones (location or directivity or both) in line with an analysis result
412
leave microphones for other frames or update placement for each frame or a group of frames
414

Fig. 9d

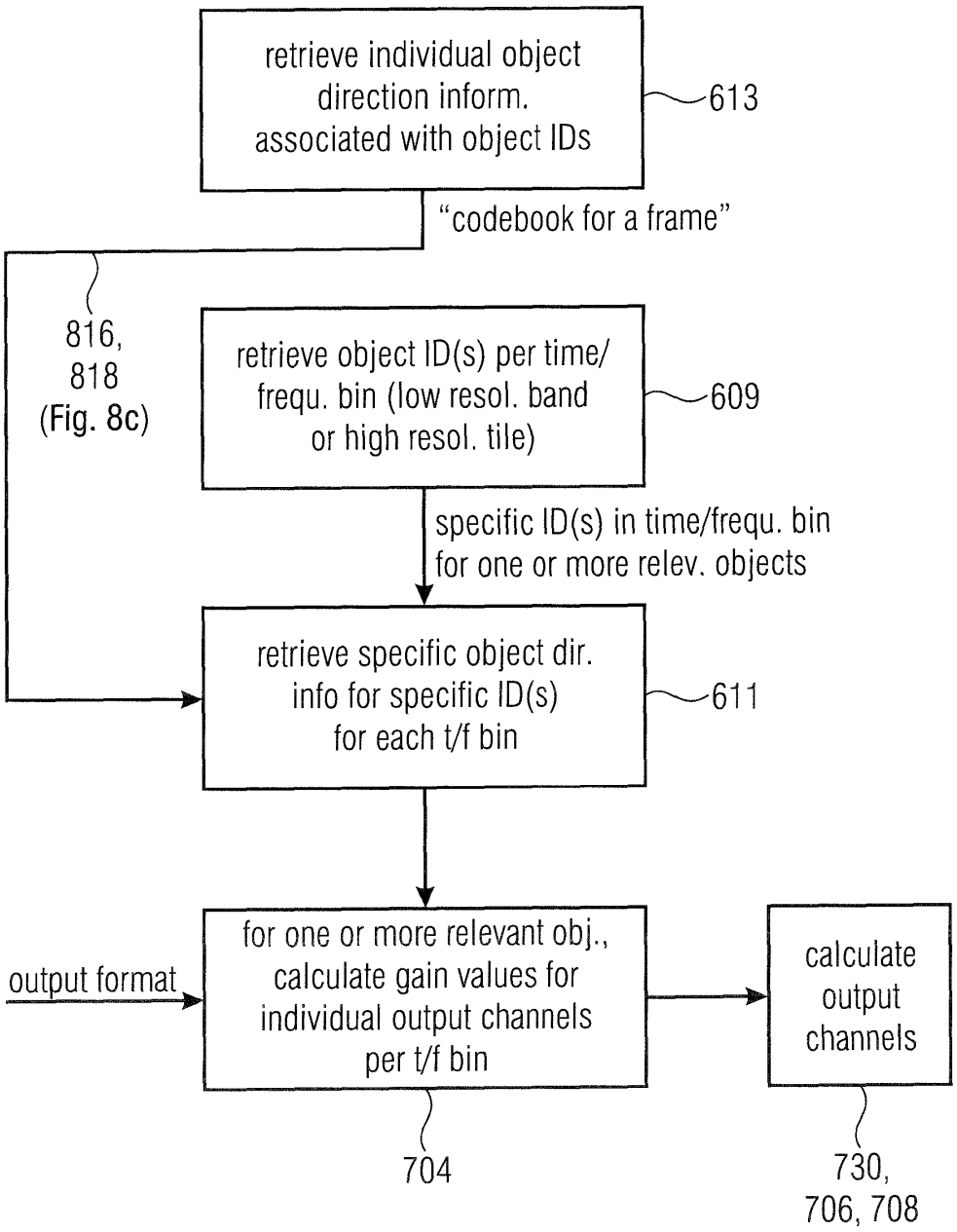
retrieve individual object direction inform. associated with object IDs
613
"codebook for a frame"
816, 818 (Fig. 8c)
retrieve object ID(s) per time/ frequ. bin (low resol. band or high resol. tile)
609
specific ID(s) in time/frequ. bin for one or more relev. objects
retrieve specific object dir. info for specific ID(s) for each t/f bin
611
output format
for one or more relevant obj., calculate gain values for individual output channels per t/f bin
calculate output channels
704
730, 706, 708

Fig. 10a

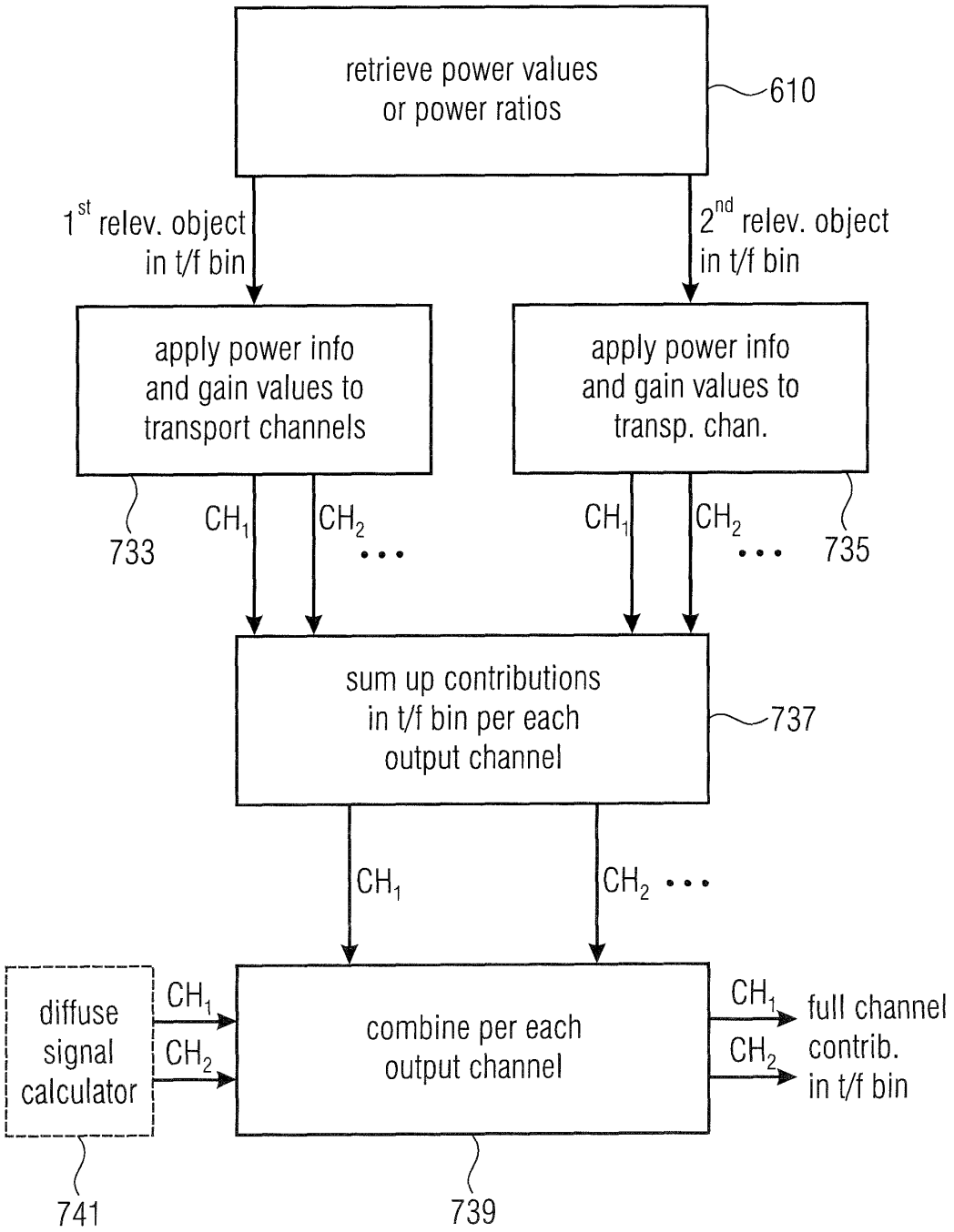
retrieve power values or power ratios
610
1st relev. object in t/f bin
2nd relev. object in t/f bin
apply power info and gain values to transport channels
apply power info and gain values to transp. chan.
733
CH1
CH2
CH1
CH2
735
sum up contributions in t/f bin per each output channel
737
CH1
CH2
diffuse signal calculator
CH1
CH2
combine per each output channel
CH1
CH2
full channel contrib. in t/f bin
741
739

Fig. 10b

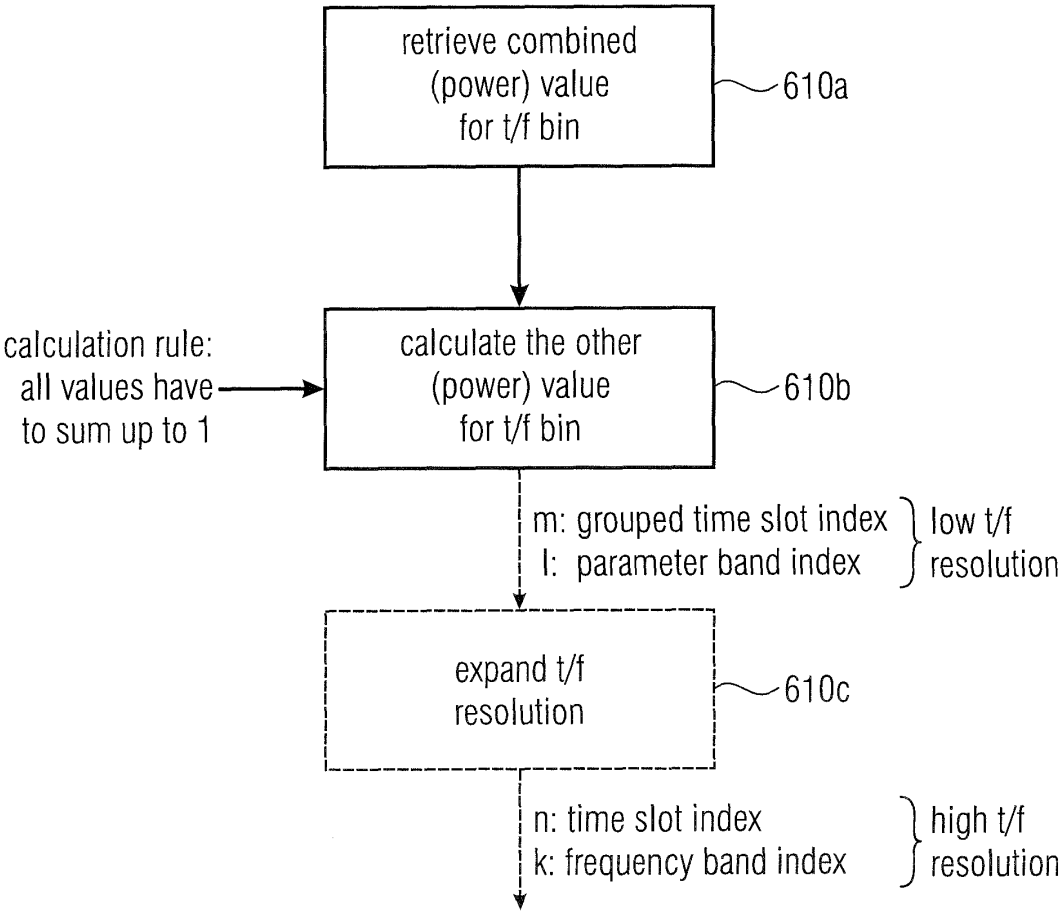
retrieve combined (power) value for t/f bin
610a
calculation rule: all values have to sum up to 1
calculate the other (power) value for t/f bin
610b
m: grouped time slot index
l: parameter band index
low t/f resolution
expand t/f resolution
610c
n: time slot index
k: frequency band index
high t/f resolution

Fig. 10c

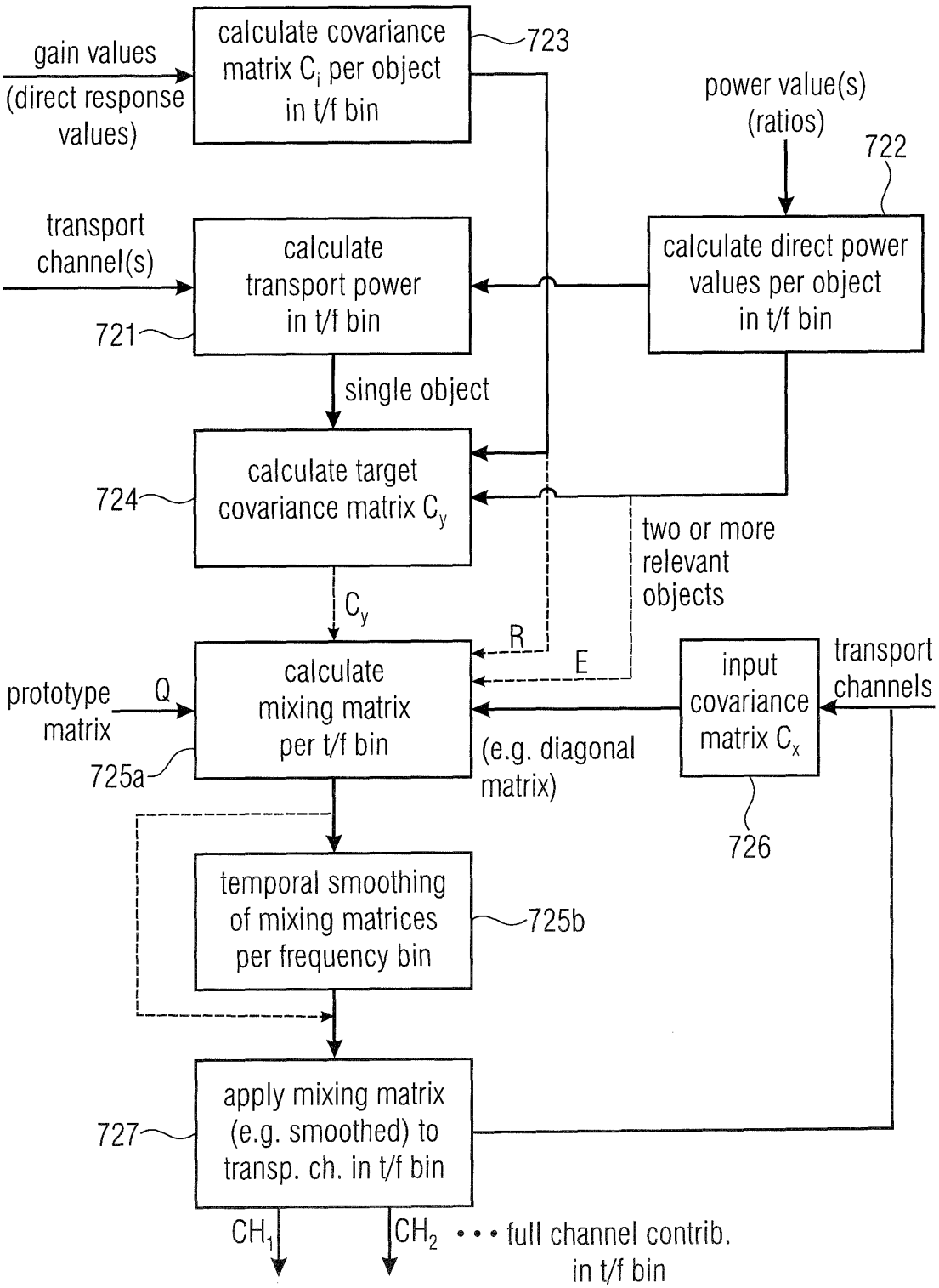
gain values
(direct response values)
calculate covariance matrix C_i per object in t/f bin
723
power value(s) (ratios)
722
transport channel(s)
calculate transport power in t/f bin
721
calculate direct power values per object in t/f bin
single object
calculate target covariance matrix C_y
724
two or more relevant objects
C_y
R
E
prototype matrix
Q
calculate mixing matrix per t/f bin
725a
(e.g. diagonal matrix)
input covariance matrix C_x
726
transport channels
temporal smoothing of mixing matrices per frequency bin
725b
apply mixing matrix (e.g. smoothed) to transp. ch. in t/f bin
727
CH_1
CH_2
• • • full channel contrib. in t/f bin

Fig. 10d

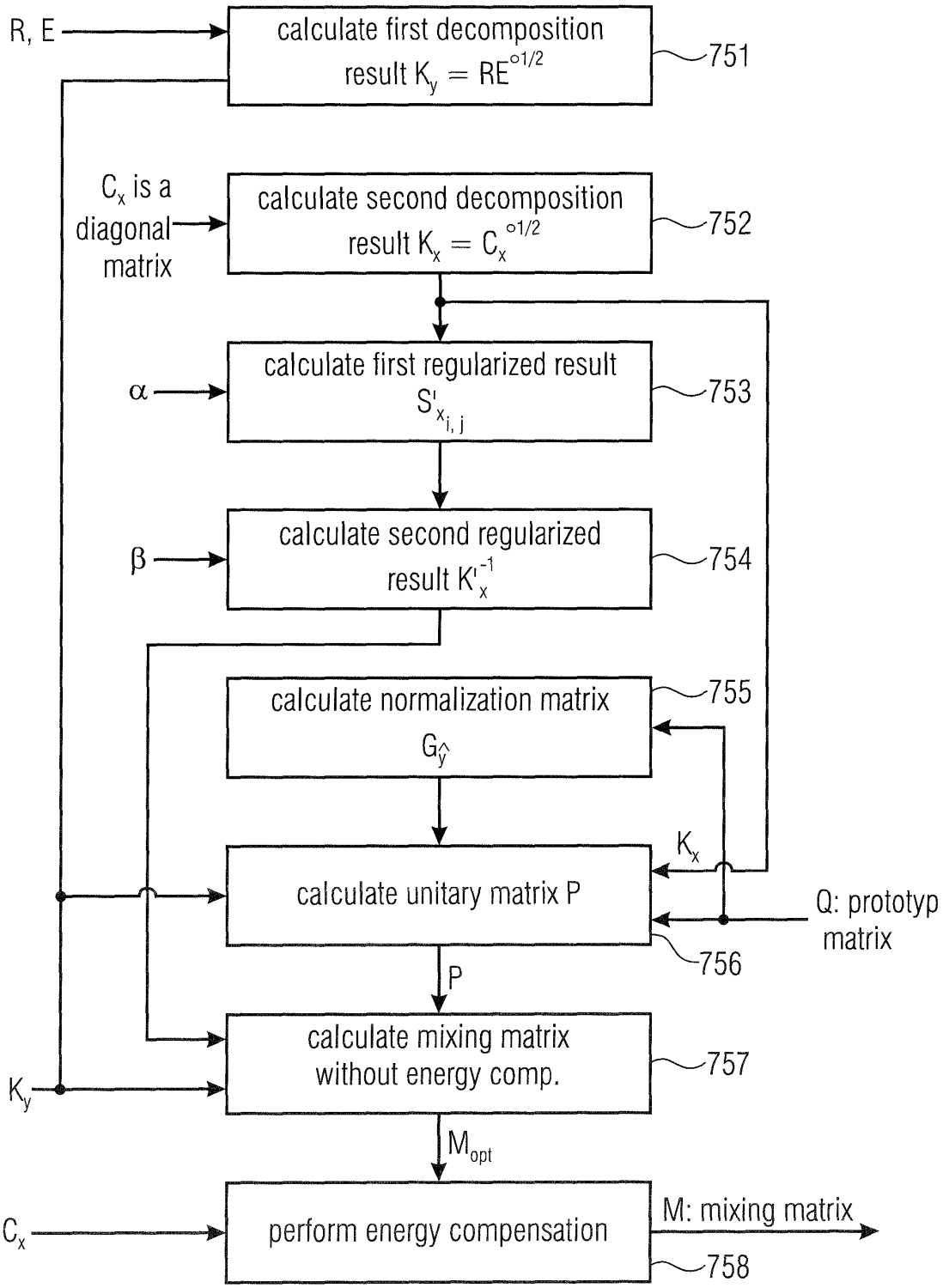
R, E
calculate first decomposition result $K_y = RE^{\circ 1/2}$
751
C_x is a diagonal matrix
calculate second decomposition result $K_x = C_x^{\circ 1/2}$
752
α
calculate first regularized result $S'_{x_{i,j}}$
753
β
calculate second regularized result K'^{-1}_x
754
calculate normalization matrix $G_{\hat{y}}$
755
K_x
calculate unitary matrix P
Q: prototyp matrix
756
P
calculate mixing matrix without energy comp.
757
K_y
M_{opt}
C_x
perform energy compensation
M: mixing matrix
758

Fig. 11

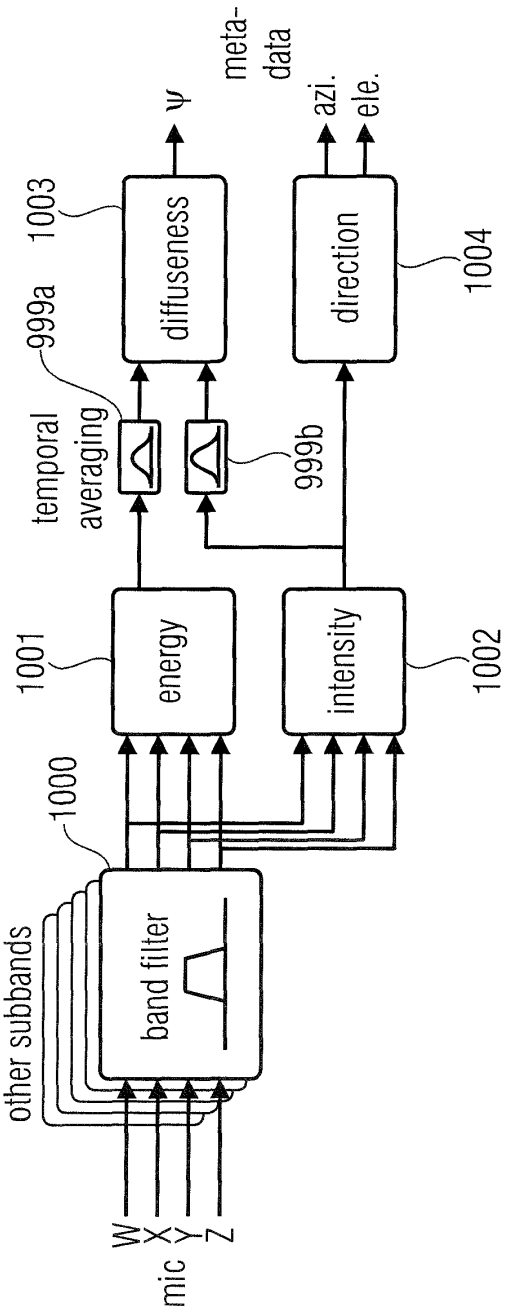

Fig. 12a
(PRIOR ART)

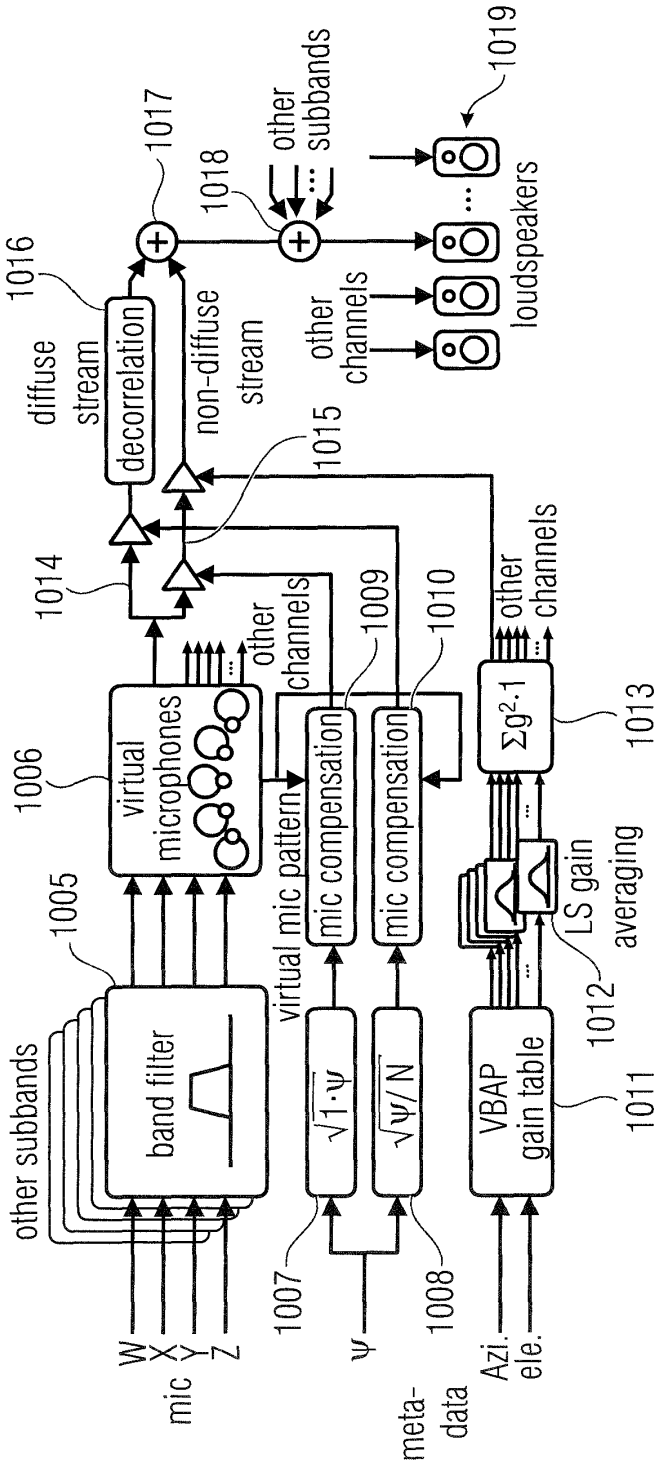

Fig. 12b
(PRIOR ART)