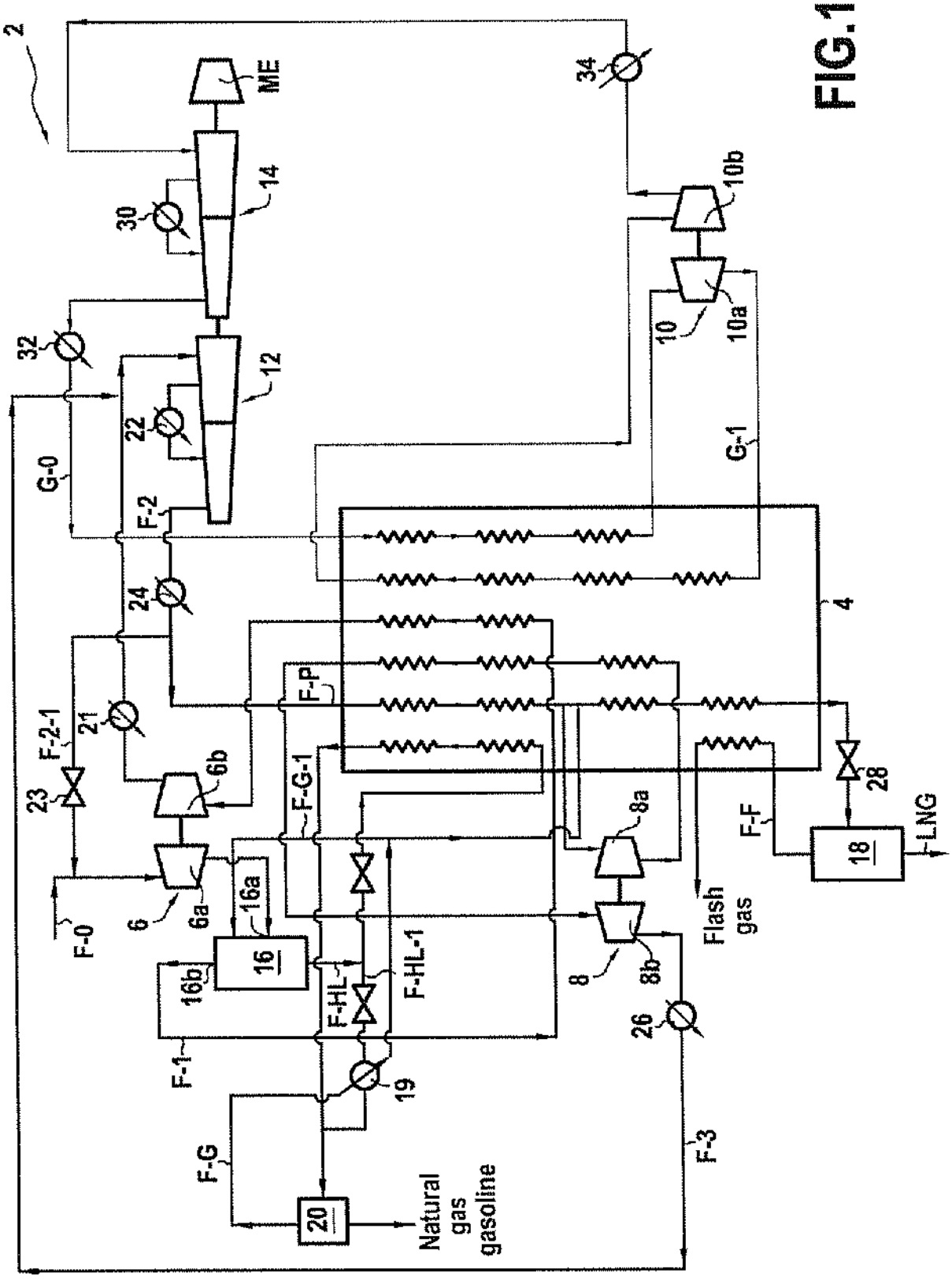
2
ME
34
14
30
10b
10
10a
32
12
22
G-0
G-1
F-2
24
4
F-P
F-2-1
21
23
6b
F-G-1
8a
28
F-F
18
LNG
6
6a
16a
16
16b
F-HL
F-HL-1
8
8b
Flash gas
F-0
F-1
26
19
F-3
F-G
20
Natural gas gasoline

FIG.1

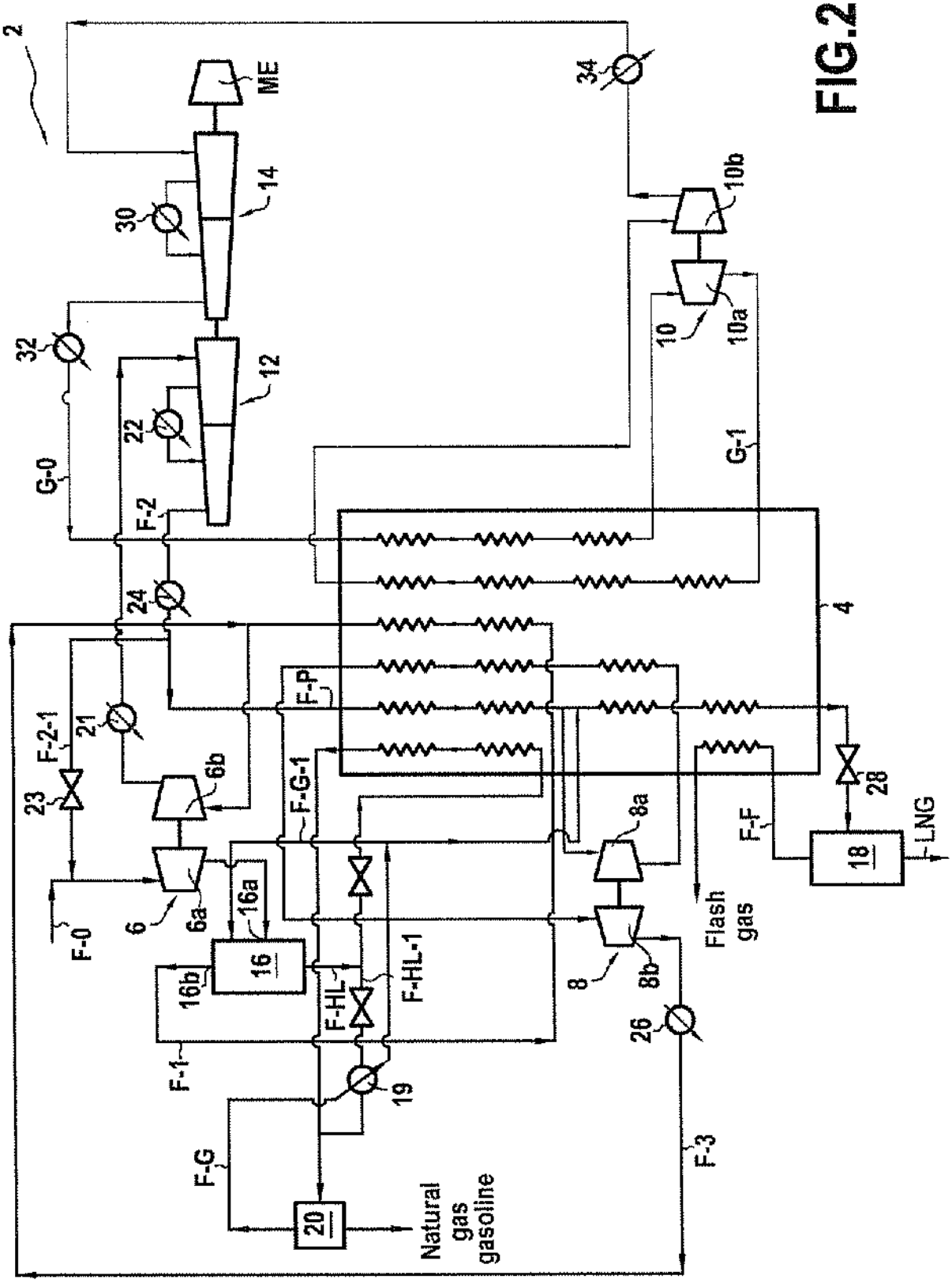
2
ME
14
30
32
12
22
G-0
F-2
24
34
10b
10
10a
G-1
4
F-P
F-2-1
21
23
6b
F-G-1
6
6a
16a
16
16b
F-0
F-HL
F-HL-1
F-1
19
F-G
20
Natural gas gasoline
8a
8
8b
26
F-3
Flash gas
F-F
28
18
LNG

FIG.2

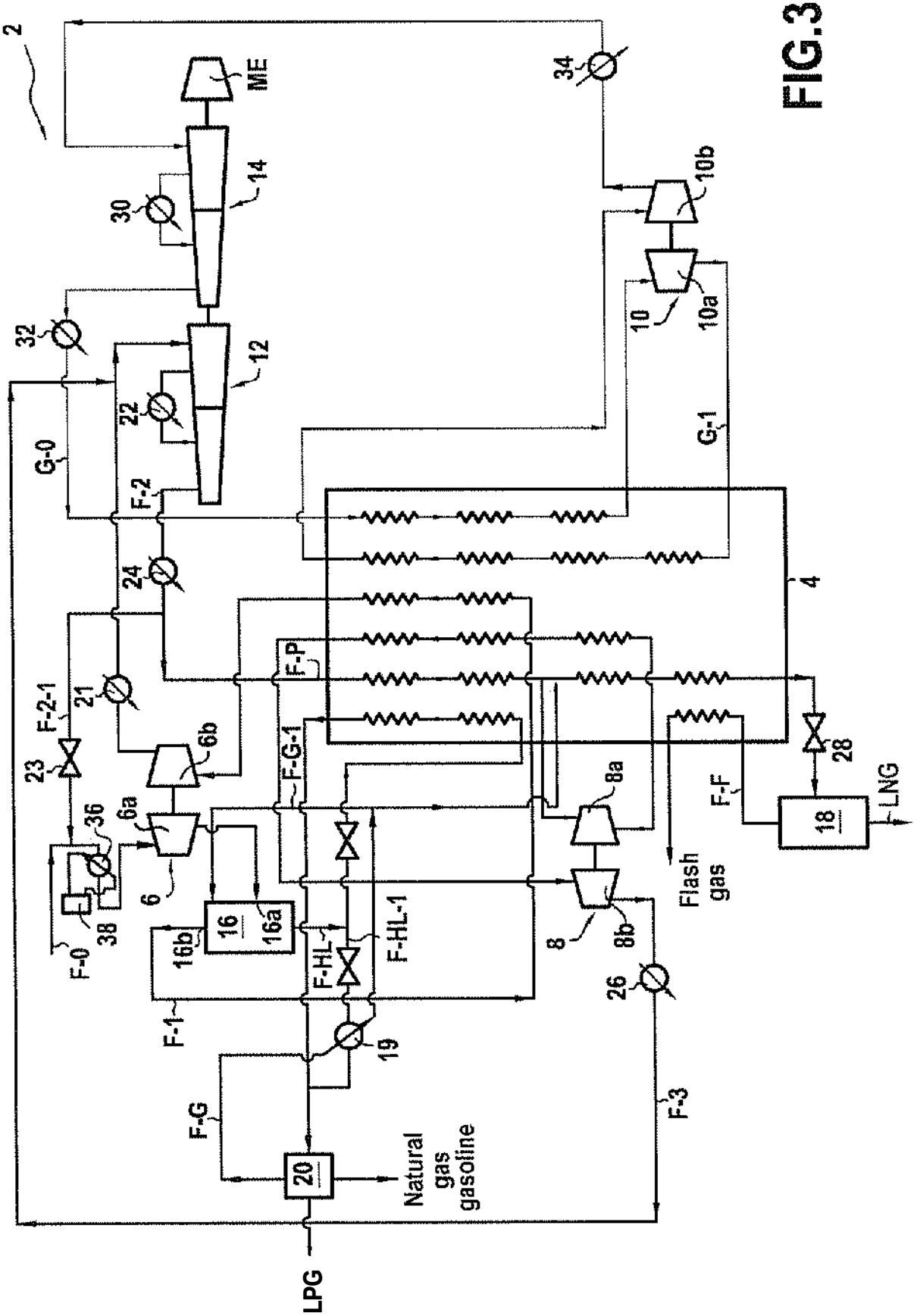
2
ME
14
30
32
12
22
G-0
F-2
24
F-2-1
21
23
6b
6a
36
6
38
F-0
16
16b
16a
F-HL
F-HL-1
F-1
19
F-G
20
Natural gas gasoline
LPG
F-P
F-G-1
34
10b
10
10a
G-1
4
8a
8
8b
26
F-3
Flash gas
28
F-F
18
LNG

FIG.3

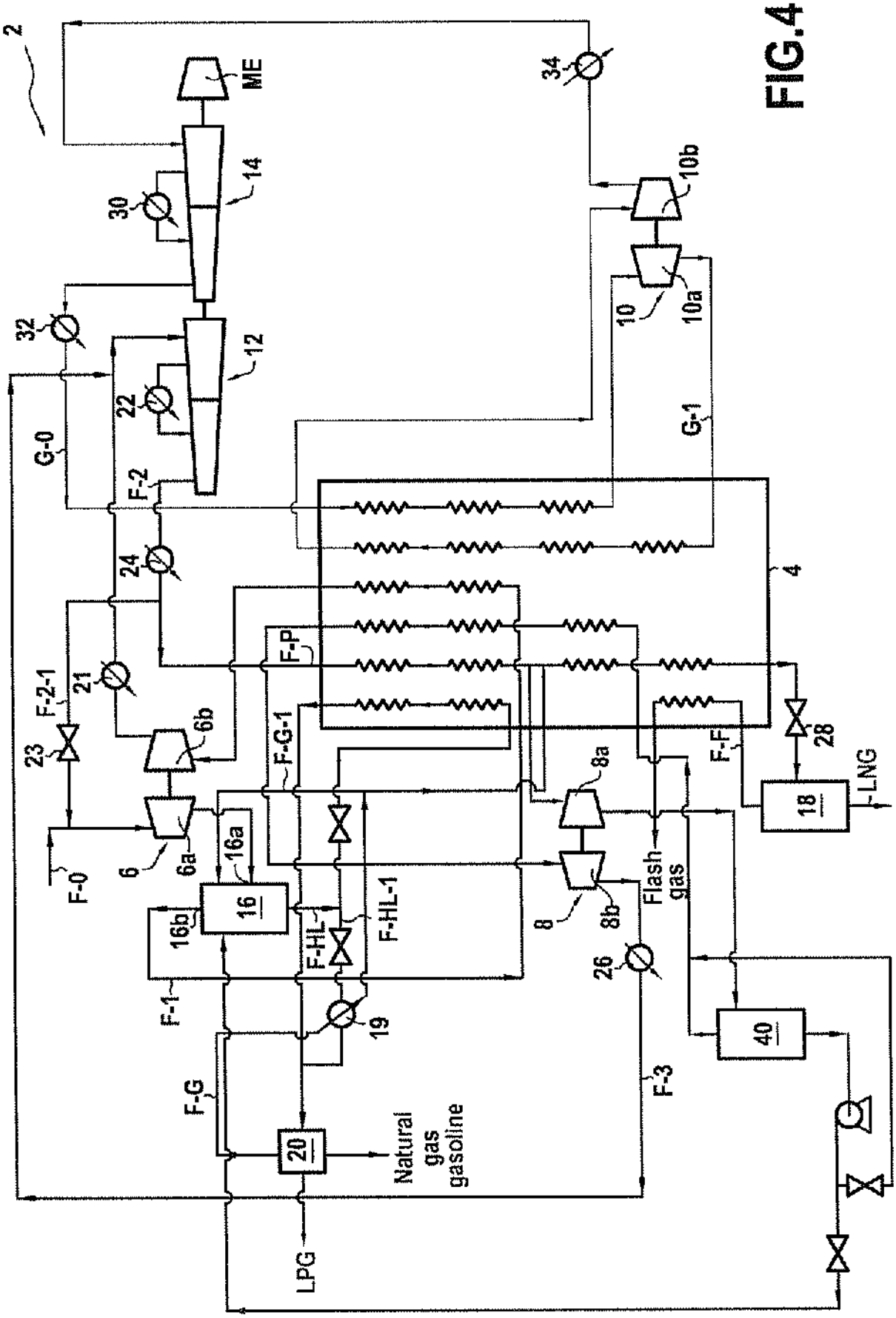
2
ME
14
30
12
32
22
G-0
F-2
24
F-2-1
21
23
6b
6
6a
16a
F-0
16
16b
F-1
F-HL
F-HL-1
19
F-G
20
Natural gas gasoline
LPG
34
10b
10
10a
G-1
4
F-P
F-G-1
8a
8
8b
Flash gas
26
F-3
40
F-F
28
18
LNG

FIG.4

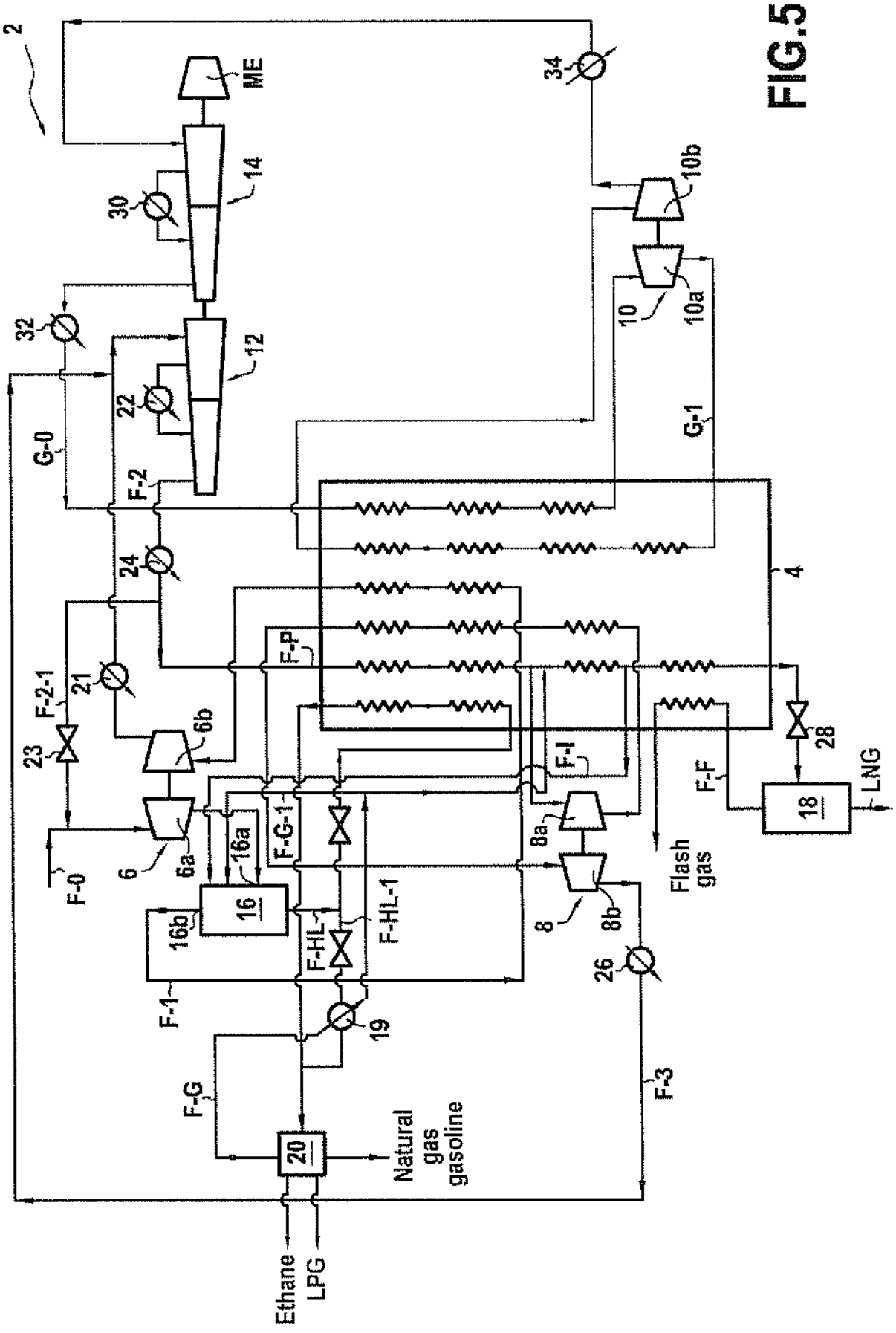
2
ME
14
12
30
32
22
34
10b
10
10a
G-1
G-0
F-2
24
4
F-P
21
F-2-1
23
6b
6
6a
16a
F-G-1
F-0
16
16b
F-HL-1
F-HL-1
F-1
19
F-G
20
Natural gas gasoline
Ethane
LPG
F-I
8a
8
8b
26
F-3
Flash gas
28
F-F
18
LNG

FIG.5