FIG.1

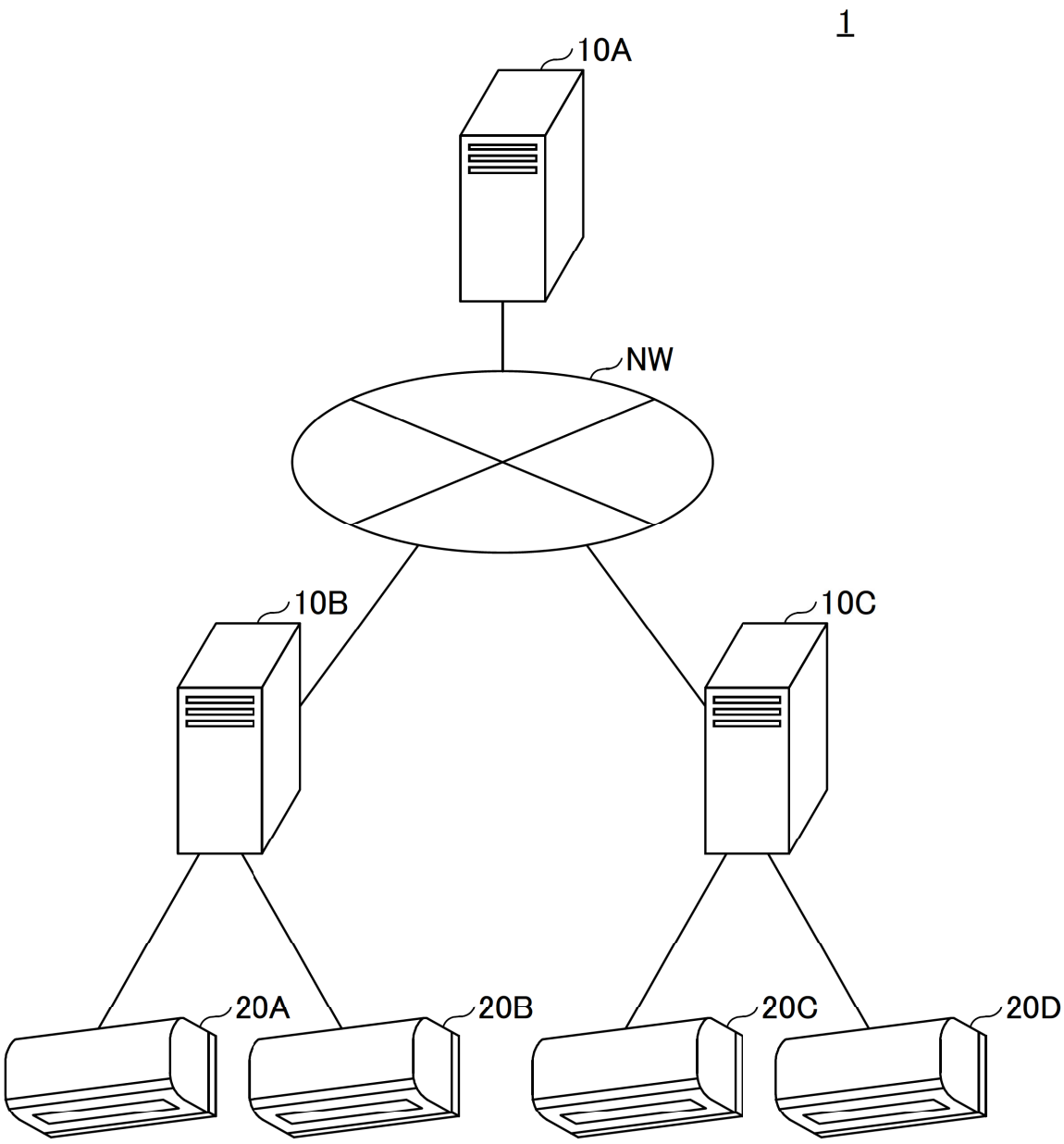

FIG.3A

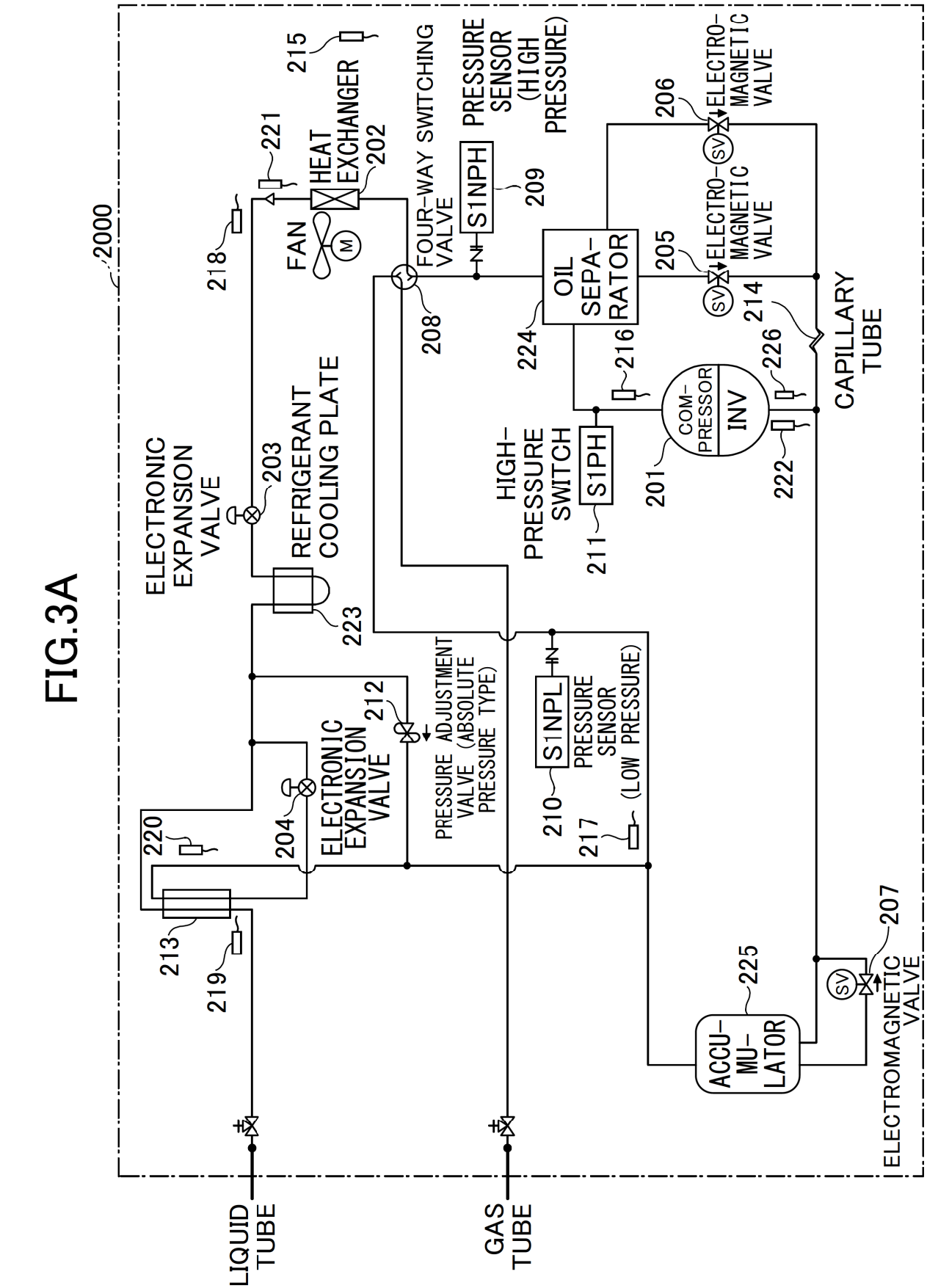
2000
ELECTRONIC EXPANSION VALVE
203
REFRIGERANT COOLING PLATE
223
ELECTRONIC EXPANSION VALVE
204
212
PRESSURE ADJUSTMENT VALVE (ABSOLUTE PRESSURE TYPE)
220
213
219
218
221
FAN
HEAT EXCHANGER
202
215
FOUR-WAY SWITCHING VALVE
208
S1NPH
PRESSURE SENSOR (HIGH PRESSURE)
209
S1NPL
PRESSURE SENSOR (LOW PRESSURE)
210
217
HIGH-PRESSURE SWITCH
S1PH
211
OIL SEPA-RATOR
224
216
COM-PRESSOR
INV
201
222
226
ACCU-MU-LATOR
225
ELECTROMAGNETIC VALVE
207
ELECTRO-MAGNETIC VALVE
205
206
CAPILLARY TUBE
214
LIQUID TUBE
GAS TUBE

FIG.4

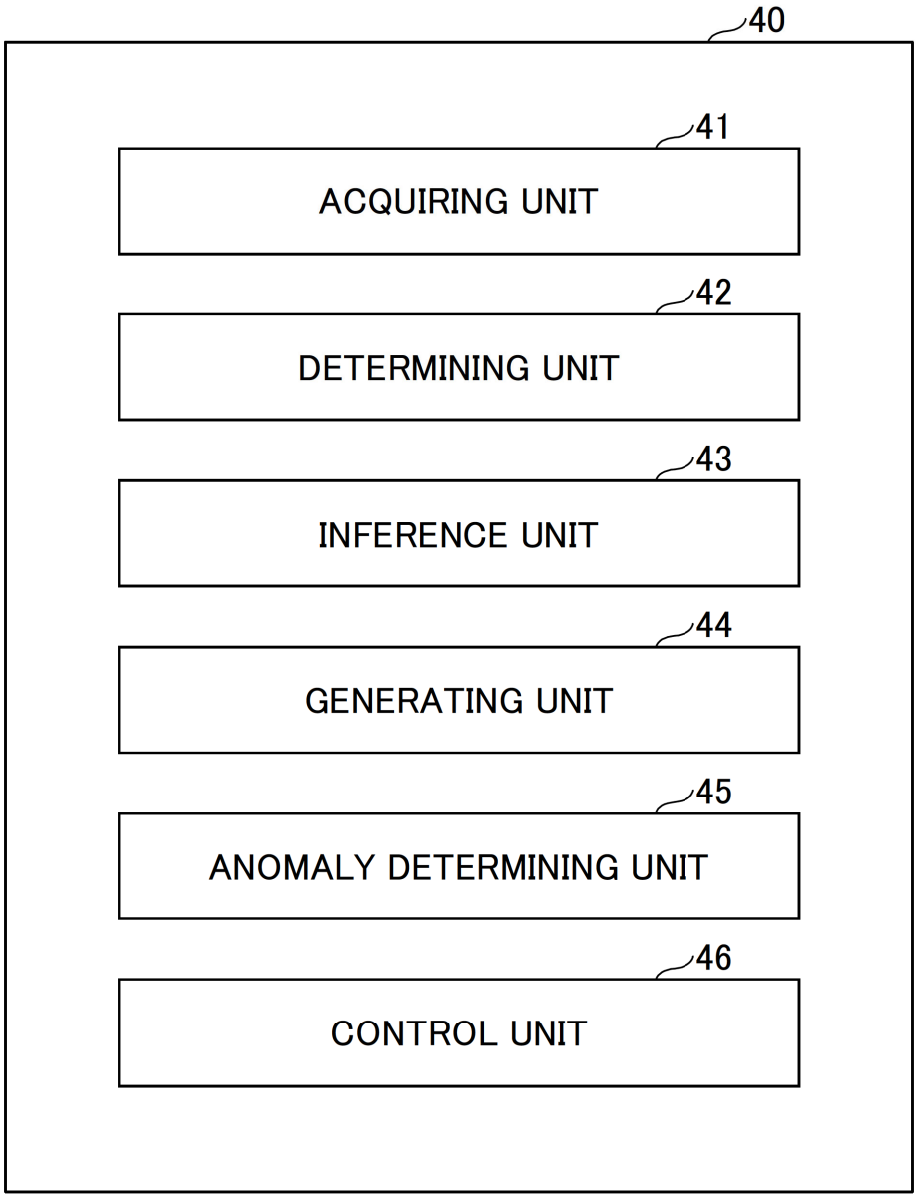
40
41
ACQUIRING UNIT
42
DETERMINING UNIT
43
INFERENCE UNIT
44
GENERATING UNIT
45
ANOMALY DETERMINING UNIT
46
CONTROL UNIT