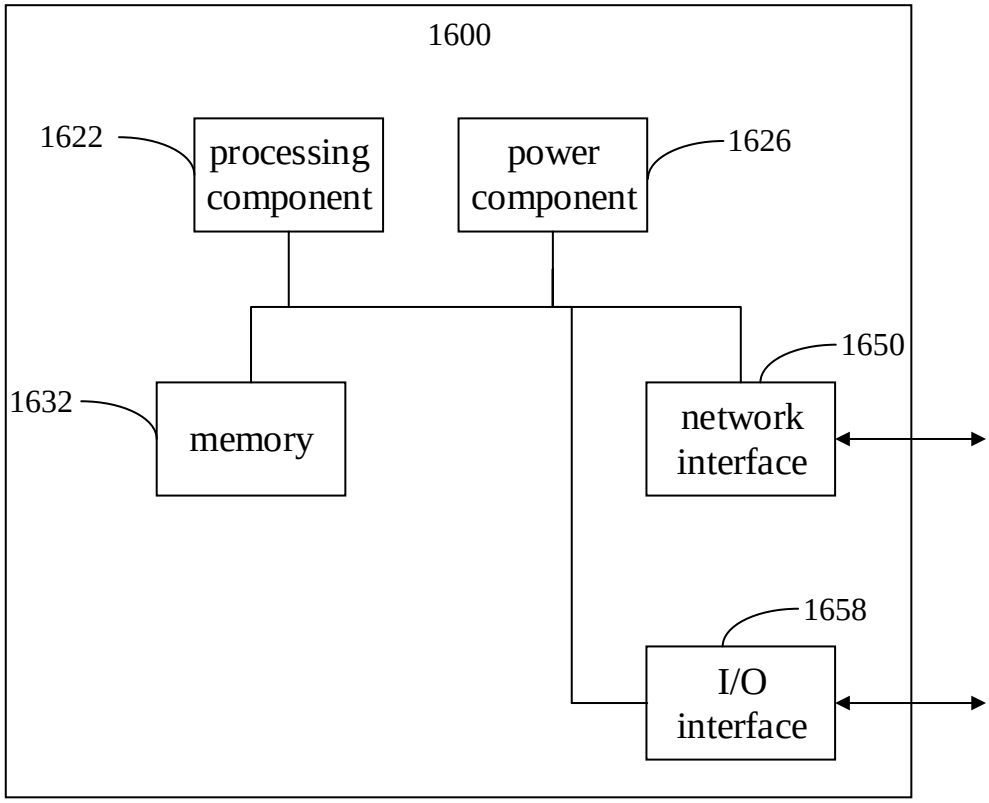
1600
1622
processing component
power component
1626
1650
1632
memory
network interface
1658
I/O interface

FIG. 16