(12) INTERNATIONAL APPLICATION PUBLISHED UNDER THE PATENT COOPERATION TREATY (PCT)

(19) World Intellectual Property Organization
International Bureau

(43) International Publication Date
11 July 2013 (11.07.2013)

WIPO | PCT

(10) International Publication Number
WO 2013/102611 A2

(51) International Patent Classification: Not classified

(21) International Application Number:
PCT/EP2012/077084

(22) International Filing Date:
28 December 2012 (28.12.2012)

(25) Filing Language: English

(26) Publication Language: English

(30) Priority Data:

12150114.2	3 January 2012 (03.01.2012)	EP
12155245.9	13 February 2012 (13.02.2012)	EP
12155254.1	13 February 2012 (13.02.2012)	EP
12155252.5	13 February 2012 (13.02.2012)	EP
12155258.2	13 February 2012 (13.02.2012)	EP
12155241.8	13 February 2012 (13.02.2012)	EP

(71) Applicant: **PHILIP MORRIS PRODUCTS S.A.** [CH/CH]; Quai Jeanrenaud 3, CH-2000 Neuchatel (CH).

(72) Inventors: **GREIM, Olivier**; Chemin Des Sources, CH-1423 Villars-Burquin (CH). **PLOJOUX, Julien**; Rue Micheli-du-Crest 22, CH-1205 Geneva (CH). **RUSCIO, Dani**; Route de Troub 29, CH-2088 Cressier (CH). **MANCA, Laurent**; Chemin de la Thioleyre 1, CH-1091 Grandvaux (CH).

(74) Agent: **REDDIE & GROSE LLP**; 16 Theobalds Road, London Greater London WC1X 8PL (GB).

(81) Designated States *(unless otherwise indicated, for every kind of national protection available)*: AE, AG, AL, AM, AO, AT, AU, AZ, BA, BB, BG, BH, BN, BR, BW, BY, BZ, CA, CH, CL, CN, CO, CR, CU, CZ, DE, DK, DM, DO, DZ, EC, EE, EG, ES, FI, GB, GD, GE, GH, GM, GT, HN, HR, HU, ID, IL, IN, IS, JP, KE, KG, KM, KN, KP, KR, KZ, LA, LC, LK, LR, LS, LT, LU, LY, MA, MD, ME, MG, MK, MN, MW, MX, MY, MZ, NA, NG, NI, NO, NZ, OM, PA, PE, PG, PH, PL, PT, QA, RO, RS, RU, RW, SC, SD, SE, SG, SK, SL, SM, ST, SV, SY, TH, TJ, TM, TN, TR, TT, TZ, UA, UG, US, UZ, VC, VN, ZA, ZM, ZW.

(84) Designated States *(unless otherwise indicated, for every kind of regional protection available)*: ARIPO (BW, GH, GM, KE, LR, LS, MW, MZ, NA, RW, SD, SL, SZ, TZ, UG, ZM, ZW), Eurasian (AM, AZ, BY, KG, KZ, RU, TJ, TM), European (AL, AT, BE, BG, CH, CY, CZ, DE, DK, EE, ES, FI, FR, GB, GR, HR, HU, IE, IS, IT, LT, LU, LV, MC, MK, MT, NL, NO, PL, PT, RO, RS, SE, SI, SK, SM, TR), OAPI (BF, BJ, CF, CG, CI, CM, GA, GN, GQ, GW, ML, MR, NE, SN, TD, TG).

Published:

— *without international search report and to be republished upon receipt of that report (Rule 48.2(g))*

(54) Title: AEROSOL-GENERATING DEVICE AND SYSTEM

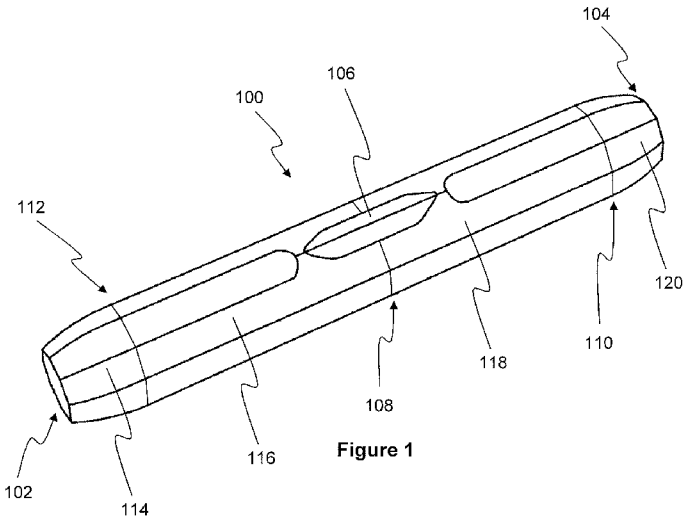

Figure 1

(57) Abstract: The present disclosure relates to an electrical system comprising a primary device and secondary device. The primary device comprises: a source of electrical power; a cavity configured to receive the secondary device; at least one electrical contact within the cavity configured to contact a corresponding contact on the secondary device when the secondary device is in the cavity, the at least one electrical contact being electrically connected to the source of electrical power; and at least one data contact configured to transfer data between the primary device and the secondary device; wherein, the secondary device is keyed to the cavity of the primary device. The secondary device may be an aerosol- generating device, and the primary device may be a charging device for charging the aerosol-generating device. The secondary device may have a polygonal cross-sectional shape.

WO 2013/102611 A2