FIG. 1

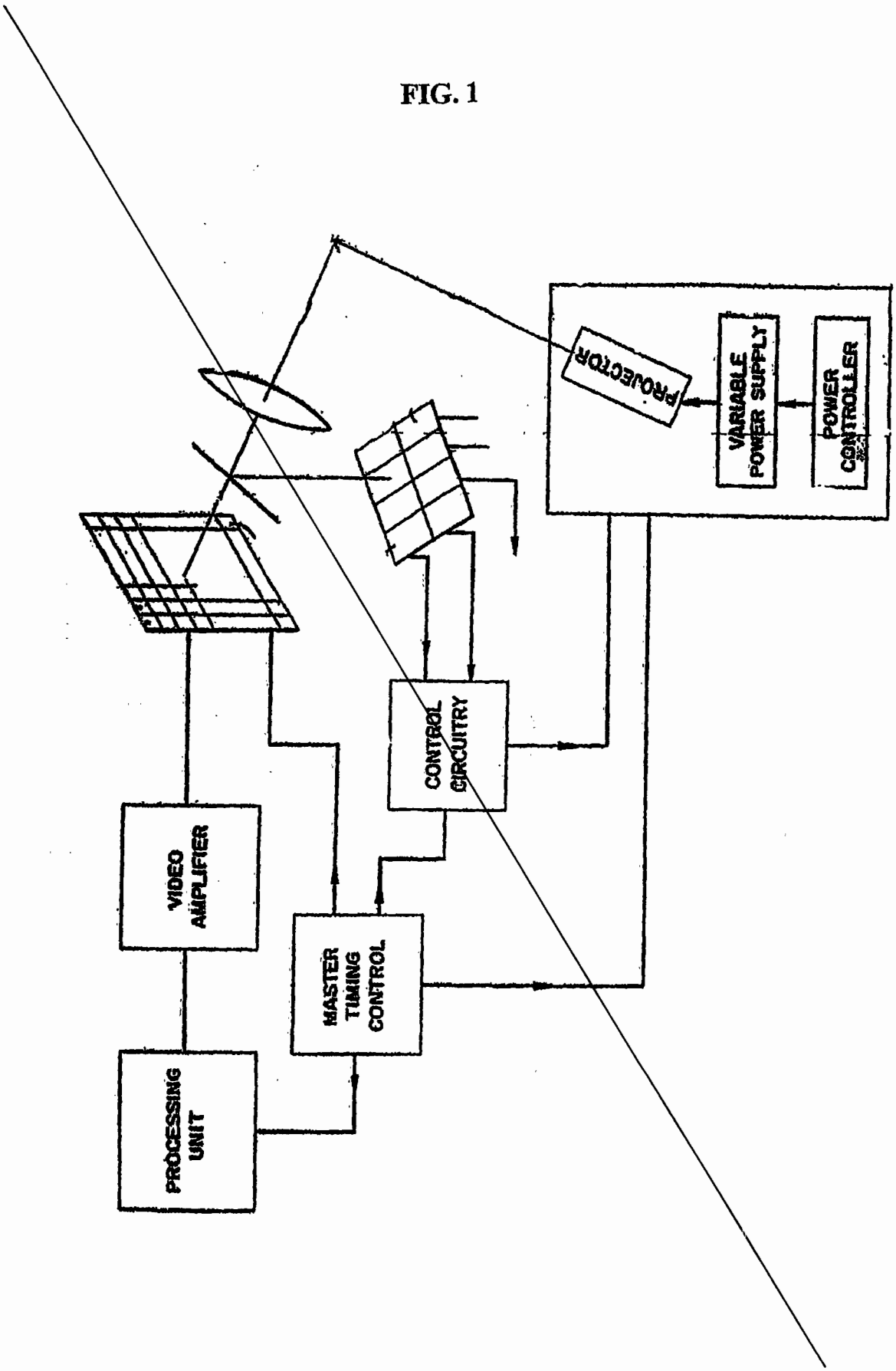
PROJECTOR
VARIABLE POWER SUPPLY
POWER CONTROLLER
CONTROL CIRCUITRY
VIDEO AMPLIFIER
MASTER TIMING CONTROL
PROCESSING UNIT

FIG. 2

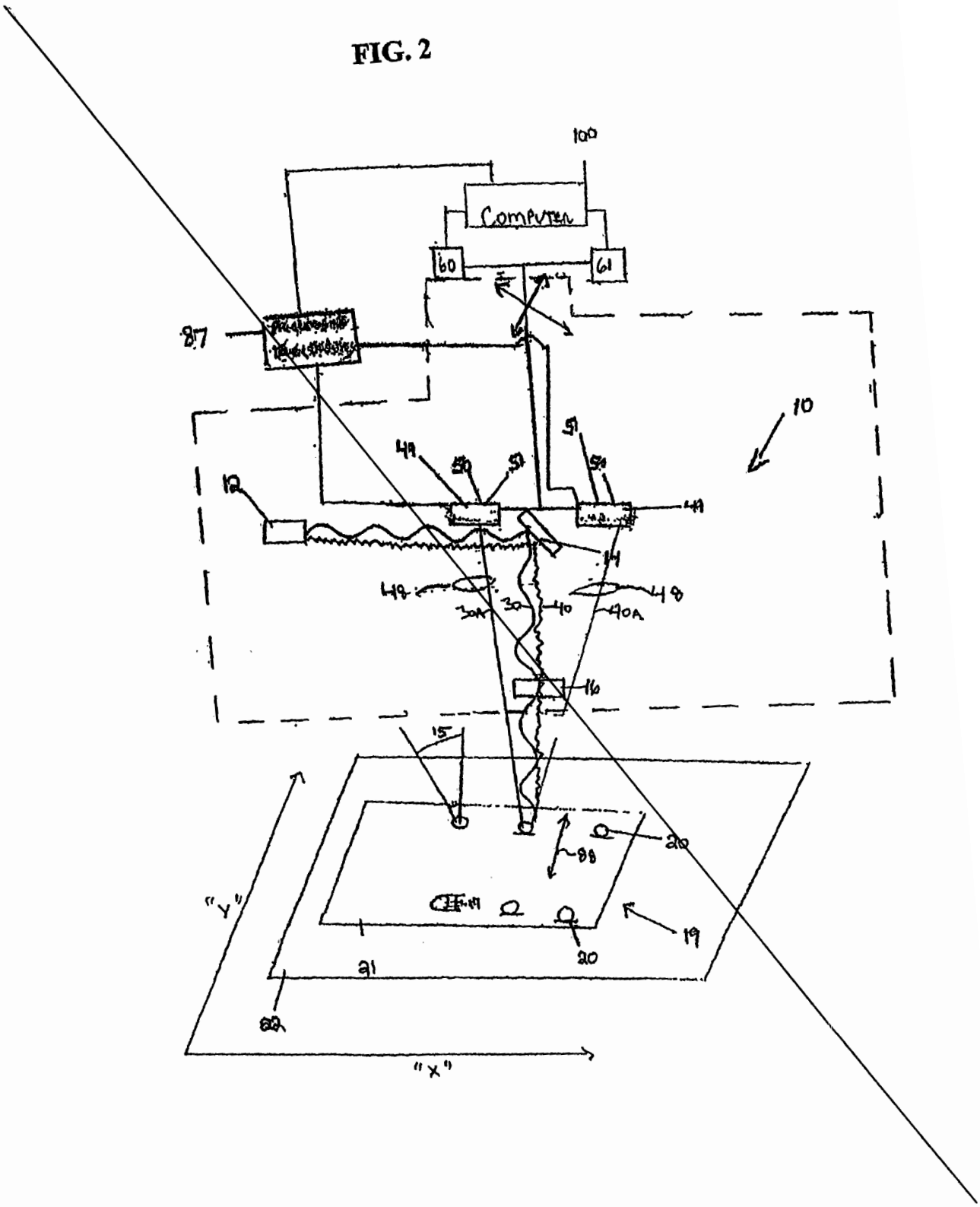
100
Computer
60
61
87
10
12
49
50
51
51
50
49
14
48
30A
30
40
40A
48
16
15
20
88
19
20
21
22
"Y"
"X"

FIG. 3

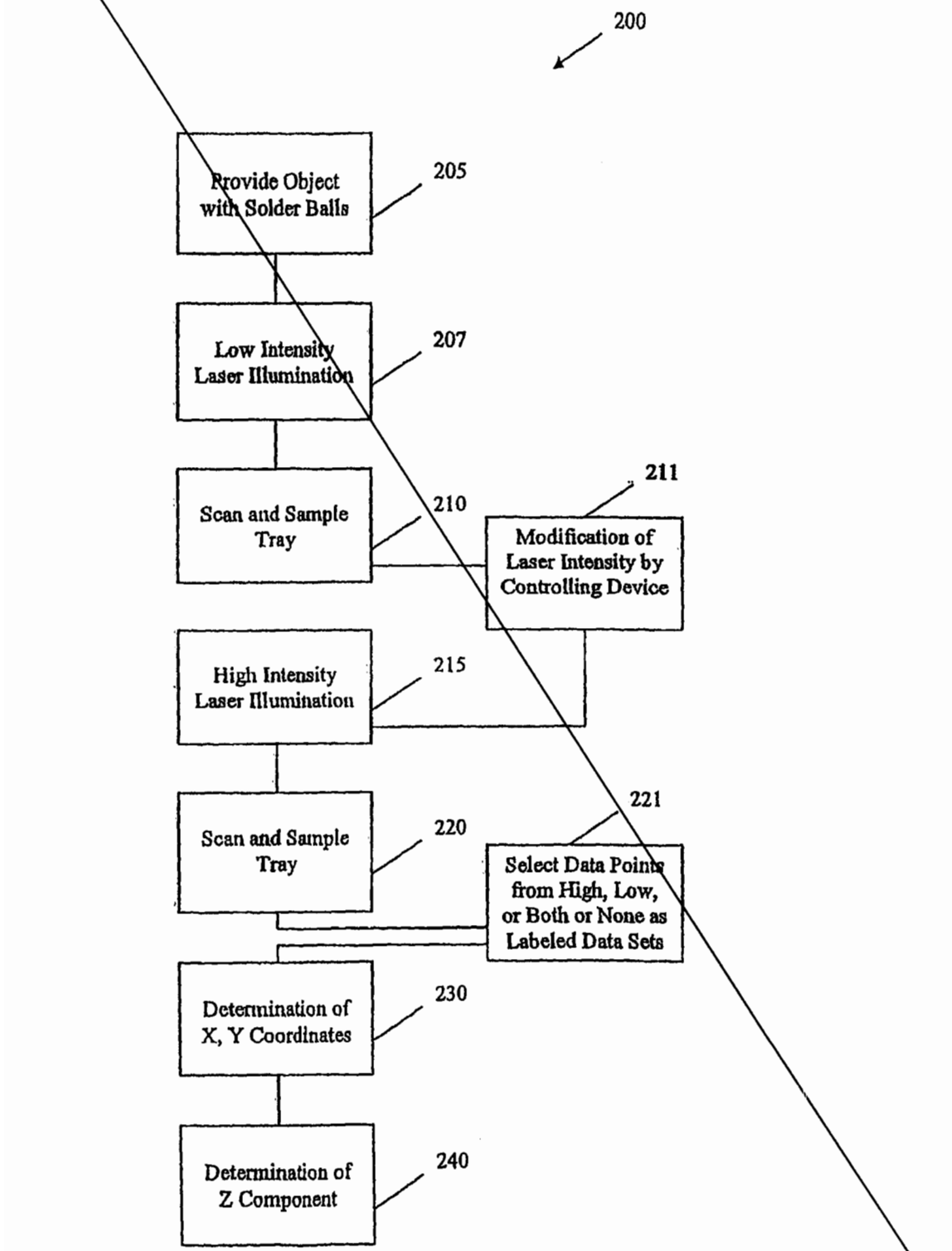
200
Provide Object with Solder Balls
205
Low Intensity Laser Illumination
207
Scan and Sample Tray
210
211
Modification of Laser Intensity by Controlling Device
High Intensity Laser Illumination
215
Scan and Sample Tray
220
221
Select Data Points from High, Low, or Both or None as Labeled Data Sets
Determination of X, Y Coordinates
230
Determination of Z Component
240

FIG. 4

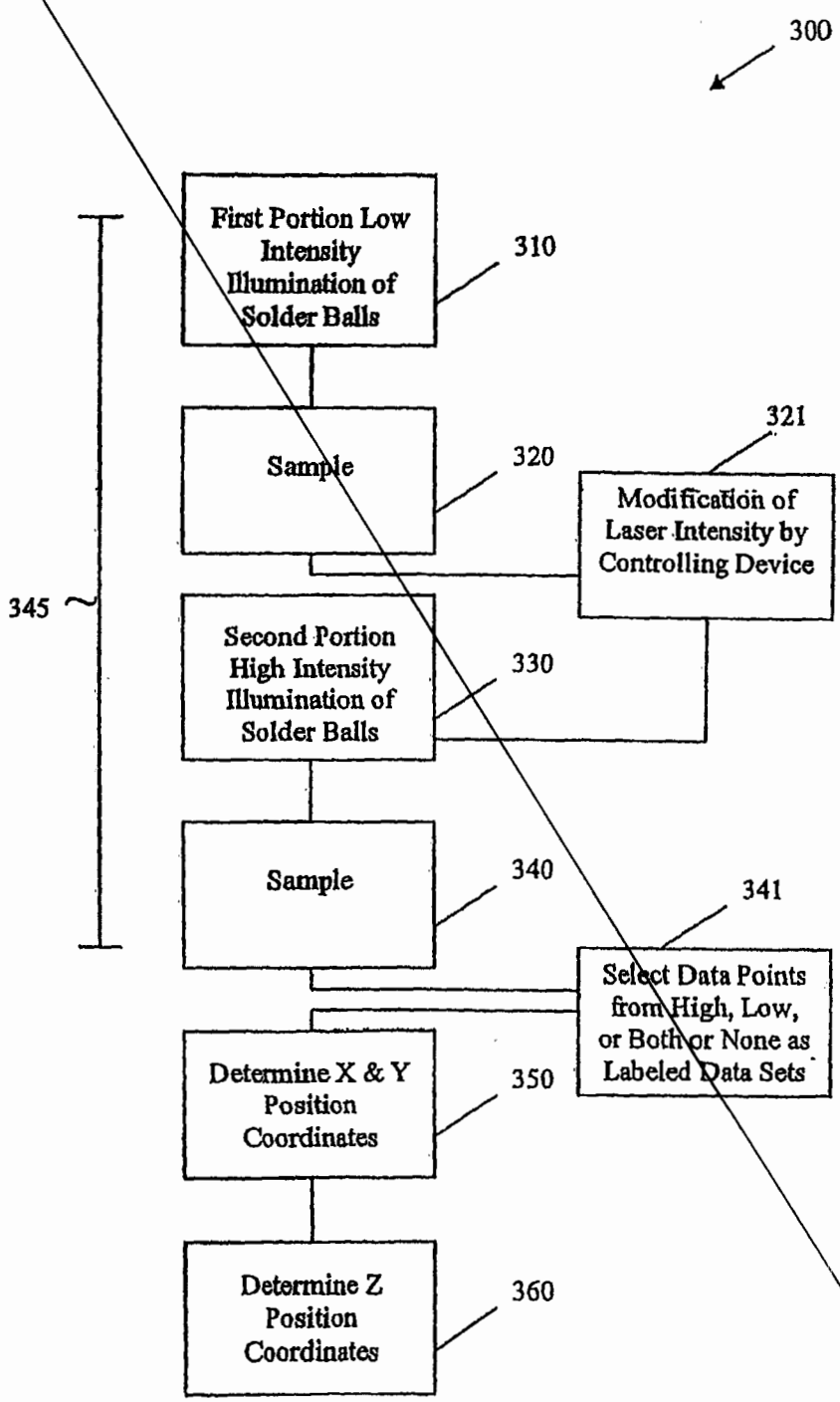
300
First Portion Low Intensity Illumination of Solder Balls
310
Sample
320
321
Modification of Laser Intensity by Controlling Device
345
Second Portion High Intensity Illumination of Solder Balls
330
Sample
340
341
Select Data Points from High, Low, or Both or None as Labeled Data Sets
Determine X & Y Position Coordinates
350
Determine Z Position Coordinates
360

FIG. 5

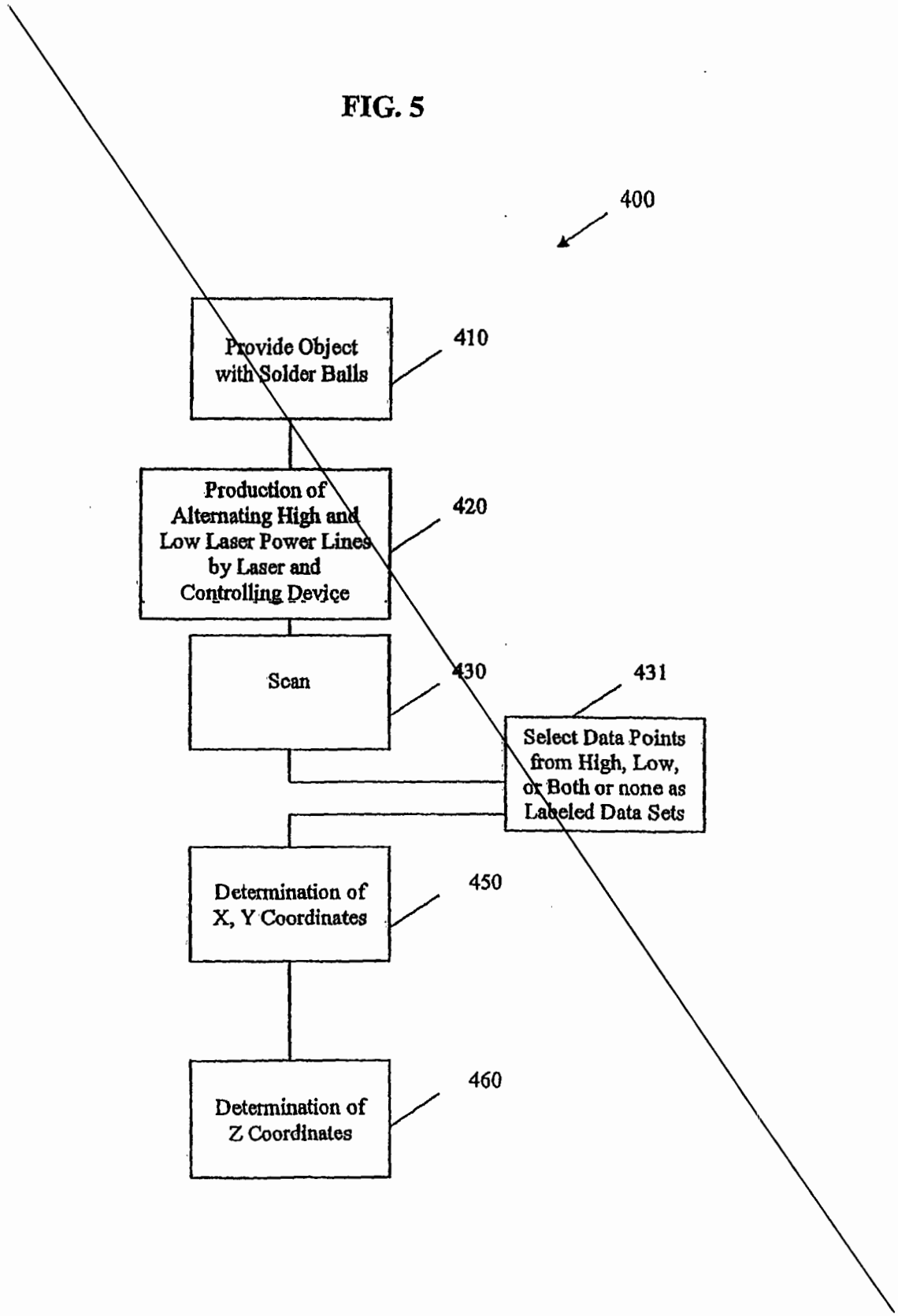
400
Provide Object with Solder Balls
410
Production of Alternating High and Low Laser Power Lines by Laser and Controlling Device
420
Scan
430
431
Select Data Points from High, Low, or Both or none as Labeled Data Sets
Determination of X, Y Coordinates
450
Determination of Z Coordinates
460

FIG. 6

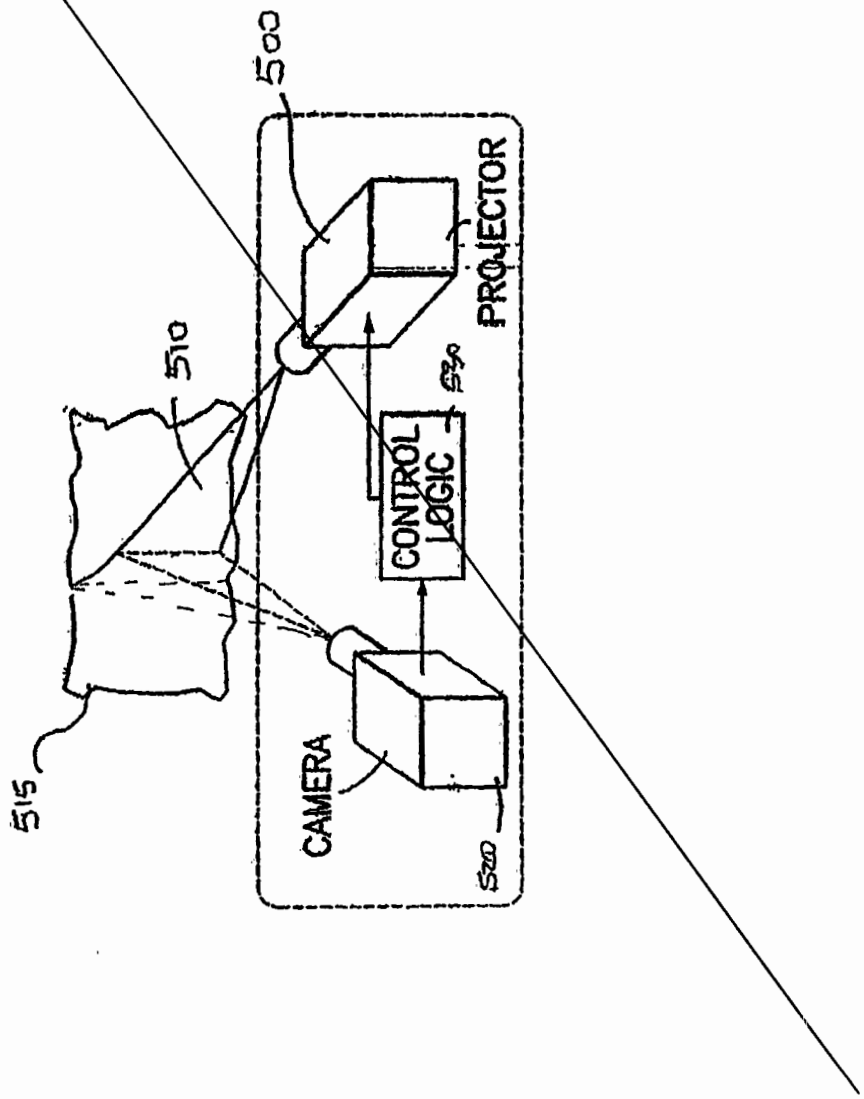

FIG. 7

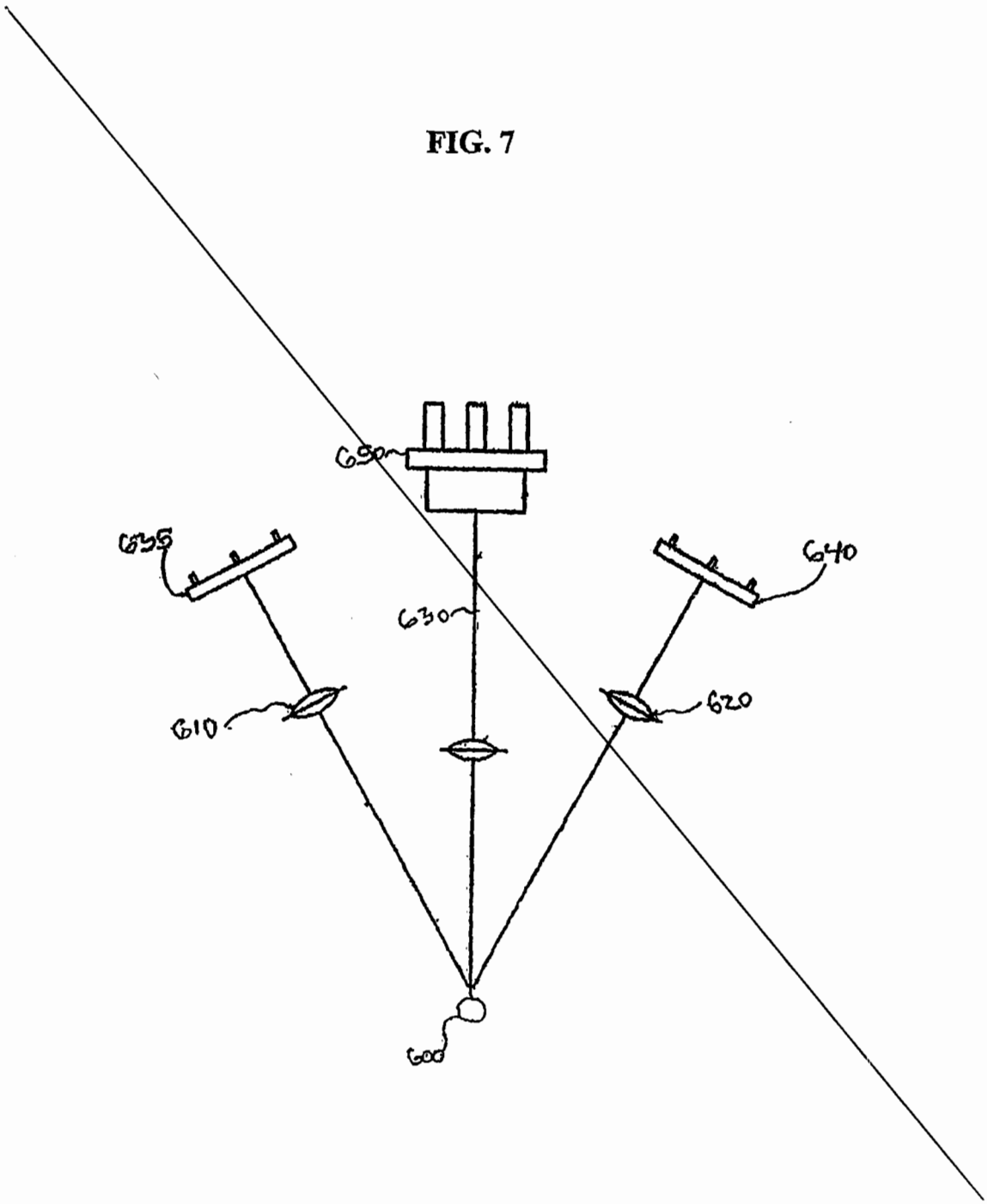

FIG. 8

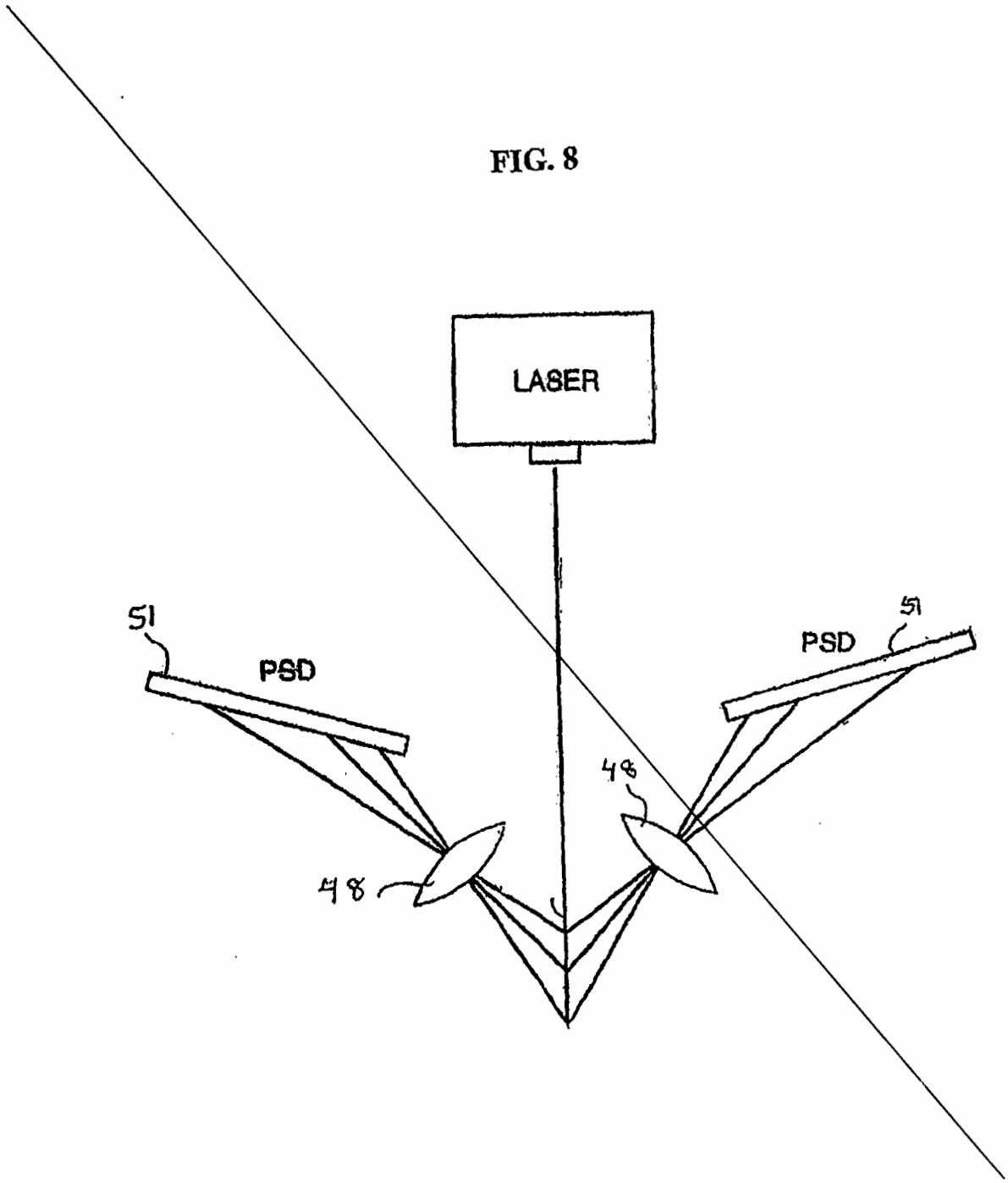

FIG. 9

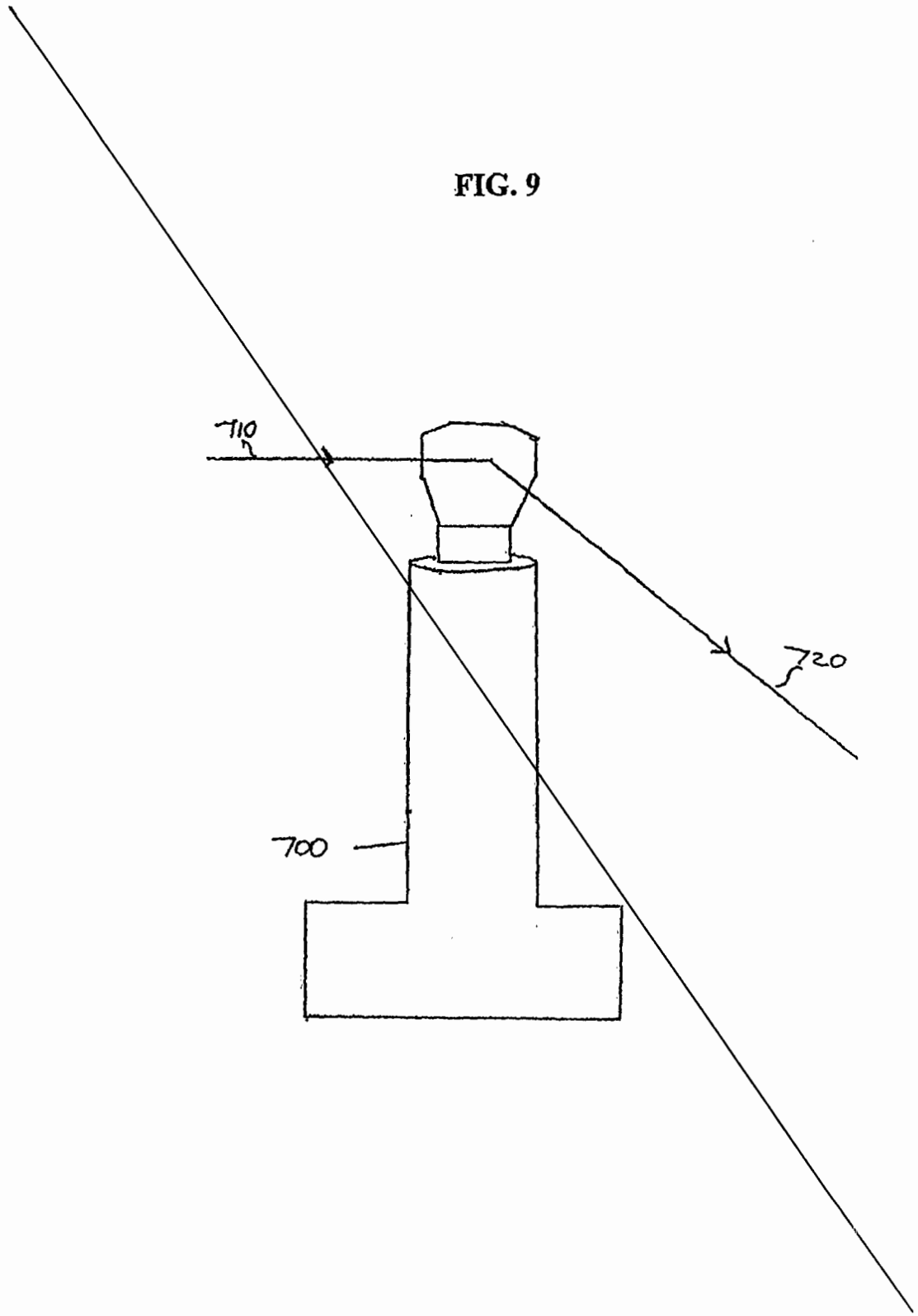

FIG. 10

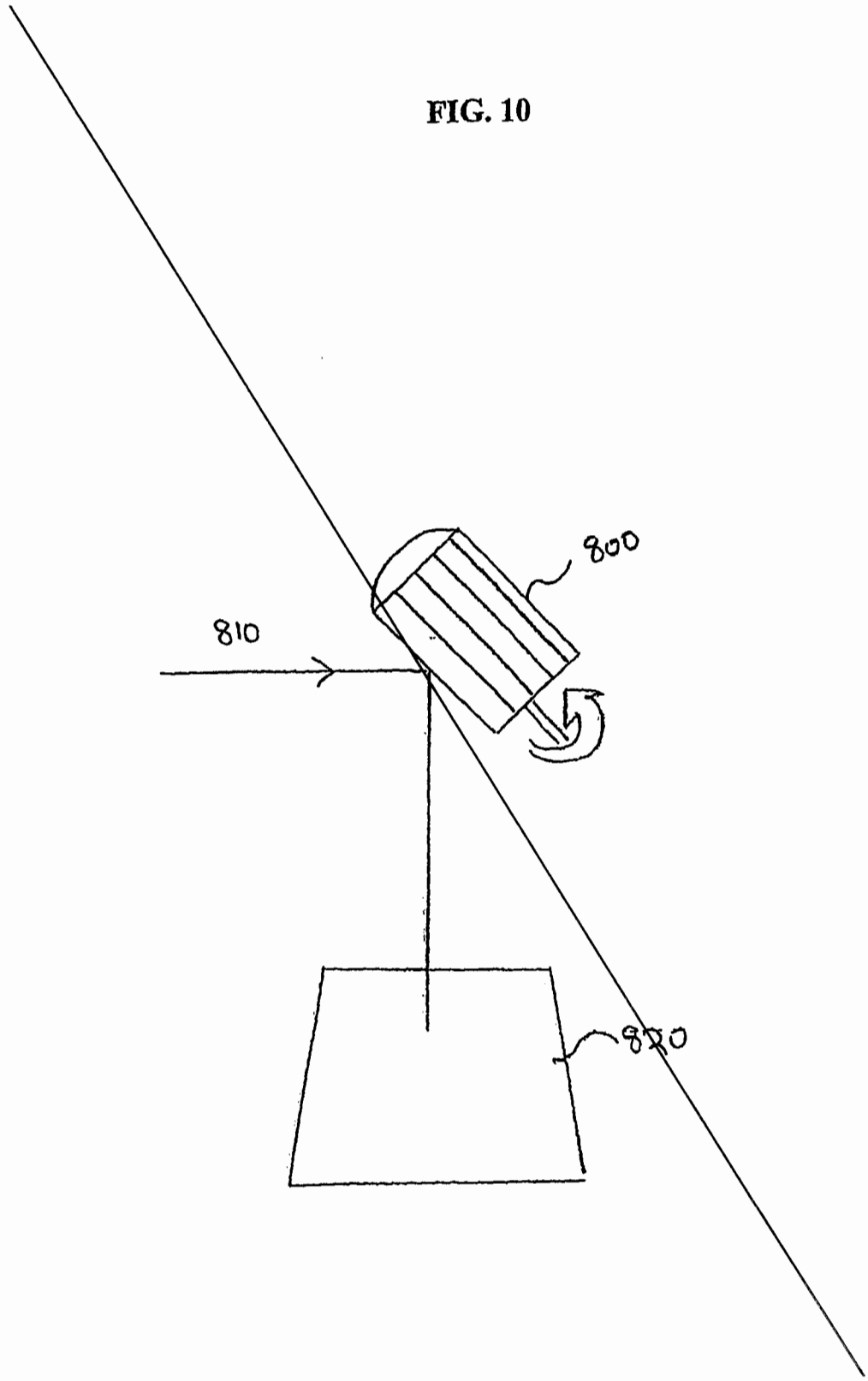

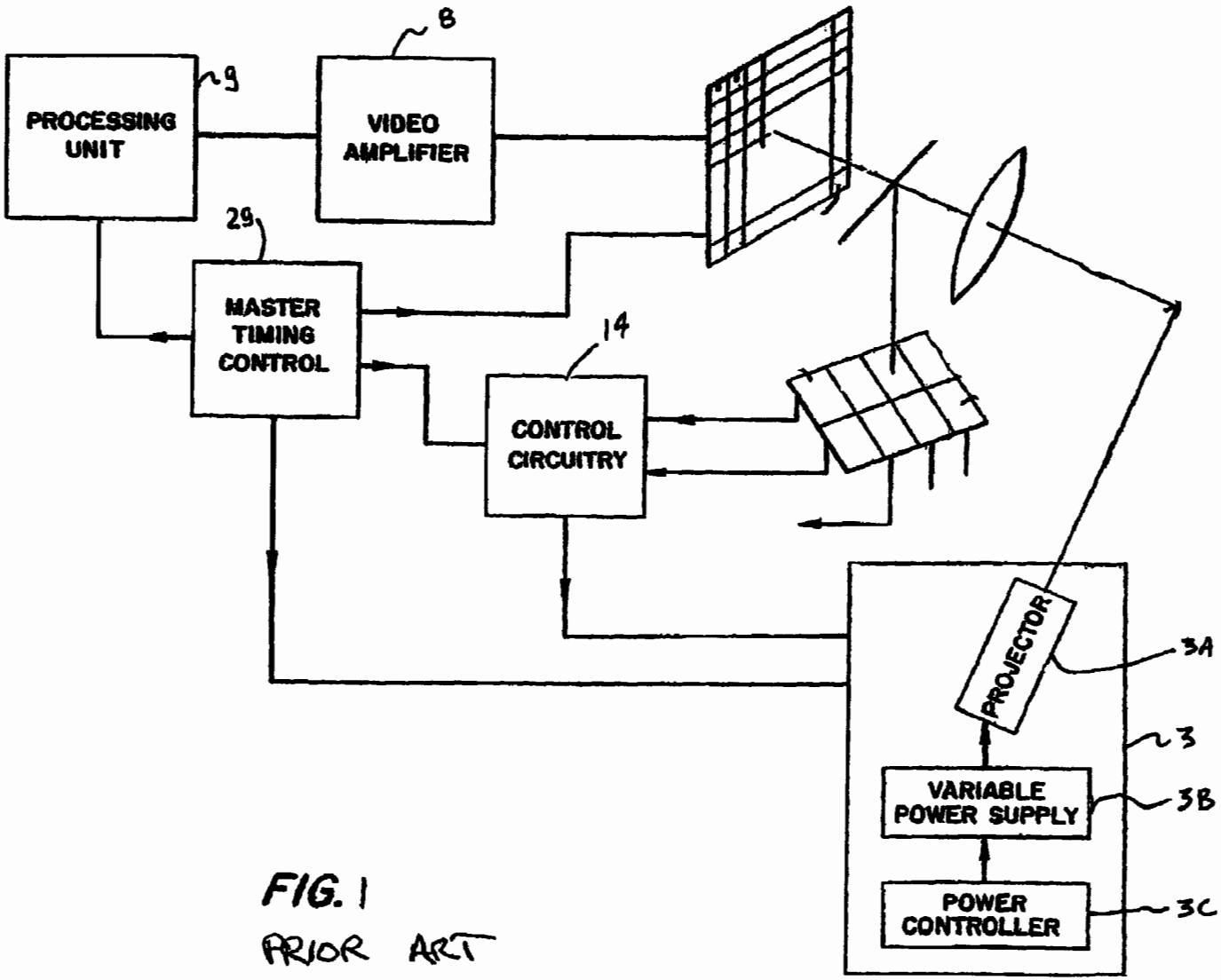

FIG. 1
PRIOR ART

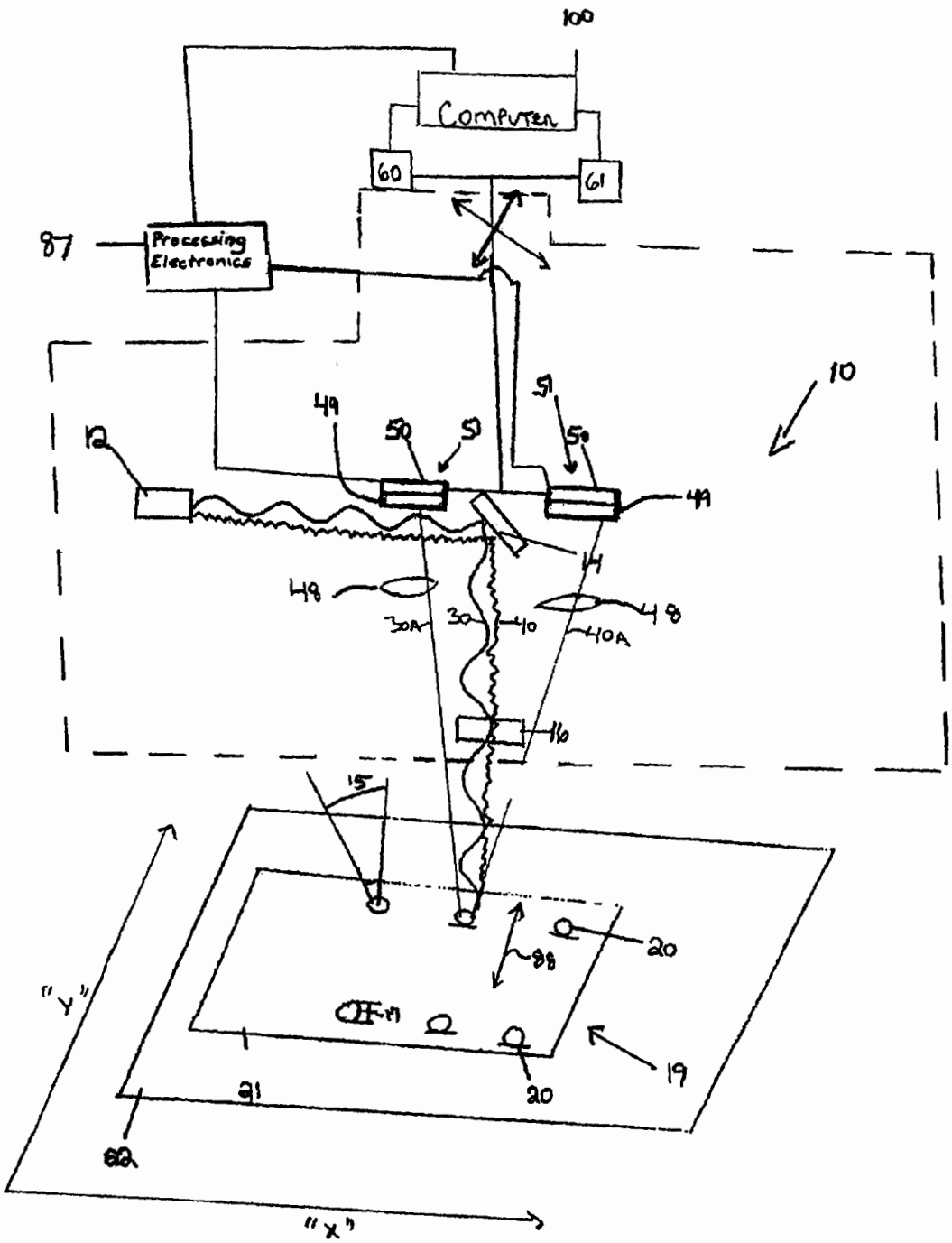
100
Computer
60
61
87
Processing Electronics
10
12
49
50
51
59
47
14
48
30A
30
40
40A
16
15
20
98
"Y"
91
92
19
"X"

FIG. 2

FIG. 3

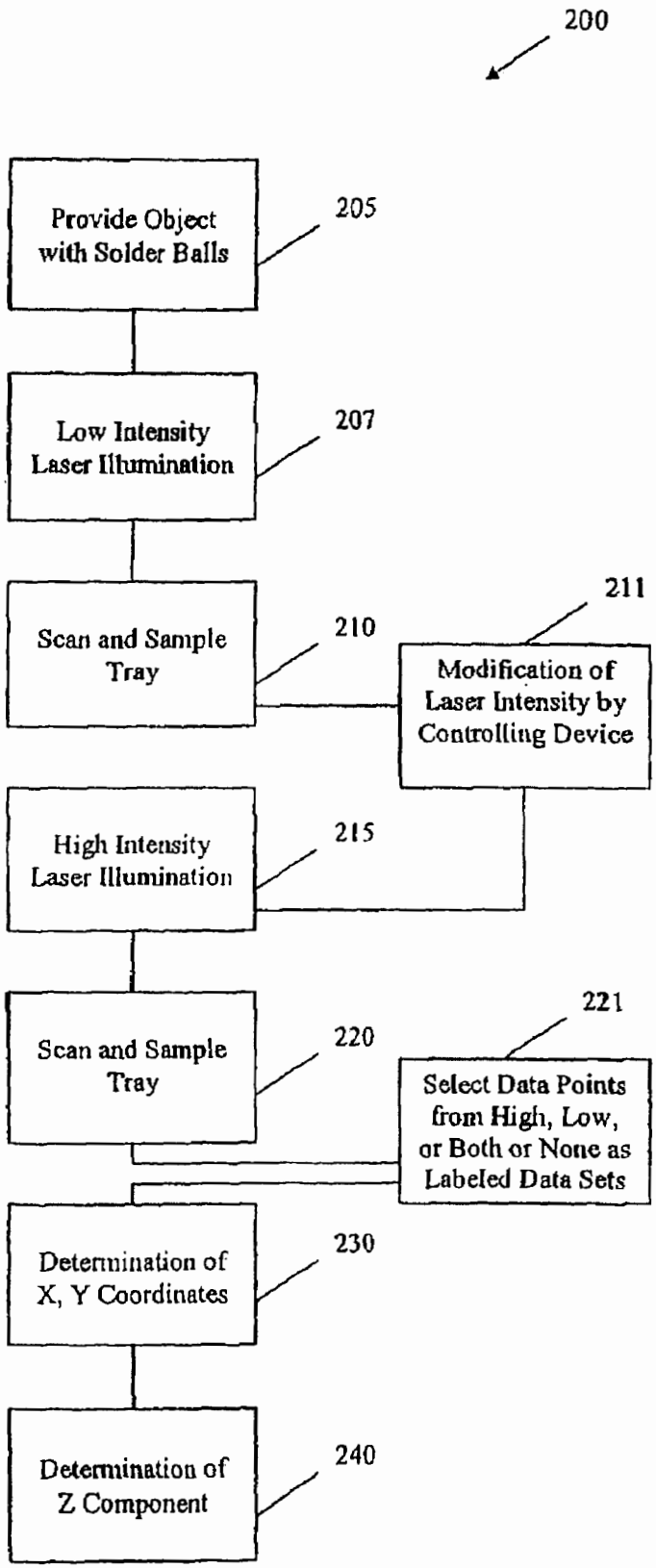
200
Provide Object with Solder Balls
205
Low Intensity Laser Illumination
207
Scan and Sample Tray
210
211
Modification of Laser Intensity by Controlling Device
High Intensity Laser Illumination
215
Scan and Sample Tray
220
221
Select Data Points from High, Low, or Both or None as Labeled Data Sets
Determination of X, Y Coordinates
230
Determination of Z Component
240

FIG. 4

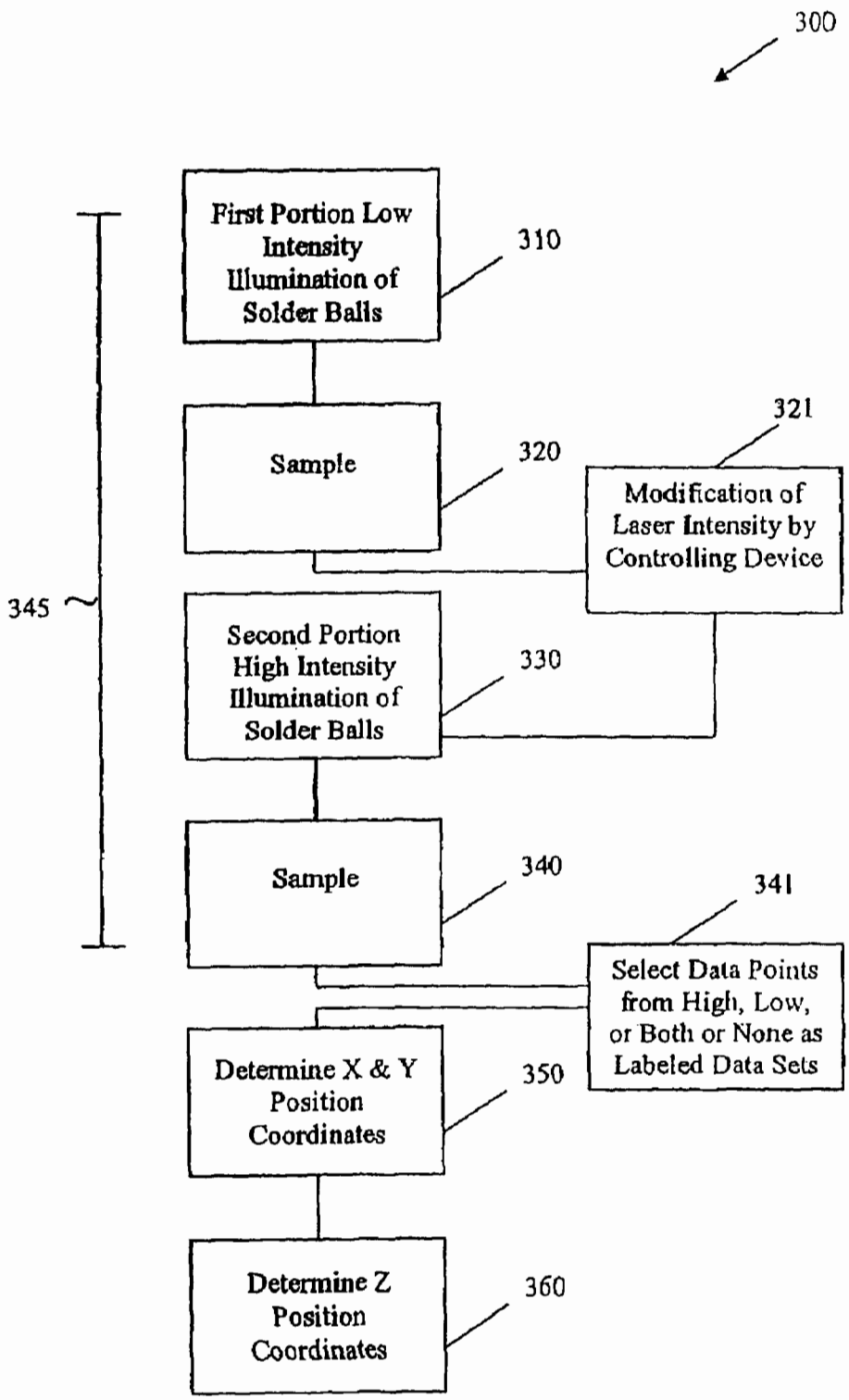
300
First Portion Low Intensity Illumination of Solder Balls
310
Sample
320
321
Modification of Laser Intensity by Controlling Device
345
Second Portion High Intensity Illumination of Solder Balls
330
Sample
340
341
Select Data Points from High, Low, or Both or None as Labeled Data Sets
Determine X & Y Position Coordinates
350
Determine Z Position Coordinates
360

FIG. 5

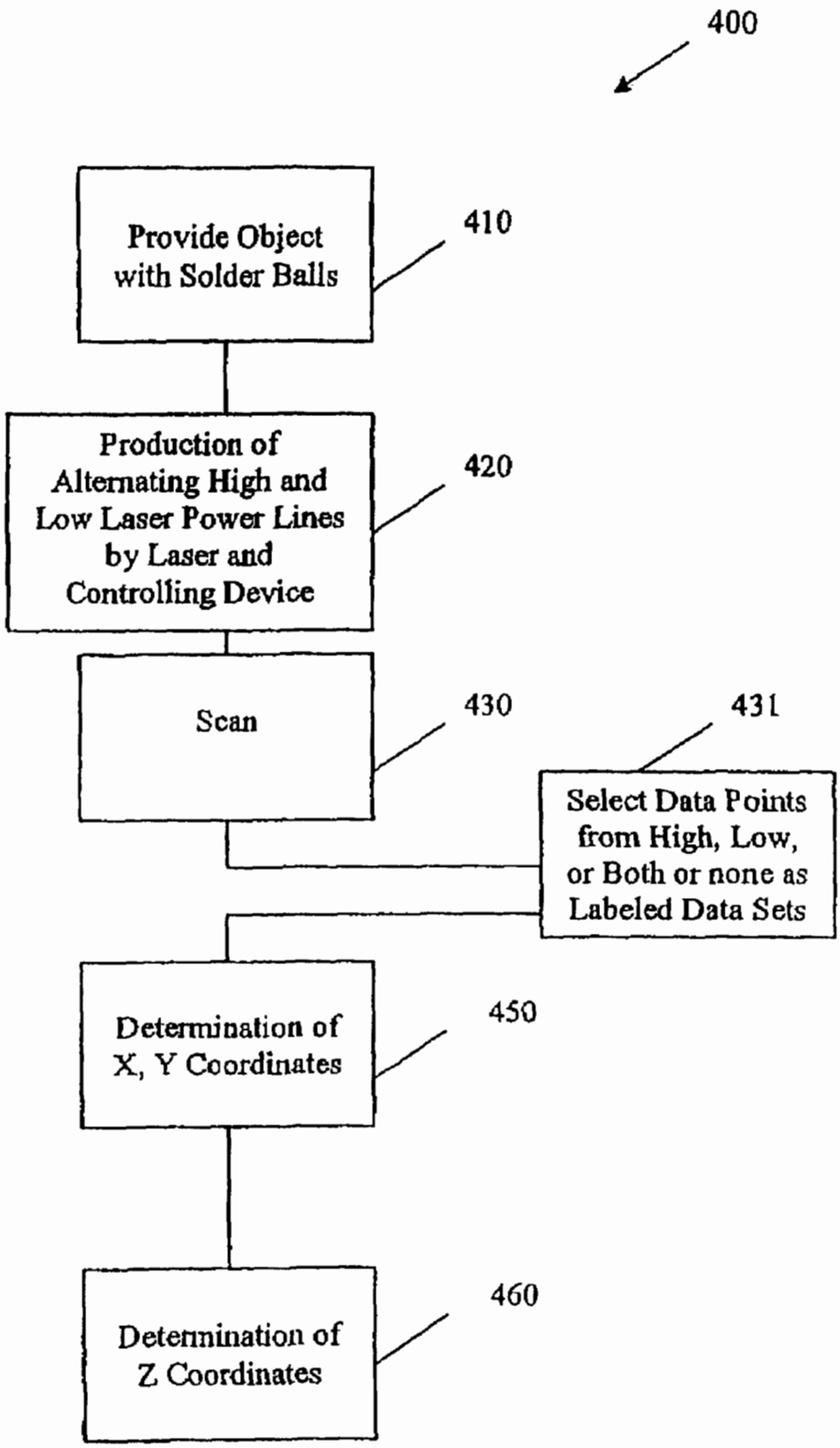
400
Provide Object with Solder Balls
410
Production of Alternating High and Low Laser Power Lines by Laser and Controlling Device
420
Scan
430
431
Select Data Points from High, Low, or Both or none as Labeled Data Sets
Determination of X, Y Coordinates
450
Determination of Z Coordinates
460

FIG. 6

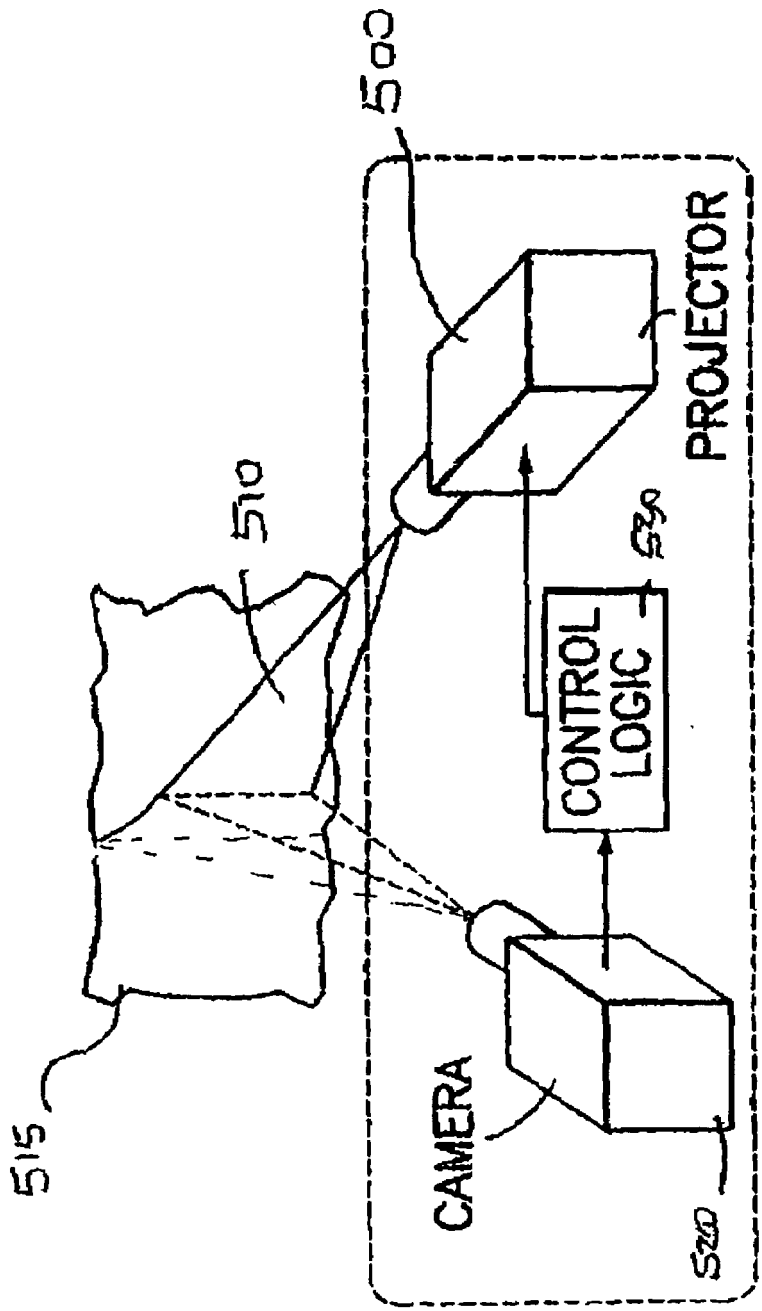

FIG. 7

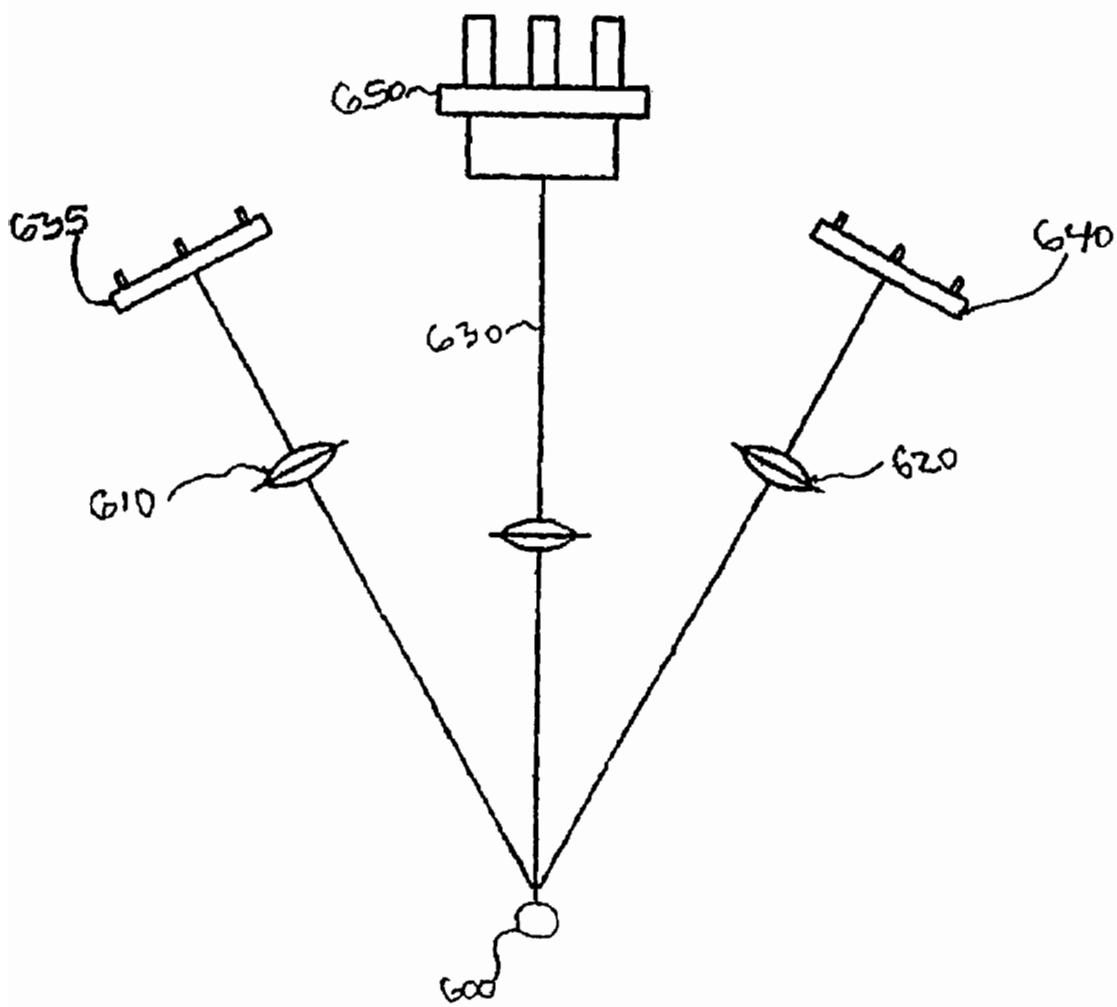

FIG. 8

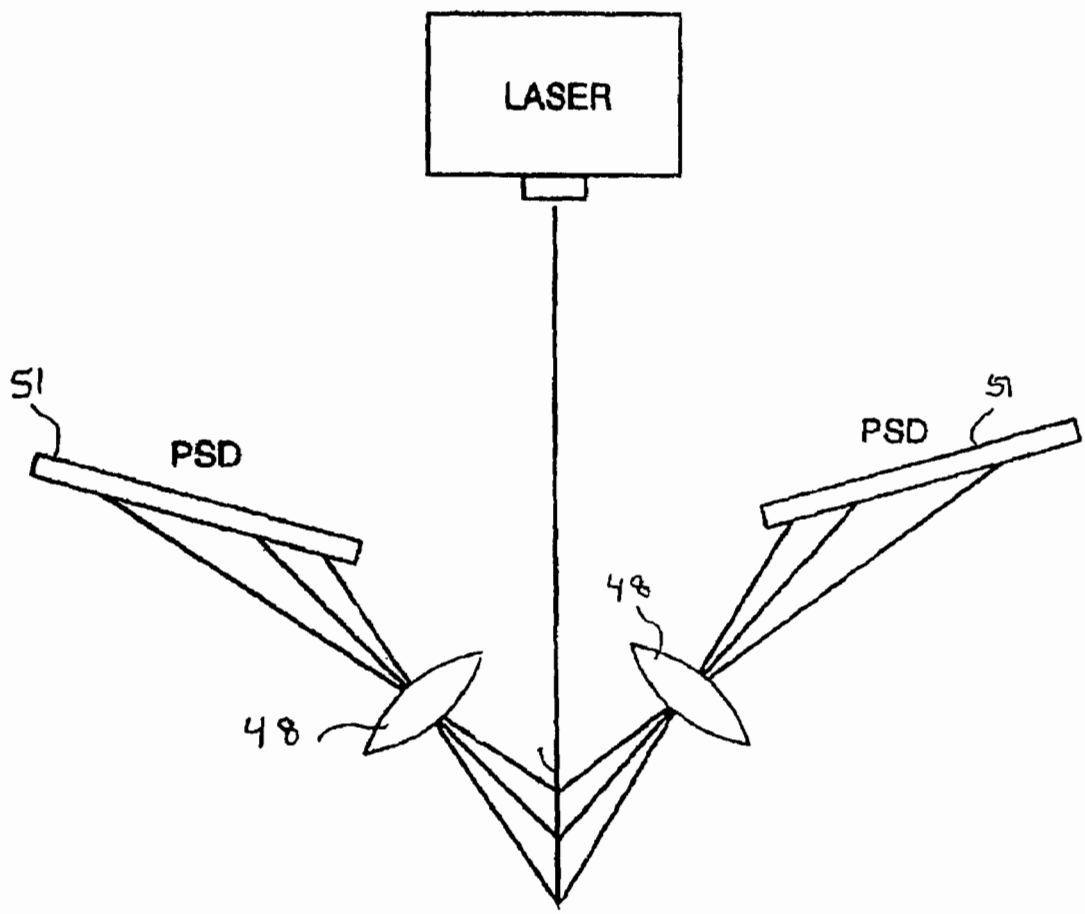

FIG. 9

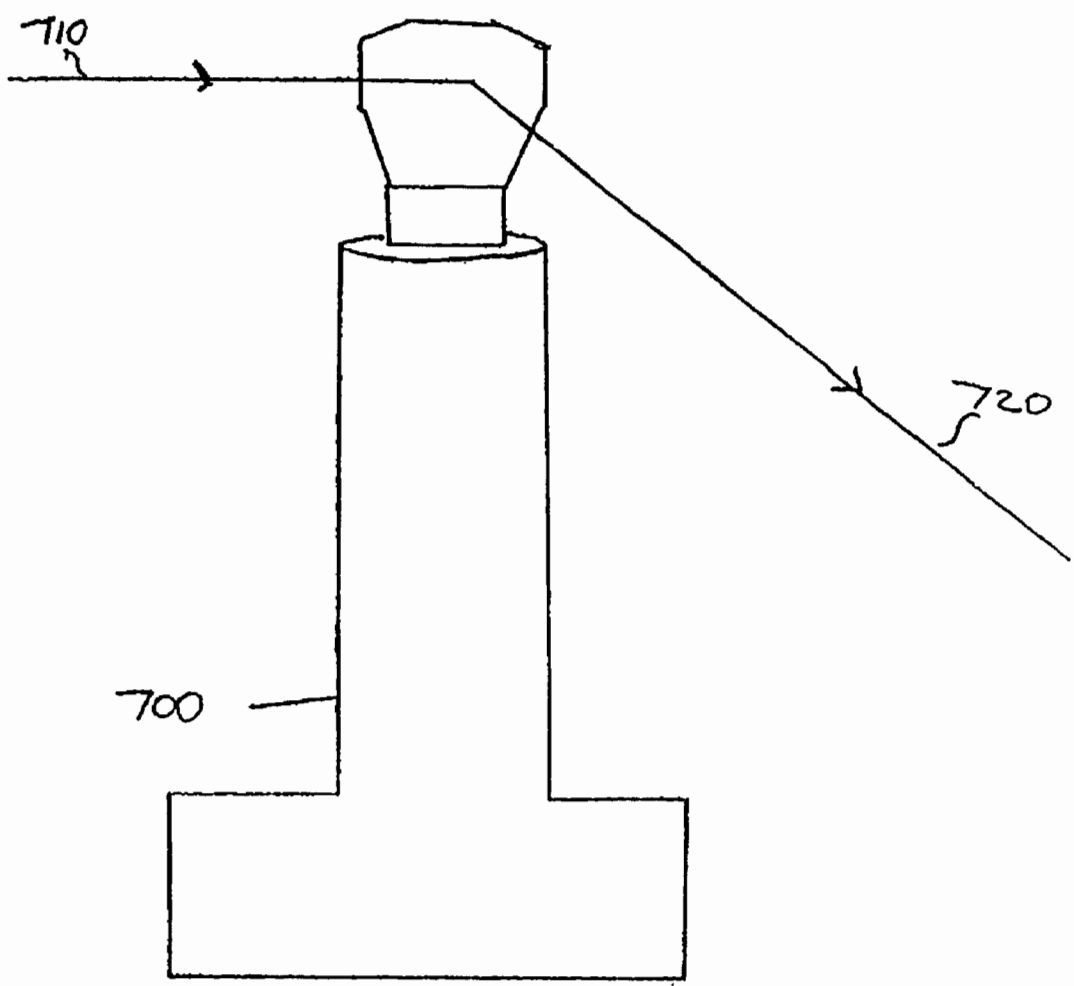

FIG. 10

