Title: FLUIDIZING UNIT AND DISCHARGING SYSTEM

Field of invention

The present invention concerns a fluidizing unit for use in a vessel desanding system, and a vessel desanding system comprising said unit.

Background

Solids production is a common phenomenon in the petroleum industry. Sand and other solid particles are usually produced with oil, gas and water from the reservoir to the surface production facilities. This initiates several operational problems such as erosion of upstream equipment, clogging of flowlines and accumulation in production vessels. Major consequence of these problems could be reduction in performance of separator internals and unplanned shut down of the entire production operation. To avoid such problems, vessel desanding systems are commonly used. In all such systems an accumulation of solids occur. To remove the solids from the desander system, the accumulated solids are fluidized by use of liquid, usually water, and discharged from the system. There are a number of different methods for fluidizing/discharging solids. Known methods are:

The classic jetting system. The disadvantages of this system are the excessive water consumption, large disturbances in process separators, low efficiency of sand removal and risk of clogging.

EP 0802135 A1 discloses a fluidizing unit for fluidizing a non-specified medium. A disadvantage of the disclosed unit is the limited range of operation and thus the quite low efficiency for sand removal.

The aim of the present invention is to provide a fluidizing unit for incorporation in vessel desanding systems, which avoids or alleviates at least some of the disadvantages of the prior art techniques.

Summary of the invention

Embodiments of present invention provide a fluidizing unit for efficient removal of accumulated solids/sand in a separator (desander), in particular vessel desanding systems. The unit requires a low consumption of liquid – just what is needed for fluidization, it can be operated in both online, as well batch-wise mode, and can be retrofitted into existing separator vessels as well as configured for new built vessels. The invention is further defined in the attached claims, and in the following:

In a first aspect, the invention concerns a fluidizing unit for use in a desanding system, comprising a discharge pipe and a supply duct, the discharge pipe comprises a discharge inlet and a discharge outlet, and the supply duct is formed by a housing arranged around the discharge pipe defining an annular space between an outer surface of said pipe and an inner surface of the housing, the supply duct comprises a pressurized liquid inlet and a pressurized liquid outlet, wherein the pressurized liquid outlet comprises one end of the annular space, said end having an elliptic cross-section in a plane being perpendicular to a centerline of the discharge pipe, such that the pressurized liquid outlet, during use, is able to provide a pressurized liquid flow having a elliptic cross-section.

In some embodiments of a fluidizing unit according to the invention, the elliptic cross-section of the pressurized liquid flow is in a plane being substantially perpendicular to a centerline of the discharge pipe.

In some embodiments of the fluidizing unit according to the invention, the housing is substantially shaped as a truncated cone, having the pressurized liquid inlet arranged close to the larger base plane, and the pressurized liquid outlet arranged at the smaller base plane.

In some embodiments of the fluidizing unit according to the invention, the cross-section of the housing and the discharge pipe, in a plane being substantially perpendicular to a centerline of the discharge pipe, is circular at the pressurized liquid inlet.

In some embodiments of the fluidizing unit according to the invention, the cross-section of the housing and the discharge pipe, in a plane being substantially perpendicular to a centerline of the discharge pipe, is elliptic at the pressurized liquid outlet.

In some embodiments of the fluidizing unit according to the invention, the pressurized liquid outlet comprises an annular flange arranged close to the discharge inlet, such that pressurized liquid exiting the outlet during use is led in a direction being substantially perpendicular to the centerline of the discharge pipe.

In some embodiments of the fluidizing unit according to the invention, the discharge inlet has an elliptic cross-section, the major axis of said cross-section aligned with the major axis of the elliptic cross-section of the pressurized fluid outlet, or the elliptic cross-section of the pressurized liquid flow.

In some embodiments of the fluidizing unit according to the invention, the pressurized liquid inlet is arranged such that pressurized liquid will enter off-center to the centerline of the discharge pipe during use, causing said liquid to swirl around said pipe.

A second aspect of present invention provides a desanding system comprising a vessel and at least one fluidizing unit as defined in the first aspect, wherein said unit is arranged within the vessel having the pressurized fluid outlet close to the bottom of the vessel, and such that the major axis of the elliptic cross-section of the pressurized liquid flow is aligned with the longitudinal axis of the bottom of the vessel.

Short description of the drawings

An embodiment of the invention is depicted in the attached drawings.

Fig. 1 is a perspective view of a fluidizing unit according to the invention.
Fig. 2 is a top view of the fluidizing unit in fig. 1.
Fig. 3 is a cross-sectional view of the fluidizing unit in fig. 2
Fig. 4 is a cross-sectional view of the fluidizing unit in fig. 2
Fig. 5 is a cross-sectional view of the fluidizing unit in fig. 2
Fig. 6 is a cross-sectional view of the fluidizing unit in fig. 2
Fig. 7 is a cross-sectional view of the fluidizing unit in fig. 2
Fig. 8 is a cross-sectional view of the fluidizing unit in fig. 2
Fig. 9 shows multiple fluidizing units arranged in a Single Vessel Desanding System (SVDS).

Detailed description of the invention

An embodiment of a fluidizing unit according to the invention is shown in fig. 1. The unit is intended to be incorporated into a vessel desanding system for removing accumulated solids/sand. The unit may be operated in an online desanding mode or in a batch sand removal operation during routine maintenance. The unit comprises a discharge pipe 2 for removal of the fluidized solids. The slurry comprising fluidized solids is sucked into the discharge inlet 4 and removed through the discharge outlet 5. The solids are fluidized by the use of pressurized liquid, usually water. The liquid is introduced into the supply duct 3 through the inlet 8. The supply duct 3 comprises a housing 6 arranged around the discharge pipe 2. The inner surface of the housing and an outer surface of the discharge pipe provide an annular space 7 between them. The cross-section of the annular space, in a plane substantially perpendicular to the centerline of the discharge pipe, is circular at the pressurized liquid inlet 8 and

elliptic at the pressurized fluid outlet, see figs. 6 and 7. The inlet 8 is arranged distal to the outlet 9 of the supply duct, and oriented off-center, see fig. 5, to said duct, such that the liquid is caused to swirl around the central discharge pipe. The pressurized liquid exits the outlet 9 as a liquid flow having an elliptic cross-section in a plane being substantially perpendicular to the centerline of the discharge pipe. In this embodiment the liquid flow is directed substantially perpendicular to the centerline of the discharge pipe by a flange 10. The flange is arranged close to the discharge inlet 4. The cross-section of the discharge inlet 4, in a plane substantially perpendicular to the centerline of the discharge pipe, is also elliptic to provide an optimal discharge profile. The elliptic shape of the exiting liquid flow provides a wider fluidization zone compared to the one obtained with a circular cross-section at the outlet.

The fluidizing unit of the present invention is for incorporation into a vessel desander system 11, see fig. 9. The desander system comprises a vertical or horizontal vessel, wherein solids/sand will accumulate at the bottom due to gravity. In the present system several fluidizing units are arranged inside the vessel. The outlets of the units are further arranged close to the bottom of the vessel, such that the major axis of the exiting pressurized elliptic fluid flow, and/or the major axis of the elliptic cross-section of the pressurized liquid outlet, is aligned with the longitudinal axis of the bottom. This arrangement ensures an optimal fluidization of accumulated solids/sand using a minimum amount of water, as well as minimizing any disturbances in the separator.

Claims

1. A fluidizing unit for use in a vessel desanding system, comprising a discharge pipe and a supply duct, the discharge pipe comprises a discharge inlet and a discharge outlet, and the supply duct is formed by a housing arranged around the discharge pipe defining an annular space between an outer surface of said pipe and an inner surface of the housing, the supply duct comprises a pressurized liquid inlet and a pressurized liquid outlet, wherein the pressurized liquid outlet comprises one end of the annular space, said end having an elliptic cross-section in a plane being perpendicular to a centerline of the discharge pipe, such that the pressurized liquid outlet, during use, is able to provide a pressurized liquid flow having a elliptic cross-section.

2. A fluidizing unit according to claim 1, wherein the elliptic cross-section of the pressurized liquid flow is in a plane being substantially perpendicular to a centerline of the discharge pipe.

3. A fluidizing unit according to claim 1 or 2, wherein the housing is substantially shaped as a truncated cone, having the pressurized liquid inlet arranged close to the larger base plane, and the pressurized liquid outlet arranged at the smaller base plane.

4. A fluidizing unit according to any of the preceding claims, wherein the cross-section of the housing and the discharge pipe, in a plane being substantially perpendicular to a centerline of the discharge pipe, is circular at the pressurized liquid inlet.

5. A fluidizing unit according to any of the preceding claims, wherein the cross-section of the housing and the discharge pipe, in a plane being substantially perpendicular to a centerline of the discharge pipe, is elliptic at the pressurized liquid outlet.

6. A fluidizing unit according to any of the preceding claims, wherein the pressurized liquid outlet comprises an annular flange arranged close to the discharge inlet, such that pressurized liquid exiting the outlet during use is led in a direction being substantially perpendicular to the centerline of the discharge pipe.

7. A fluidizing unit according to any of the preceding claims, wherein the discharge inlet has an elliptic cross-section, the major axis of said cross-section aligned with the major axis of the elliptic cross-section of the pressurized fluid outlet, or the elliptic cross-section of the pressurized liquid flow.

8. A fluidizing unit according to any of the preceding claims, wherein the pressurized liquid inlet is arranged such that pressurized liquid will enter off-center to the centerline of the discharge pipe during use, causing said liquid to swirl around said pipe.

9. A vessel desanding system comprising a vessel and at least one fluidizing unit according to any of the preceding claims, wherein said unit is arranged within the vessel having the pressurized fluid outlet close to the bottom of the vessel, and such that the major axis of the elliptic cross-section of the pressurized liquid flow is aligned with a longitudinal axis of said bottom.

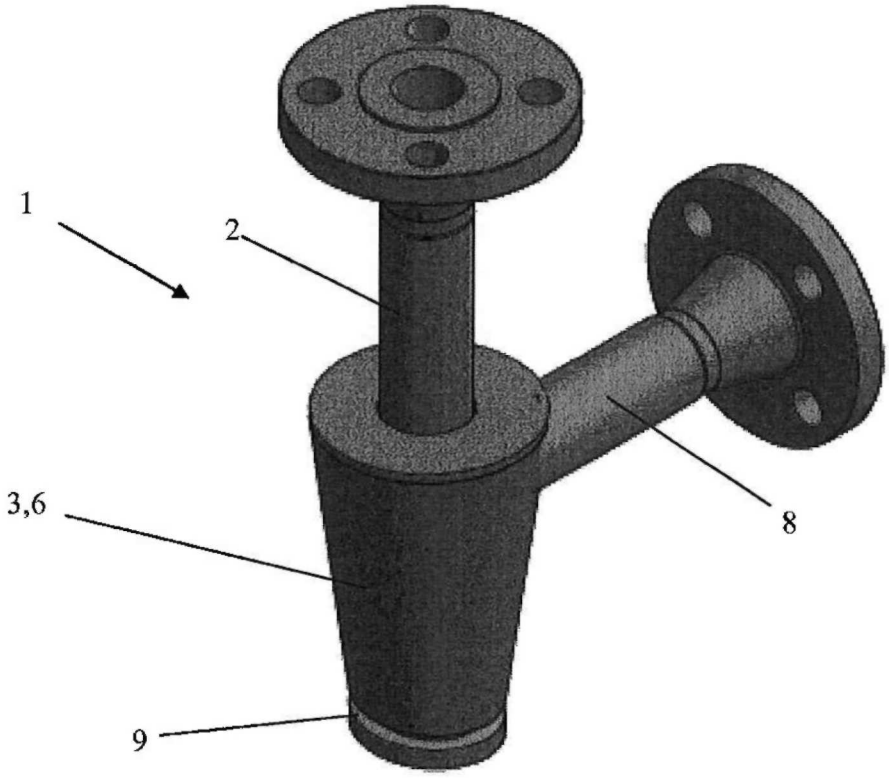

Fig. 1

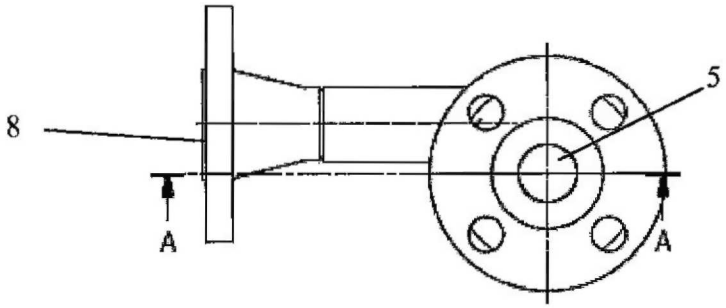

Fig. 2

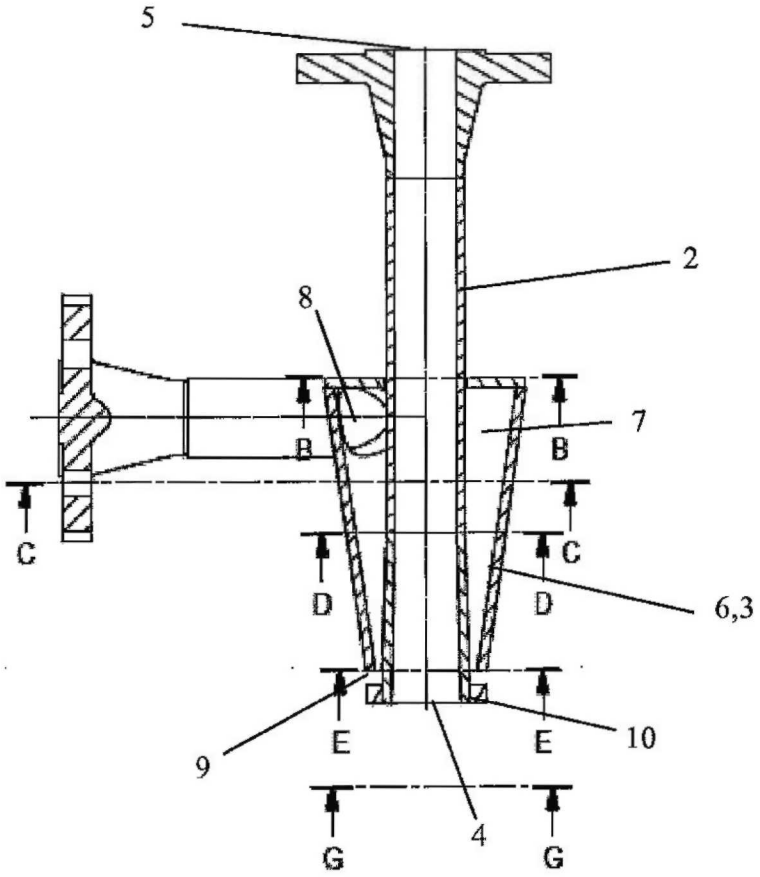

Fig. 3
Section A-A

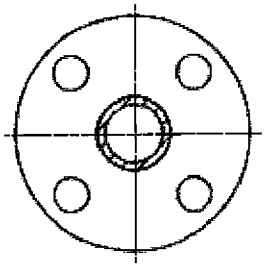

Fig. 4
Section B-B

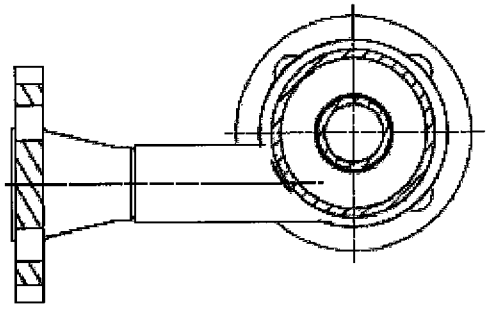

Fig. 5
Section C-C

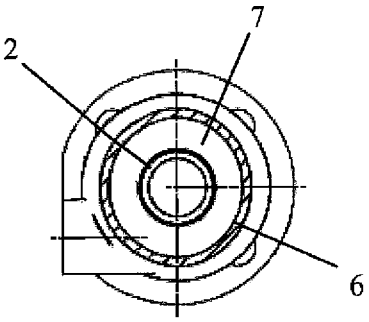

Fig. 6
Section D-D

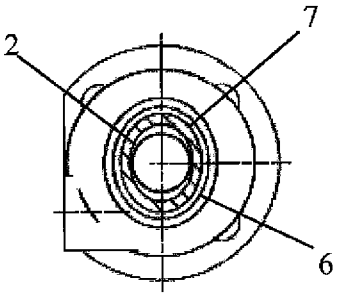

Fig. 7
Section E-E

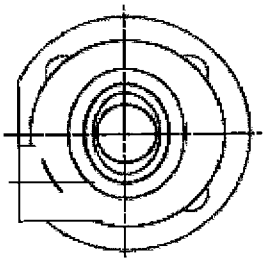

Fig. 8
Section G-G

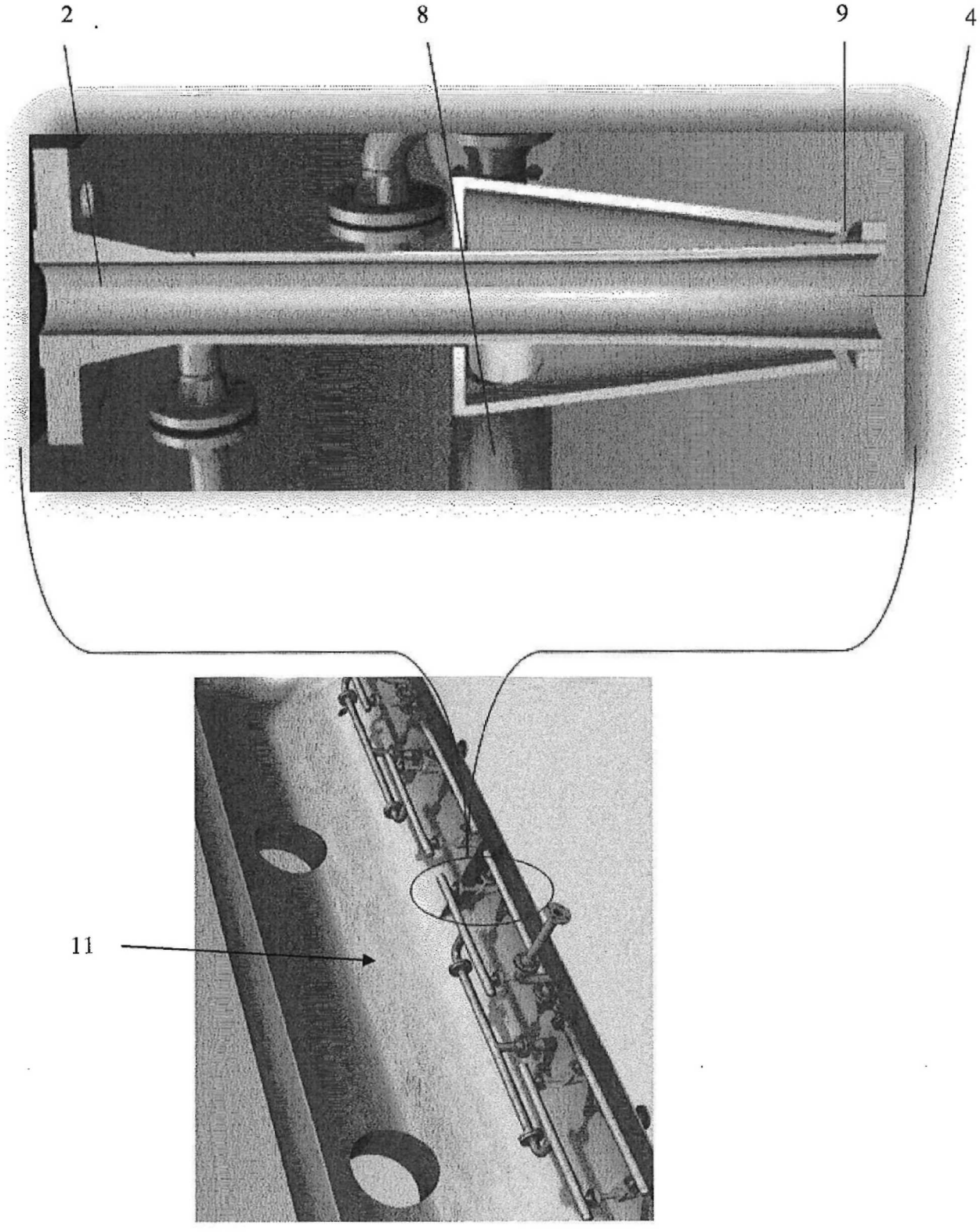

Fig. 9