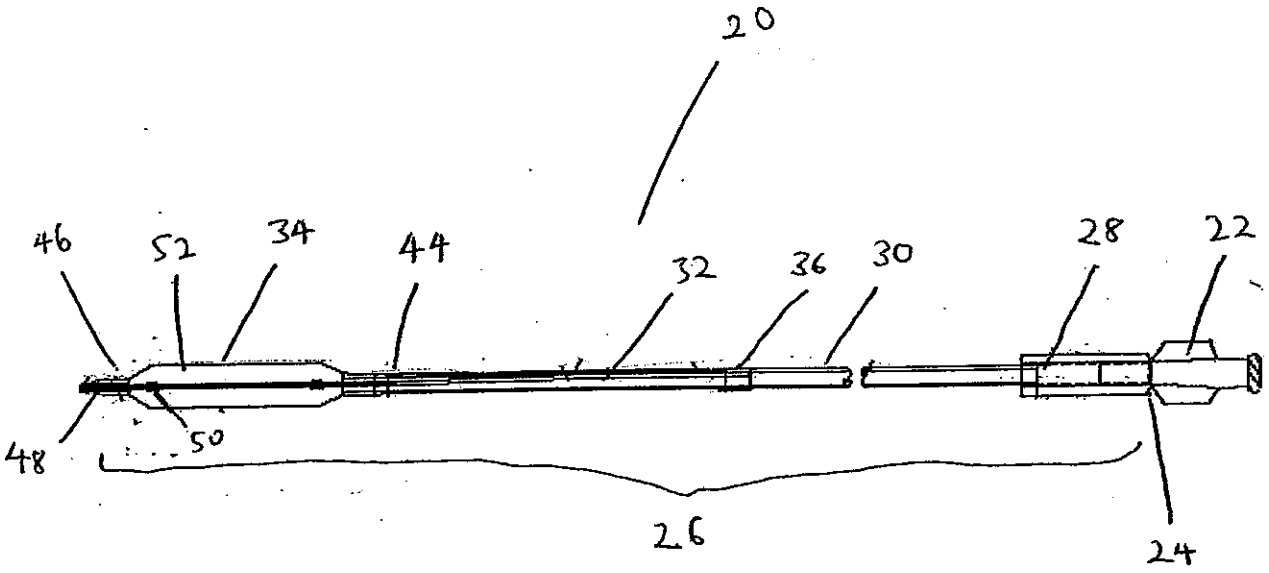

Figure 1

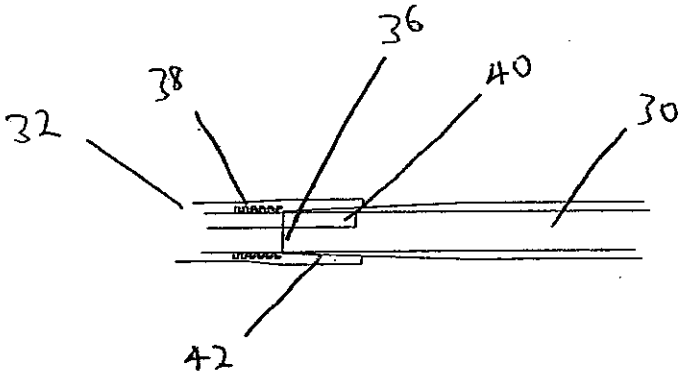

Figure 2

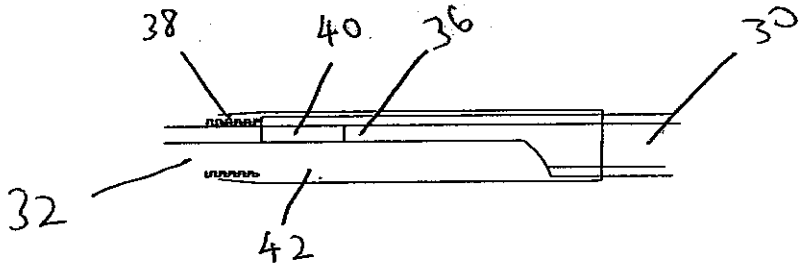

Figure 3

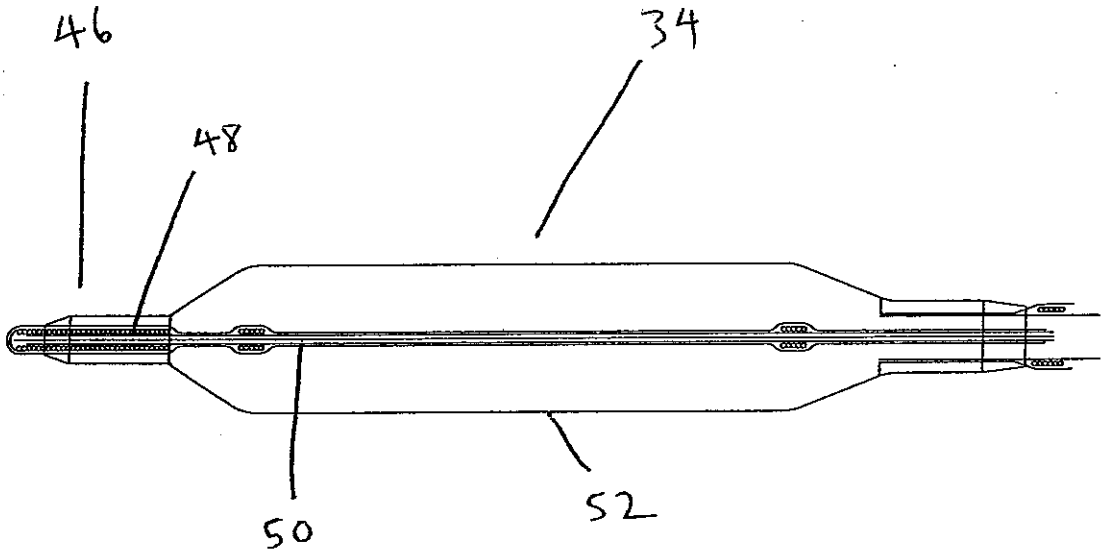

Figure 4

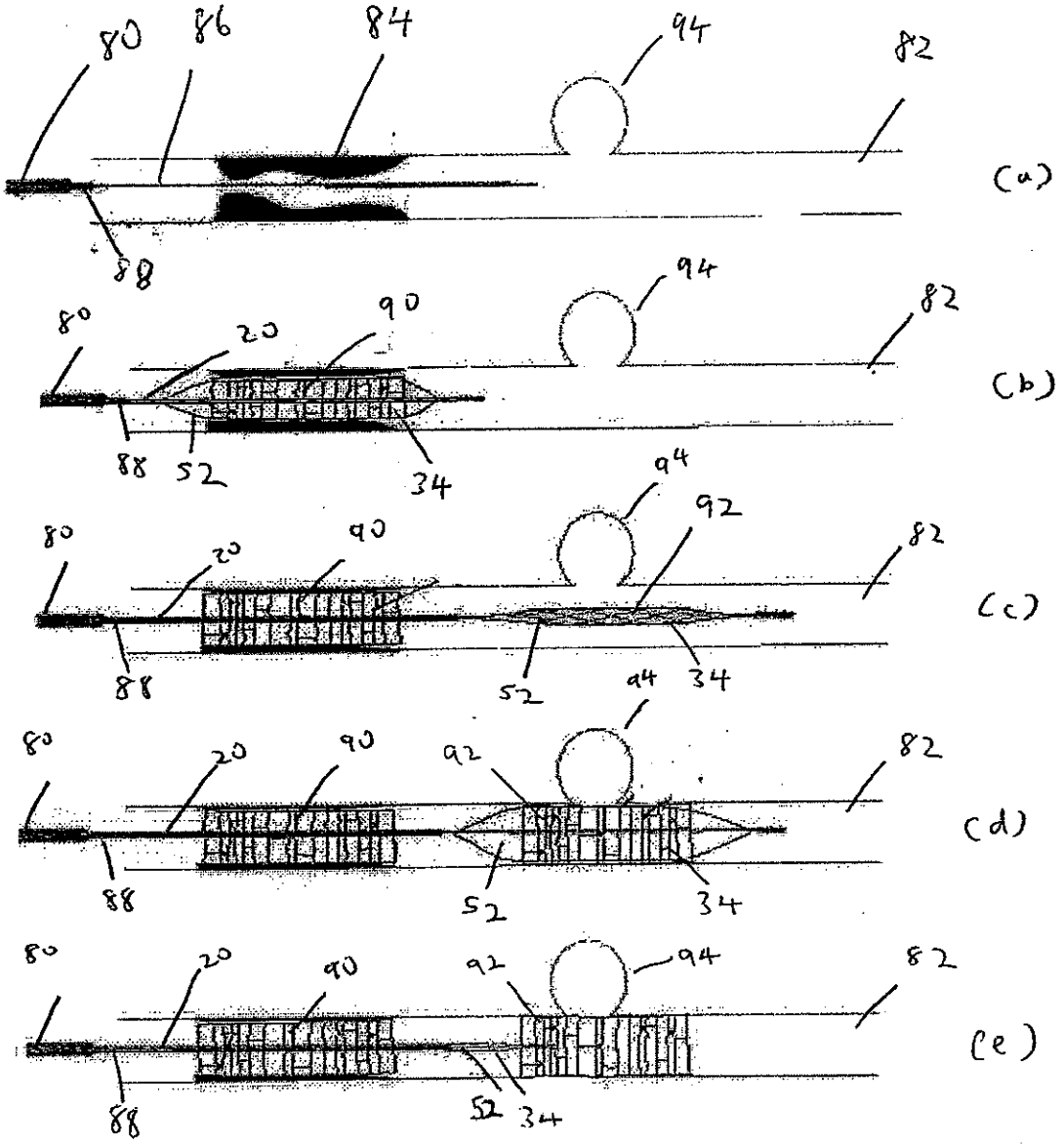
80
86
84
94
82
(a)
88
94
80
20
90
82
(b)
88
52
34
94
92
80
20
90
82
(c)
88
52
94
34
80
20
90
92
82
(d)
88
52
34
80
20
90
92
94
82
(e)
88
52
34

Figure 5

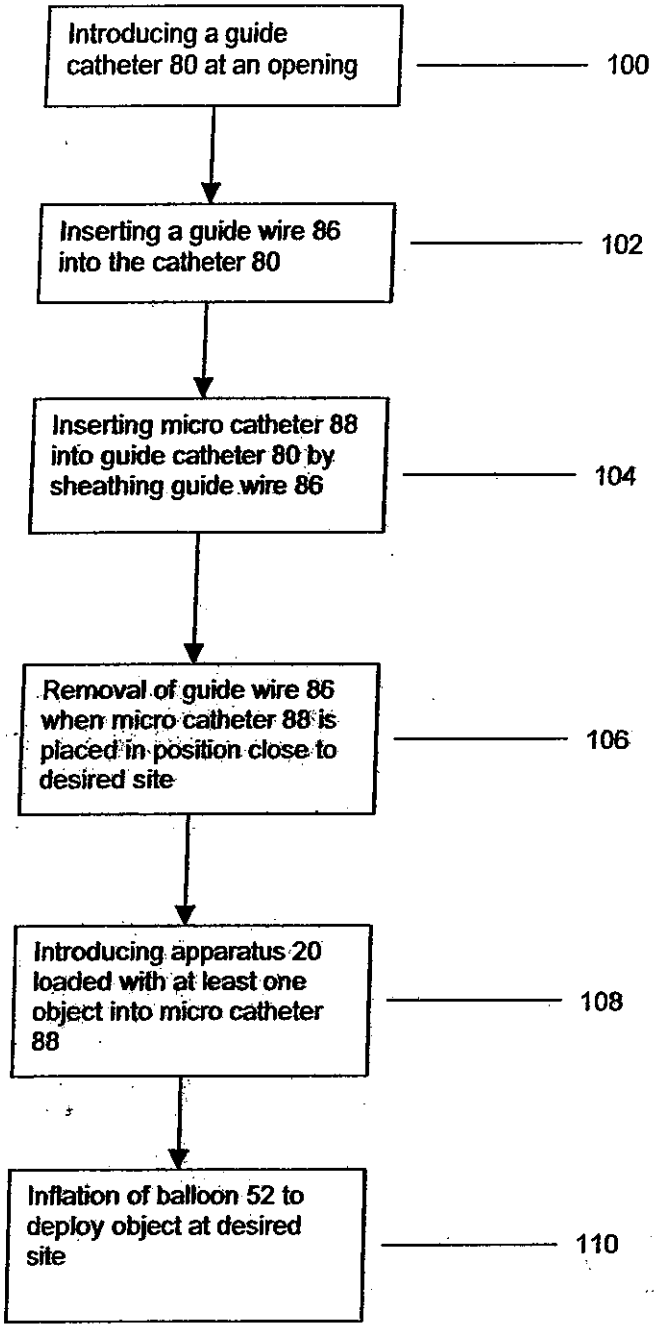
Introducing a guide catheter 80 at an opening
100
Inserting a guide wire 86 into the catheter 80
102
Inserting micro catheter 88 into guide catheter 80 by sheathing guide wire 86
104
Removal of guide wire 86 when micro catheter 88 is placed in position close to desired site
106
Introducing apparatus 20 loaded with at least one object into micro catheter 88
108
Inflation of balloon 52 to deploy object at desired site
110

Figure 6

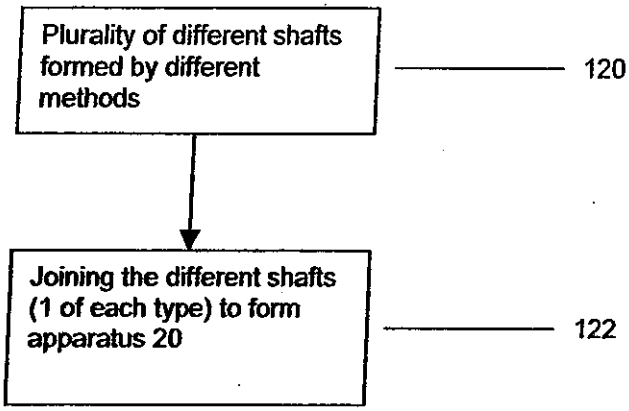
Plurality of different shafts formed by different methods
120
Joining the different shafts (1 of each type) to form apparatus 20
122

Figure 7

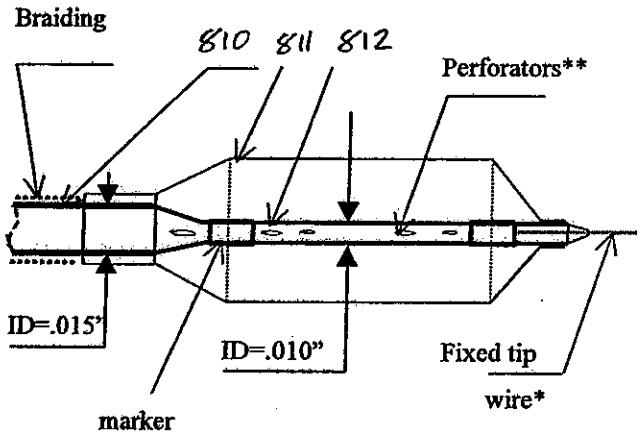
Braiding
810 811 812
Perforators**
ID=.015"
ID=.010"
Fixed tip
wire*
marker

Figure 8