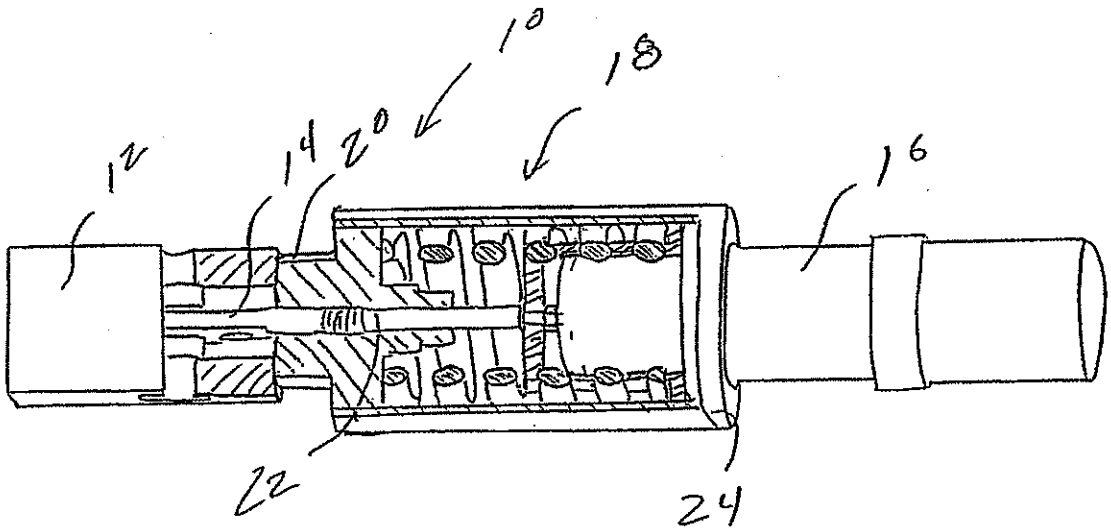

Fig 1

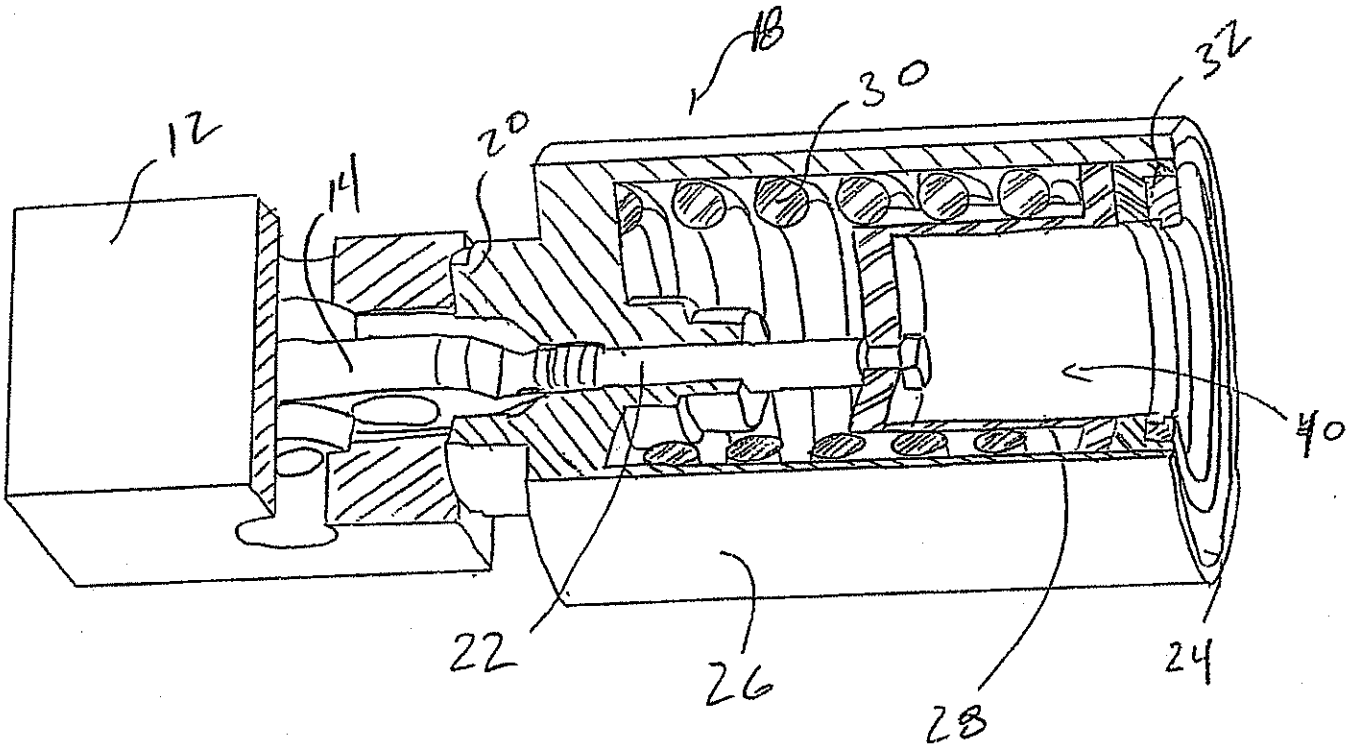

Fig 2

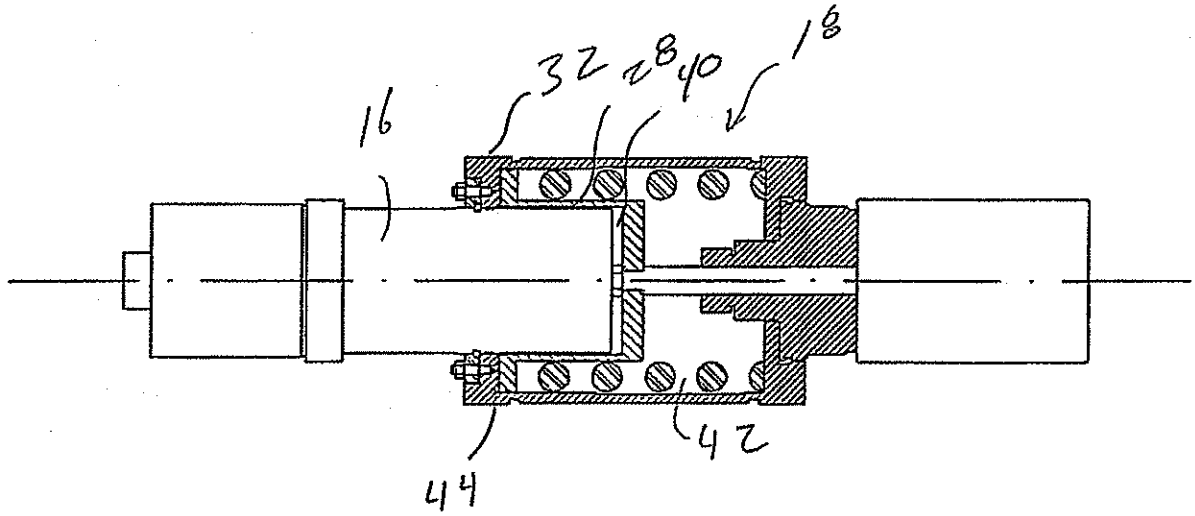

Fig 3

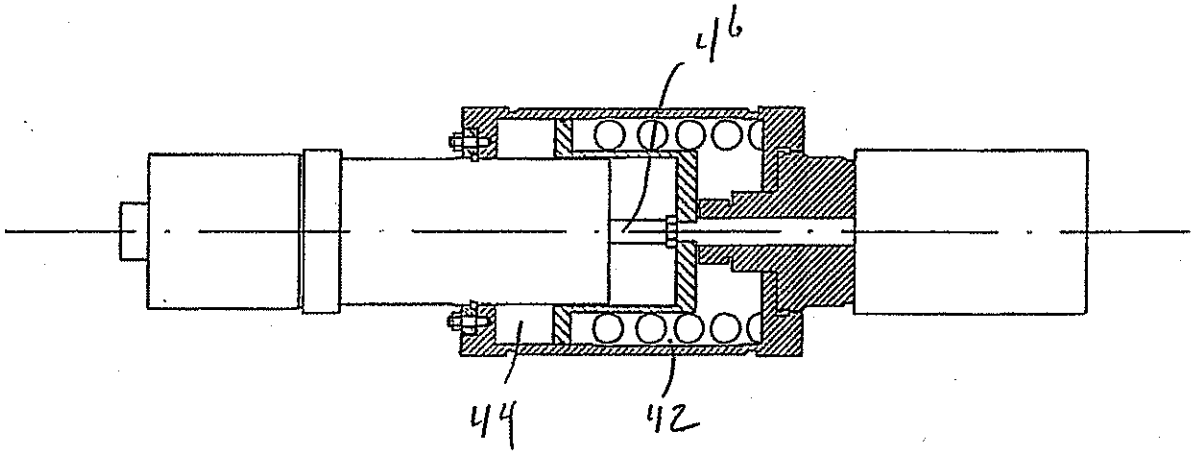

Fig 4

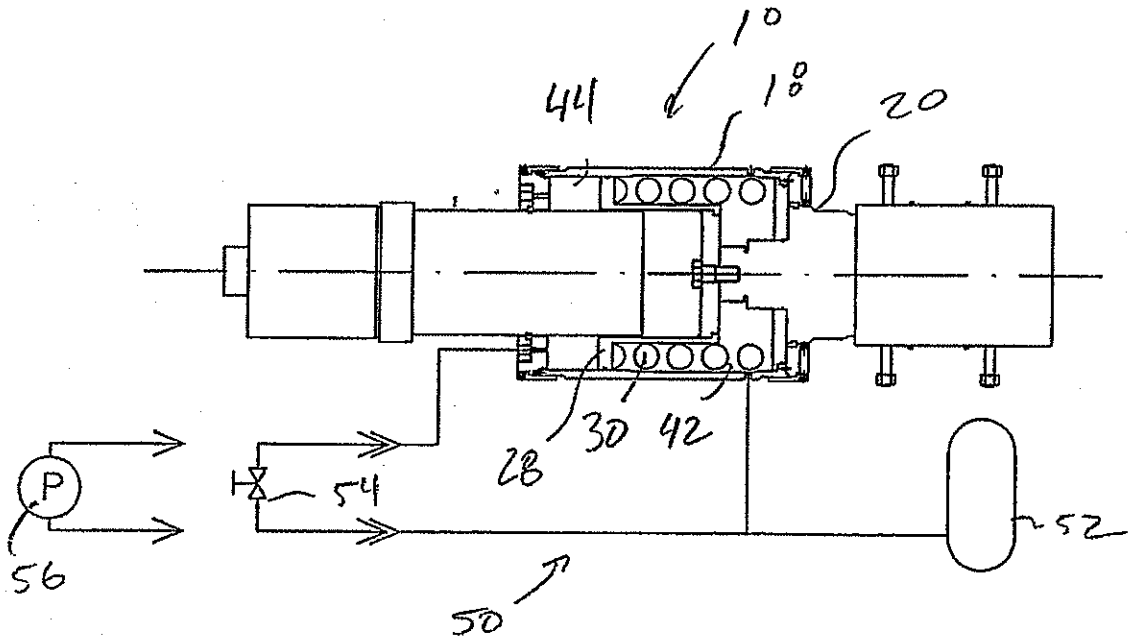

Fig 5

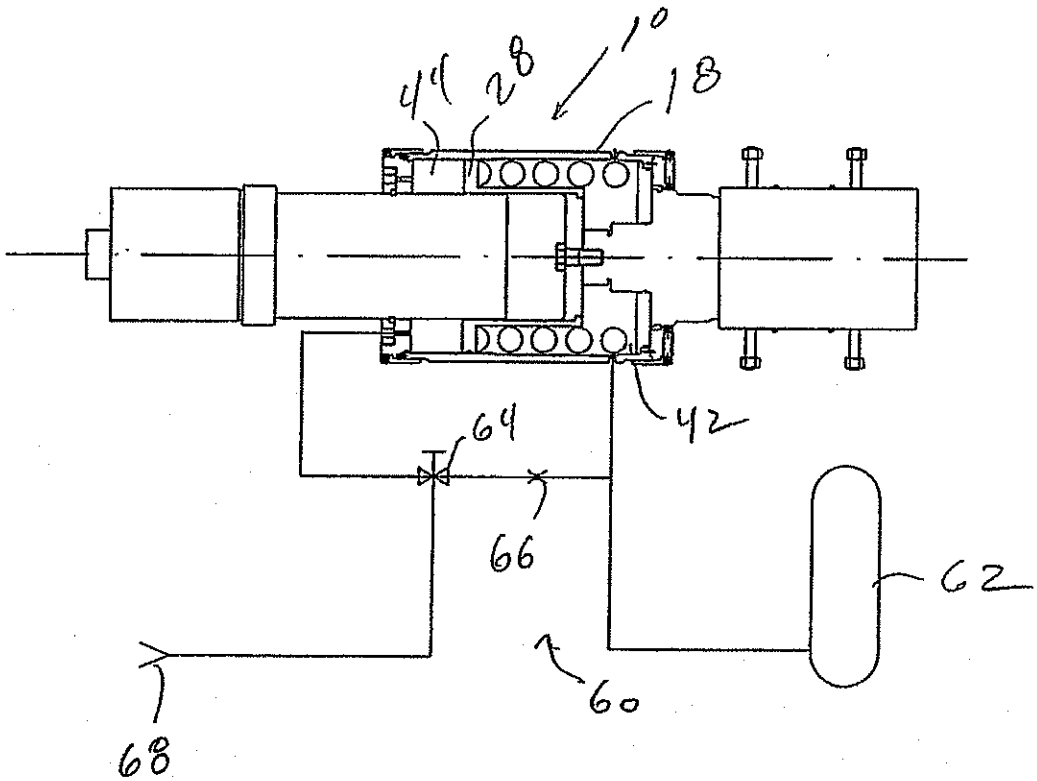

Fig 6