Food Receptacle

Technical Field

[0001] The present invention relates to a food receptacle

Background

[0002] A food box may be used to contain food items. Often, the food box may be used to pack food for takeaways, e.g. from a food outlet or for distribution. When a food is packed and consumed from the box, the consumer may occasionally not finish the food and may wish to heat the food together with the food box before consumption later, e.g. in a microwave oven. As such, the food box may be designed with an effective mechanism to secure and release the lid of the food box to allow it to be opened and closed repeatedly.

[0003] Often, when the consumer opens and closes the food box more than once, the securing mechanism of the food box may be easily damaged, especially take away food boxes that are made from low costs materials such as paper, plastic, e.g. expendable polystyrene (EPS), etc. Hence, such a food box is not designed to allow the food box to be re-used/re-closed repeatedly and effectively.

[0004] In addition, when the food boxes are being used for mass distribution of food, sometimes to various locations, it is not unusual for the food boxes to be stacked onto each other. As such, the food boxes at the bottom are often damaged and cracked thereby causing the food therein to be crushed and fluid therein to leak. Worse, the food may become inconsumable due to contamination etc.

[0005] It is thus an object of the present invention to improve or resolve the aforementioned problems, i.e. to design a food receptacle with an effective locking mechanism to secure and release the lid of the food receptacle easily without much wear and tear.

Summary

[0006] According to various embodiments, the present invention provides a food receptacle including a tray adapted to hold food, a lid adapted to cover the tray, a locking mechanism adapted to lock the lid onto the tray, the locking mechanism having an engaging portion formed on the lid, a protrusion extending from the tray, the protrusion switchable between a locking configuration to engage the engaging portion on the lid and an unlocking configuration to disengage the protrusion from the engaging portion of the tray, and an actuating element connected to the protrusion, such that the actuating element is adapted to be actuated by the lid to actuate the protrusion into the locking position when the lid covers the tray.

[0007] According to various embodiments, the actuating element may be pivotally connected to the tray.

[0008] According to various embodiments, the tray may include a base having a perimeter, a tray perimeter wall surrounding the base along the perimeter of the base, such that the actuating element extends from a tray wall portion of the tray perimeter wall inwards the tray.

[0009] According to various embodiments, the protrusion may extend from a tray wall portion of the tray perimeter wall.

[0010] According to various embodiments, the actuating element and the protrusion may be adapted to rotate relative to the tray wall portion.

[0011] According to various embodiments, the actuating element and the protrusion may be rotatable about a top edge of the tray wall portion, the top edge being opposite a bottom edge of the tray wall portion such that the tray wall portion may be connected to the base along the bottom edge.

[0012] According to various embodiments, the tray wall portion may form an obtuse angle with the base.

[0013] According to various embodiments, the tray perimeter wall may further include a first side wall portion having a first top edge and a second side wall portion opposite the first side wall portion, the second side wall portion having a second top edge, such that the tray wall portion may be disposed between and connected to the first side wall portion and the second side wall portion, such that the first top edge, the second top edge and the other wall's top edge extend along a plane.

[0014] According to various embodiments, the lid may include a lid top having a perimeter such that the lid top may be adapted to cover the tray, a lid peripheral wall surrounding the lid top along the perimeter having a lid wall portion, such that the engaging portion may be formed on the lid wall portion.

[0015] According to various embodiments, the top edge of the tray wall portion may be adapted to contact the lid top of the lid when the lid covers the tray.

[0016] According to various embodiments, the top edge of the tray wall portion may contact a portion of the perimeter of the lid top when the lid covers the tray, such that the portion of the perimeter being between the lid top and the lid wall portion.

[0017] According to various embodiments, the lid wall portion may include a connecting edge connecting the lid wall portion to the lid top, a leading edge opposite the connecting edge, such that the lid wall portion may form an obtuse angle with the lid top.

[0018] According to various embodiments, the lid wall portion overlaps the tray wall portion when the lid covers the tray.

[0019] According to various embodiments, the lid may be pivotally connected to the tray.

[0020] According to various embodiments, the tray perimeter wall may include a rear wall portion opposite the tray wall portion, the rear wall portion connected to and between the first side wall portion and the second side wall portion such that the lid top may be connected to the rear wall portion.

[0021] According to various embodiments, the protrusion may include a tongue.

[0022] According to various embodiments, the engaging portion may include a slot.

[0023] The present invention has the benefit of allowing the lid of the food receptacle to be repeatedly closable onto the tray without easily being damage. Further, the food receptacle allows another food receptacle to be stacked onto it so that the food receptacles may be stacked for distribution without collapsing or crumbing inwards. In addition, the design of the present food receptacle provides ease of closing and locking of the food receptacle. Further, the food receptacle has the advantage of preventing contamination of the food therein during handling or packing of the food as the hands need not come into contact with the internal surface of the food receptacle, i.e. the lid and the tray, during packing of the food and closing of the food receptacle.

Brief description of the drawings

[0024] Fig. 1 shows a perspective view of an exemplary embodiment of the food receptacle in the unlocking configuration.

[0025] Fig. 2 shows a side elevation view of the embodiment in Fig. 1.

[0026] Fig. 3 shows a frontal elevation view of the embodiment in Fig. 1.

[0027] Fig. 4 shows a side elevation view of the embodiment in Fig. 1

[0028] Fig. 5A show a side elevation view of the embodiment in Fig. 1 in the unlocking configuration.

[0029] Fig. 5B shows a side elevation view of the embodiment in Fig. 5A in the locking configuration.

[0030] Fig. 6 shows an exemplary embodiment of the embodiment of the present invention.

[0031] Fig. 7A and 7B shows close-up views of the embodiment in Fig. 5B.

[0032] Fig. 8 shows another close-up view of the embodiments in Fig.7A.

[0033] Fig. 9 shows another exemplary embodiment of the food receptacle.

Detailed Description

[0034] Fig. 1 shows a perspective view of a food receptacle 10 having a tray 100 adapted to hold food, a lid 200 adapted to cover the tray 100, a locking mechanism 300 adapted to lock the lid 200 onto the tray 100. Locking mechanism 300 includes an engaging portion 310 formed on the lid 200 and a protrusion 320 extending from the tray 100. Protrusion 320 is switchable between a locking configuration (not shown in Fig. 1) to engage the engaging portion 310 on the lid 200 and an unlocking configuration (as shown in Fig. 1) to disengage the protrusion 320 from the engaging portion 310 of the tray 100. Food receptacle 10 includes

an actuating element 330 connected to the protrusion 320, such that the actuating element 330 is adapted to be actuated by the lid 200 to actuate the protrusion 320 into the locking position when the lid 200 covers the tray 100.

[0035] Referring to Fig. 1, the food receptacle 10 may include the lid 200 and the tray 100. As shown in Fig. 1, the lid 200 may be pivotally connected to the tray 100. Tray 100 may include the protrusion 320 and the lid 200 may include an engaging portion 310 such that the protrusion 320 may be configured to engage engaging portion 310 when the food receptacle 10 is closed, i.e. when the lid 200 covers the tray 100, which may be when the protrusion 320 is in the locking configuration. Lid 200 may be separated from the tray 100.

[0036] Referring to Fig. 1, the tray 100 may include a base 110 having a perimeter and a tray perimeter wall 120 surrounding the base 110 along the perimeter of the base 110. Tray perimeter wall 120 may extend from the perimeter of the base 110. Tray perimeter wall 120 may extend in a direction away from the base 110. Tray perimeter wall 120 and the base 110 may be adapted to contain food therein. Tray perimeter wall 120 may include a front wall portion 122, a rear wall portion 124 opposite the front wall portion 122, a first side wall portion 126 and a second side wall portion 128 opposite the first side wall portion 126. Both the first side wall portion 126 and the second side wall portion 128 may extend from the front wall portion 122 to the rear wall portion 124. Front wall portion 122 and the rear wall portion 124 may extend in the same direction. First side wall portion 126 and the second side wall portion 128 may extend in the same direction. Referring to Fig. 2, the tray perimeter wall 120 may form an obtuse angle A with the base 110. For example, the front wall portion 122, the rear wall portion 124, the first side wall portion 126 and/or the second side wall portion 128 may form an obtuse angle A with the base 110. Angle A may be 97 degrees, 98 degrees, 99 degrees etc. Although the angle A shown in Fig. 2 may be an obtuse angle, the angle A may

be acute or right-angled. Tray perimeter wall 120 may be substantially perpendicular to the base 110 such that the front wall portion 122 forms a right angle with the base 110. Tray perimeter wall 120 may form an acute angle A with the base 110. Front wall portion 122 may be disposed between and connected to the first side wall portion 126 and the second side wall portion 128. By having a wall portion, e.g. the front wall portion 122, supported by two opposite wall portions, e.g. the first side wall portion 126 and the second side wall portion 128, the tray wall portion may be structurally more rigid to withstand a higher load on the tray wall portion. Two adjacent wall portions, e.g. front wall portion 122 and first side wall portion 126, may be reinforced at a connecting portion (not shown in Fig. 2) connecting the two adjacent wall portions to improve the structural strength between the adjacent wall portions. For example, the lid 200 may include a reinforcing layer attached to the two adjacent wall portions at the connecting portion. As will be shown later, a more rigid and stronger wall portion would be beneficial for supporting a higher load and provides stronger engagement between the protrusion 320 and the engaging portion 310 as shown in Fig. 1.

[0037] Although the embodiment in Fig. 1 shows that all wall portions form an obtuse angle A with the base 110, it is possible that at least one of the front wall portion 122, rear wall portion 124, first side wall portion 126 or second side wall portion 128 may form an obtuse angle A with the base 110, while the remaining wall portions may form a non-obtuse angle A with the base 110. A wall portion may be a panel, e.g. a rectangular panel. Base 110 may be one of a rectangular, square, an octagonal, a trapezium or a triangle. Depending on the shape of the base 110, the number of wall portions formed on the tray 100 would be accordingly.

[0038] Fig. 2 shows a side elevation view of the tray 100. Referring to Fig. 2, the tray perimeter wall 120 may include a rim 121. Rim 121 may be formed by a top edge of each of the tray wall portions, i.e. the front wall portion 122, the rear wall portion 124, the first side

wall portion 126 and the second side wall portion 128. Each of the tray wall portions may include a top edge and a bottom edge opposite the top edge. Top edge of each of the tray wall portions may be parallel to the bottom edge of the respective wall portions. Each of the tray wall portions may be connected to the base 110 along the respective bottom edge. For example, referring to Fig. 1, the front wall portion 122 may include a top edge 122T and a bottom edge 122B where the top edge 122T is opposite the bottom edge 122B. Front wall portion 122 may be connected to the base 110 along the bottom edge 122B. Accordingly, the top edges of each of wall portions will be referenced by the reference number for the relevant wall portion followed by T for top edge or B for bottom edge. Rear wall portion 124 as shown in Fig. 1 may not include a top edge as the exemplary embodiment in Fig. 1 shows the lid 200 being attached to the rear wall portion 124. Top edges 122T,126T,128T of the tray wall portions may be continuous such that the top edges form the rim 121 or may be discontinuous as shown in Fig. 1. While discontinuous, these top edges 122T,126T,128T may extend along a plane and contact the lid 200, e.g. a lid top 210, when the lid 200 covers the tray 100. Although not shown in Fig. 1, the top edges 122T,126T,128T of the front wall portion 122, the first side wall portion 126 and the second side wall portion 128, may not extend along the same plane, i.e. front wall portion 122, the first side wall portion 126 and the second side wall portion 128, may not be of the same height For example, the front wall portion 122 may be taller than the first side wall portion 126 and the second side wall portion 128 such that the distance between the top edge 122T and the bottom edge 122B of the front wall portion 122 is longer than the distance between the top edges 126T,128T and the bottom edges 126B,128B respectively. First side wall portion 126 and the second side wall portion 128 may be of the same height such that the height of the top edges 126T,128T are of the same distance from the base 110. It can be appreciated that by having the front wall portion 122 be at the same height as the two adjacent wall portions, i.e. the first side wall portion 126

and the second side wall portion 128, where the top edges 122T,126T,128T, are along the same plane, the front wall portion 122 may be more rigid and able to withstand higher load than if the front wall portion 122 is taller than the both the first side wall portion 126 and second side wall portion 128, i.e. the front wall portion 122 may fold if a load is applied onto the front wall portion 122. A continuous rim 121 may prevent gaps between the lid top 210 and the tray 100 which may be advantageous in preventing heat lost thus keeping the food in the food receptacle warm or cool and preventing insects from crawling into the food receptacle. It may be possible for the front wall portion 122 to be higher or lower than the rear wall portion 124 such that the first side wall portion 126 and the second side wall portion 128 may be slanted correspondingly with respect to the base 110.

[0039] As shown in Fig. 1, the actuating element 330 may be pivotally connected to the tray 100. Actuating element 330 may extend from the tray wall portion inwards the tray 100. As shown in Fig. 2, the actuating element 330 may extend traversely from the front wall portion 122 towards the rear wall portion 124 and towards the centre of the tray 100. In this way, the actuating element 330 extends inward of the tray 100. Referring to Fig. 1, the actuating element 330 may extend longitudinally along the front wall portion 122 from about the first side wall portion 126 to about the second side wall portion 128. Actuating element 330 may have a distal edge 330D and a proximal edge 330P opposite the distal edge 330D such that the actuating element 330 may be connected to the front wall portion 122 along the proximal edge 330P. As shown in Fig. 1, the proximal edge 330P of the actuating element 330 may coincide with the top edge 122T of the front wall portion 122. Actuating element 330 may have a flat profile, e.g. a panel. Actuating element 330 may be rotated about a longitudinal axis 331 which coincides with the proximal edge 330P and/or the top edge 122T of the front wall portion 122.

[0040] Protrusion 320 may extend from a wall portion of the tray perimeter wall 120. As shown in Fig. 1, the protrusion 320 may extend from the front wall portion 122 of the tray 110. Actuating element 330 may extend from the tray wall portion of the tray perimeter wall 120. Protrusion 320 may include a connecting edge 320C and an engaging edge 320E opposite the connecting edge 320C. Protrusion 320 may be connected to the front wall portion 122 along the connecting edge 320C. Protrusion 320 may extend in a direction which is parallel to the front wall portion 122. Protrusion 320 may be rigidly connected to the actuating element 330. Protrusion 320 may extend parallelly to the actuating element 330. Protrusion 320 may have a width, i.e. the distance between the connecting edge 320C and the engaging edge 320E, which is shorter than the width of the actuating element 330, i.e. the distance between the distal edge 330D and the proximal edge 330P. Actuating element 330 may have a width that is wider than the width of the protrusion 320. Actuating element 330 may be at least twice as wide as the protrusion 320. Actuating element 330 may have a length, i.e. the length of the actuating element 330 in the longitudinal direction, that is longer than the length of the protrusion 320. Actuating element 330 may be at least twice as long as the protrusion 320, whereby the length of the protrusion 320 is its length in the longitudinal direction. Protrusion 320 may be a tongue. Protrusion 320 may include at least one bump, or any protruding element adapted to engage the engaging portion 310. Protrusion 320 may have a flat profile, e.g. a flat plate. As shown in Fig. 1, the connecting edge 320C of the protrusion 320 may coincide with the top edge 122T of the front wall portion 122. Referring to Fig. 1, the connecting edge 320C, the proximal edge 330P and the top edge 122T may coincide along a longitudinal axis 331. The tray wall portion may be any one of the wall portions, e.g. front wall portion 122, rear wall portion 124, first side wall portion 126 and second side wall portions 128.

[0041] Referring to Fig. 2, the actuating element 330 and the protrusion 320 may be adapted to rotate relative to the tray wall portion, e.g. front wall portion 122. Actuating element 330 and the protrusion 320 may be rotatable about the top edge, e.g. 122T, of the tray wall portion, e.g. the front wall portion 122, the top edge being opposite the bottom edge, e.g. 122B, of the tray wall portion such that the tray wall portion is connected to the base 110 along the bottom edge. As shown in Fig. 2, the actuating element 330 may be rotated about the longitudinal axis 331, or the top edge 122T of the front wall portion 122. Protrusion 320 may be adapted to rotate about the longitudinal axis 331. In Fig. 2, the rotated position of the actuating element 330 and the protrusion 320 may be shown by the broken lined version of the actuating element 330. As shown in Fig. 2, the actuating portion 330 may be rotatable about the longitudinal axis 331 in a clockwise direction which may be in an anti-clockwise direction when viewed in the opposite direction of the food receptacle 10. Similarly, the protrusion 320 may be rotatable about the longitudinal axis 331 in a clockwise direction when the actuating portion 330 is rotated in the same direction. As shown, the actuating element 330 and the protrusion 320 may be rotatable in the same direction.

[0042] Fig. 3 shows a front view of the food receptacle 10. As shown, the tray perimeter wall 120 may form an angle A with the base 110. Angle A may be an obtuse angle as shown in Fig. 3. Tray perimeter wall 120 may form an acute angle or may be substantially perpendicular to the base 110.

[0043] Referring to Fig. 1, the lid 200 may include the lid top 210 having a perimeter. Lid top 210 may be adapted to cover the tray 100, e.g. the lid top 210 may be a portion of the lid 200 which extends across an area formed by the rim 121 of the tray, i.e. the lid top 210 at least covers the tray completely. Lid 200 may include a lid peripheral wall 220 surrounding the lid top 210 along the perimeter of the lid top 210. Lid peripheral wall 220 may have a lid wall

portion, e.g. front lid wall portion 222, such that the engaging portion 310 may be formed on the lid wall portion. Lid peripheral wall 220 may extend from the perimeter of the lid top 210. Lid peripheral wall 220 may extend in a direction away from the lid top 210.

[0044] As shown in Fig. 1, the lid peripheral wall 220 may include a front lid wall portion 222, a first side lid wall portion 226 and a second side lid wall portion 228 extending from the front lid wall portion 222 across the lid top 210. Lid wall portion may be at least one of the front lid wall portion 222, first side lid wall portion 226 or second side lid wall portion 228 of the lid peripheral wall 220. First side lid wall portion 226 may be parallel to the second side lid wall portion 228. Front lid wall portion 222 may extend from the first side lid wall portion 226 to second side lid wall portion 228. Referring to Fig. 2, the lid peripheral wall 220 may form an angle B with the lid top 210. Angle B may be an obtuse angle. For example, the front lid wall portion 222, the first side lid wall portion 226 (not shown in Fig. 2) and/or the second side lid wall portion 228 may form an obtuse angle B with the lid top 210. Angle B may be acute or right-angled. Lid peripheral wall 220 may be substantially perpendicular to the lid top 210 such that the front lid wall portion 222 forms a right angle with the lid top 210. Lid wall 220 may form an acute angle B with the lid top 210. Front lid wall portion 222 may be disposed between and connected to the first side lid wall portion 226 and the second side lid wall portion 228. While the embodiment shows that all the lid wall portions form an obtuse angle B with the lid top 210, it is possible that at least one of the front lid wall portion 222, first side lid wall portion 226 or second side lid wall portion 228 may form an acute, or right-angled angle B with the lid top 210. Lid wall portion may have a flat profile, e.g. a flat plate.

[0045] Fig. 4 shows a side elevation view of the food receptacle 10 with the lid 200 in an "about to close" configuration. Referring to Fig. 4, the lid wall portion, e.g. the front lid wall

portion 222, may include a connecting edge, e.g. 222C connecting the lid wall portion to the lid top 210, a leading edge 222L opposite the connecting edge 222C, such that the lid wall portion may form an obtuse angle B with the lid top 210. Leading edge 222L may be disposed adjacent the tray wall portion, e.g. the front wall portion 122, of the tray 100 when the lid 200 covers the tray 100, i.e. the lid wall portion may overlap the tray wall portion when the lid 200 covers the tray 100. As shown in Fig. 4, the front lid wall portion 222 may include the connecting edge 222C connecting the front lid wall portion 222 to the lid top 210 and a leading edge 222L opposite the connecting edge 222C. As shown in Fig. 4, the leading edge 222L of the front lid wall portion 222 may exceed the top edge 122T of the front wall portion 122 from the rear wall portion 124 or top edge 124T of the rear wall portion 124 when seen from the side elevation view of the food receptacle 10. As shown in Fig. 4, the angle B between the front lid wall portion 222 and the lid top 210 may be an obtuse angle. In this way, the front lid wall portion 222 would not collide with the front wall portion 122 of the tray 100 when the lid 200 is brought towards the tray 100 to cover tray 100. When the lid 200 covers the tray 100, the front lid wall portion 222 may be adjacent the front wall portion 122 of the tray 100. As such, the leading edge 222L may be adjacent the front wall portion 122 of the tray 100. Further, as shown, the leading edge 222L may be disposed between the top edge 122T and bottom edge 122B of the front wall portion 122, i.e. a wall portion of the tray perimeter wall 120.

[0046] Referring to Fig. 3, the engaging portion 310 may be formed on the front lid wall portion 222 of the lid 200. Engaging portion 310 may extend in a direction from the first side lid wall portion 226 (not shown in Fig. 4) to the second side lid wall portion 228. Engaging portion 310 may extend along the connecting edge 222C. Engaging portion 310 may be configured to engage the protrusion 320 so as to maintain the lid 200 in the locking

configuration. Engaging portion 310 may have a shape which corresponds to the protrusion 320. Engaging portion 310 may include a slot such that the protrusion 320 may extend into the slot when the protrusion 320 is in the locking configuration. Engaging portion 310 may include a groove, a detent, or any engaging element adapted to engage the protrusion 320. Engaging portion may be a key-hole adapted to receive the protrusion 320.

[0047] Fig. 5A shows a sectional view of the food receptacle 10 across line X-X in Fig. 3. As shown in Fig. 5A, the food receptacle 10 is in the unlocking configuration where the lid 200 is not covering the tray 100, i.e. the protrusion 320 is not engaging the engaging portion 310. Lid 200 has been shown in broken line to distinguish the lid 200 from the tray 100 and to show the position of the engaging portion 310 and the actuating element 330 in the respective locking and unlocking configurations. Fig. 5B shows the sectional view of the food receptacle 10 in Fig. 5A in the locking configuration where the lid 200 covers the tray 100 and where the protrusion 320 is in the locking configuration. Referring to Fig. 5B, in the locking configuration, the top edge of the tray wall portion, e.g. the front wall portion 122, may be adapted to contact the lid top 210 of the lid 200 when the lid covers the tray 100. In the locking configuration, the protrusion 320 may be substantially parallel to the base 110 of the tray 100 and the actuating element 330 may be in contact with the lid top 210 and may be substantially parallel with the lid top 210 and/or the base 110 as the lid top 210 forces the actuating element 330 into the locking configuration. Lid top 210 may contact the rim 121 of the tray perimeter wall 120 completely when the lid 200 covers the tray 100. As shown in Fig. 5B, the front wall portion 122, the rear wall portion 124, the first side wall portion 126 (not shown in Fig. 5B) and the second side portion 128 may contact the lid top 210, so as to support the lid 200 when the lid 200 covers the tray 100. As it may be appreciated, the lid 200 may have minimum slack and is able as much as possible retain its original position and

maintain a taut configuration. Particularly, the top edge 122T of the front wall portion 122, the top edge 124T of the rear wall portion 124, the top edge 126T (not shown in Fig. 5B) of the first side wall portion 126 (not shown in Fig. 5B) and the top edge 128T of the second side wall portion 128 may contact the lid top 210. When the lid top 210 rests on and supported by the tray wall portions 122,124,126,128, the food receptacle 10 would be able to support a load, e.g. another food receptacle when stacked on it, without collapsing easily.

[0048] Referring to Fig. 5A, in the unlocking configuration, the lid top 210 may not contact the actuating element 330. Particularly, the lid top 210 may not contact the distal edge 330D of the actuating element 330. As such, the engaging portion 310 may not be actuated to engage the protrusion 320. As the lid 200 is adapted to cover the tray 100, the lid top 210 approaches and eventually contacts the distal edge 330D of the actuating element 330. As the lid 200 is further lowered to cover the tray 100, the lid top 210 forces the actuating element 330 to rotate (clockwise direction based on Fig. 5A). Consequently, the protrusion 320 may be actuated to rotated correspondingly (clockwise direction based on Fig. 5A). Eventually, when the lid 200 covers the tray 100, i.e. when the lid top 210 contacts at least the front wall portion 122, the actuating element 330 may actuate the protrusion 320 to engage the engaging portion 310. Referring to Fig. 5B, the actuating element 330 may be rotated to a direction which corresponds with the direction of the lid top 210 and the protrusion 320 may be rotated into the locking position and protrudes through the engaging portion 310 where the engaging portion 310 engages the protrusion 320. When the food receptacle is closed, the gap between the lid 200 and the rim 121 of the tray 200 may be minimal such that the protrusion 320 may remain engaged to the engaging portion 310. As the actuating element 330 is being retained in the same position, the protrusion 320 may be retained in the locking position until the lid 200 is lifted from the tray 100 thereby enabling

the protrusion 320 to disengage from the engaging portion 310. To open the food receptacle, the front wall portion 122 may be pressed inwards so as to disengage the protrusion 320 from the engaging portion 310, When the lid 200 is lifted from the tray 100, foreseeably, the engaging portion 310 may actuate the protrusion 320 to dislodge from the engaging portion 310, e.g. the protrusion 320 to further rotate in the clockwise direction (based on Fig. 5B) and slides out of the engaging portion 310. Accordingly, the actuating element 330 may be actuated to rotate in the same direction, i.e. clockwise direction.

[0049] It can be seen in Fig. 5B that the top edge of the tray wall portion may be lodged or abutted against the corresponding connecting edge of the lid wall portion. For example, the top edge 122T of the front wall portion 122 may be lodged against the connecting edge 222C of the front lid wall portion 222. Similarly, the top edges 126T,128T of the first side wall portion 126 and the second side wall portion 128T may be lodged against the connecting edges 226C,228C respectively. In this way, the respective tray wall portions may be held in place and prevented from rotating outwardly, especially when under a load L.

[0050] As shown in the embodiments in Fig. 1-4, the lid 200 may be pivotally connected to the tray 100. Tray perimeter wall 120 may include a rear wall portion, e.g. the rear wall portion 124, opposite the tray wall portion, e.g. the front wall portion 122, where the rear wall portion 124 may be connected to and between the first side wall portion 126 and the second side wall portion 128 such that the lid top 210 is connected to the rear wall portion 124.

[0051] Referring to Fig. 5B, in the embodiment where the food receptacle 10 is in the locked configuration, the tray 100 may be attached to the rear wall portion 124 of the lid 200 on a rear side of the food receptacle 10. On the front side of the food receptacle 10, which is opposite to the rear side, the front wall portion 122 may be engaged with the connecting edge

222C where the lid top 210 and the front lid wall portion 222 meet such that the front wall portion 122 may be prevented from rotating outwardly, i.e. where angle A becomes larger.

[0052] Fig. 6 shows an exemplary embodiment of the food receptacle 20. Similar features in the exemplary embodiment of Fig. 6 and any one of Fig. 1-4 would have the same reference numerals. As shown in Fig. 6, the lid 200 may be separated from the tray 100. Tray 100 may include at least two locking mechanisms 300. Referring to Fig. 6, the tray 100 may have a first protrusion 320F and a first actuating element 330F pivotally connected to the front wall portion 122 and a second protrusion 320S and a second actuating element 330S pivotally connected to the rear wall portion 124. It is necessary that the first protrusion 320F and the second protrusion 320S are disposed opposite to each other as shown in Fig. 6 so as to lock the lid 200 to the tray 100 properly and securely. Also, the opposing configuration provides an opposing force in the outwardly direction to keep the lid 200 engaged to the tray 100. Similarly, the protrusions and actuating elements may be present in the first side wall portion 126 (not shown in Fig. 6) and the second side wall portion 128 and the first side lid wall portion 226 (not shown in Fig. 6) and the second side lid wall portion 228 may include corresponding engaging portions to engage the respective protrusions.

[0053] Fig. 7A and 7B show a force diagram of the front side and rear side of the food receptacle 10 respectively. Referring to Fig. 7A, when a load, e.g. at least one food receptacle, is placed on the food receptacle 10, the food receptacle 10 would experience a force L onto the lid 200 of the food receptacle 10. As the lid 200 covers and contacts the tray 100, at least one of the tray wall portions, e.g. the front wall portion 122, may be subject to a downward vertical force FV, e.g. along the top edge 122T of the front wall portion 122. As the front wall portion 122 is inclined at an obtuse angle A from the base 110, the front wall portion 122 may be rotated outwardly (from the centre of the tray). However, as the top edge

122T of the front wall portion 122 engages the front lid wall portion 222 along the connecting edge 222C, the front lid wall portion 222 exerts a horizontal inward force FH onto the front wall portion 122 thus restraining the front wall portion 122 from rotating under the load L. Further, as the front wall portion 122 is supported by the first wall portion 126 (not shown in Fig. 7A) and the second side wall portion 128, the first wall portion 122 would be structurally stronger to support the load L than if it is not supported or half-supported.

[0054] Similarly, as shown in Fig. 7B, the rear wall portion 124 may be subject to a vertical force FV due to the load L onto the food receptacle 10. As the rear wall portion 124 is connected to the lid top 210 of the lid 200, the rear wall portion 124 may be restrained from rotating outwardly by horizontal force FH by the lid top 210. Referring to Fig. 6, the rear wall portion 124 may be restrained by the lid peripheral wall 220, similar to the front wall portion 122 mentioned earlier.

[0055] The same understanding can be applied to the first side wall portion 126 and the second side wall portion 128 correspondingly where they are restrained by the corresponding lid wall portions 226,228. For an embodiment where the lid top 210 is in contact with the four wall portions 122,124,126,128, the first side wall portion 126 and the second side wall portion 128 may be restrained from rotating outwardly by the first side lid wall portion 226 (not shown in Fig. 7A or 7B) and the second side lid wall portion 228 respectively. As mentioned above, it is preferably that the lid top 210 is supported by at least one of the opposing wall portions of the tray 100, e.g. front wall portion 122 and rear wall portion 124, and/or first side wall portion 126 and second side wall portion 128.

[0056] Lid top 210 may contact at least a portion of the tray perimeter wall 120, e.g. the tray wall portion, when the lid 200 covers and contacts the tray 100. Although not shown in the

figures, the lid top 210 may be in contact with only the front wall portion 122 and the rear wall portion 124.

[0057] As shown in the embodiments, the tray wall portions 122,124,126,128 when inclined at an obtuse angle A with the base 110 of the tray 100 provide structural rigidity in preventing the relevant wall portions from buckling under the load. Further, the opposing outwardly inclining wall portions, e.g. first side wall portion 126 and second side wall portion 128, and the respective lid wall portions, e.g. first side lid wall portion 226 and second side lid wall portion 228, improves the structural strength of the lid top 210 and helps to prevent the lid top 210 from sinking into the tray 100 when a load is applied onto lid 200 of the food receptacle 10.

[0058] Fig. 8 shows an enlarged view of the locking mechanism 300. As shown in Fig. 8, when the food receptacle receives a load L onto its lid 200, the tray wall portion, e.g. the front wall portion 122, is forced to rotate outwardly towards the lid wall portion, e.g. front lid wall portion 222. As such, it can be appreciated that as the load L gets heavier, the force exerted by the front wall portion 122 onto the front lid wall portion 222 may increase. Thus, it can be appreciated that the protrusion 320 may better secure into the engaging portion 310 and prevents the protrusion 320 from being dislodged from the engaging portion 310. Hence, the locking mechanism 300 better secures the lid 200 to the tray 100 and prevents the food receptacle 10 from being opened under a reasonable amount of loading, e.g. when food receptacles are being stacked onto each other. In fact, the food receptacle 10 as designed allows food receptacles to be stacked onto each other without the lid 200 from collapsing into the tray 100 and without the tray wall portions or lid wall portions from buckling under the load L thereby crushing the content therein.

[0059] Fig. 9 shows another exemplary embodiment of the food receptacle 30. Referring to Fig. 1, the lid top 210 may be of a planar profile. Lid top 210 may be a non-planar profile, e.g. a stepped profile, waved profile, saw-tooth profile. Referring to Fig. 8, the lid top 210 may include at least one platform 212 and at least one step 214. Lid top 210 may include a multiple stepped profile. As shown in Fig. 9, while the lid top 210 may not be a flat profile, e.g. a stepped top, a perimeter lid top 216 which surrounds the non-flat profile may be in contact with the tip of the tray perimeter wall 120 of the tray 100. Perimeter lid top 216 may be in a plane. As such, it can be appreciated that lid top 210 may include any profile as long as the perimeter lid top 216 of the lid 200 may be supported by the tray perimeter wall 120 or a portion thereof, e.g. at least the front wall portion 122, rear wall portion 124 and the first side wall portion 126 (not shown in Fig. 9) and the second side wall portion 128.

[0060] For any of the above embodiments, each wall portion may include at least one locking mechanism 300. For example, the front wall portion 122 may include two or more protrusions 320 and the front lid wall portion 222 may correspondingly include two or more engaging portions 310. The same may be applicable to the first side wall portion 126 and the first side lid wall portion 226, the second side wall portion 128 and the second side lid wall portion 228, etc.

Claims

1. A food receptacle comprising:

a tray adapted to contain food, wherein the tray comprises a base having a perimeter, a tray perimeter wall surrounding the base along the perimeter of the base, wherein the tray perimeter wall comprises a first side wall portion having a first top edge, a second side wall portion opposite the first side wall portion, the second side wall portion having a second top edge, a front wall portion disposed between and connected to the first side wall portion and the second side wall portion, wherein the front wall portion comprises a top edge, and a rear wall portion opposite the front wall portion, the rear wall portion connected to and between the first side wall portion and the second side wall portion, wherein the rear wall portion comprises a top edge; wherein the tray perimeter wall comprises a rim formed by the first top edge, the second top edge, the top edge of the front wall portion and the top edge of the rear wall portion, wherein the rim extends along a plane; wherein the front wall portion and the rear wall portion are each connected to the first side wall portion and the second side wall portion from the base to the rim;

a lid comprising a lid top having a perimeter wherein the lid top is adapted to cover the tray, a lid peripheral wall surrounding the lid top along the perimeter of the lid top, wherein the lid top is adapted to contact the rim completely when the lid top covers the tray;

a locking mechanism adapted to lock the lid onto the tray, the locking mechanism comprising,

an engaging portion formed on the lid peripheral wall,

a protrusion extending from the front wall portion of the tray perimeter wall, the protrusion switchable between a locking configuration to engage the engaging portion on the lid and an unlocking configuration to disengage the protrusion from the engaging portion of the lid,

and an actuating element connected to the protrusion, wherein the actuating element extends from the front wall portion of the tray perimeter wall inwards the tray, wherein the actuating element is adapted to be actuated by the lid to actuate the protrusion into the locking configuration when the lid covers the tray.

2. The food receptacle of claim 1, wherein the front wall portion, the first side wall portion and the second side wall portion have the same height from the base wherein the first top edge, the second top edge and the top edge are of the same distance from the base.

3. The food receptacle of claim1 or 2, wherein the lid peripheral wall comprises a first side lid wall portion; a second side lid wall portion opposite the first side lid wall portion; a front lid wall portion between and connected to the first side lid wall portion and the second side lid wall portion; wherein the front lid wall portion, the first side lid wall portion, and the second side lid wall portion, each comprises a connecting edge connecting each of them to the lid top, wherein the top edge of the front wall portion, the first top edge of the first side wall portion and the second top edge of the second side wall portion are abutted against the connecting edge of the front lid wall portion, the connecting edge of the first side lid wall portion and the connecting edge of the second side lid wall portion respectively when the lid covers the tray.

4. The food receptacle of claim 3, wherein the front lid wall portion overlaps the front wall portion when the lid covers the tray.

5. The food receptacle of claim 3 or 4, wherein at least one of the front lid wall portion, first side lid wall portion, second side lid wall portion, forms an acute angle with the lid top.

6. The food receptacle of any one of claims 1 to 5, wherein at least one of the front wall portion, rear wall portion, first side wall portion or second side wall portion forms an obtuse angle with the base.

7. The food receptacle of any one of claims 1 to 6, wherein the lid is pivotally connected to the tray.

8. The food receptacle of any one of claims 1 to 7, wherein the lid top is connected to the top edge of the rear wall portion.

9. The food receptacle of any one of claims 1 to 8, wherein the protrusion and actuating element are pivotally connected to the front wall portion of the tray perimeter wall and adapted to rotate relative thereto, the protrusion extends parallelly to the actuating element, wherein in the locking configuration, the actuating element is in contact with the lid top and the protrusion and actuating element are parallel to the base of the tray.

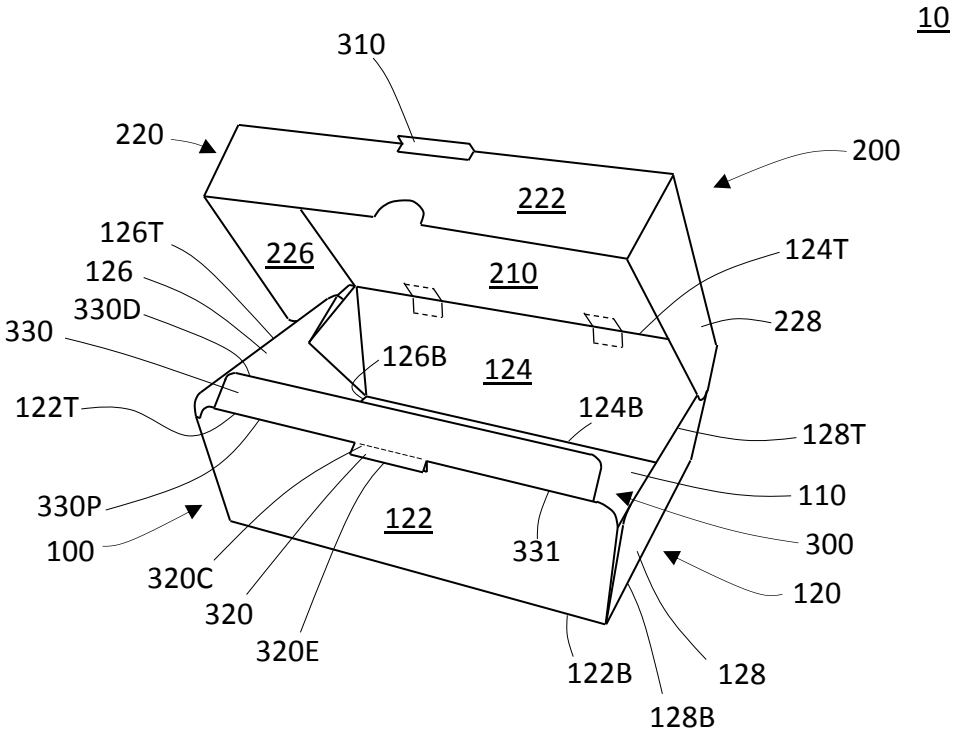
10
310
220
200
222
126T
226
124T
126
210
330D
228
330
126B
124
122T
124B
128T
330P
110
122
300
100
331
320C
120
320
320E
122B
128
128B

Fig. 1

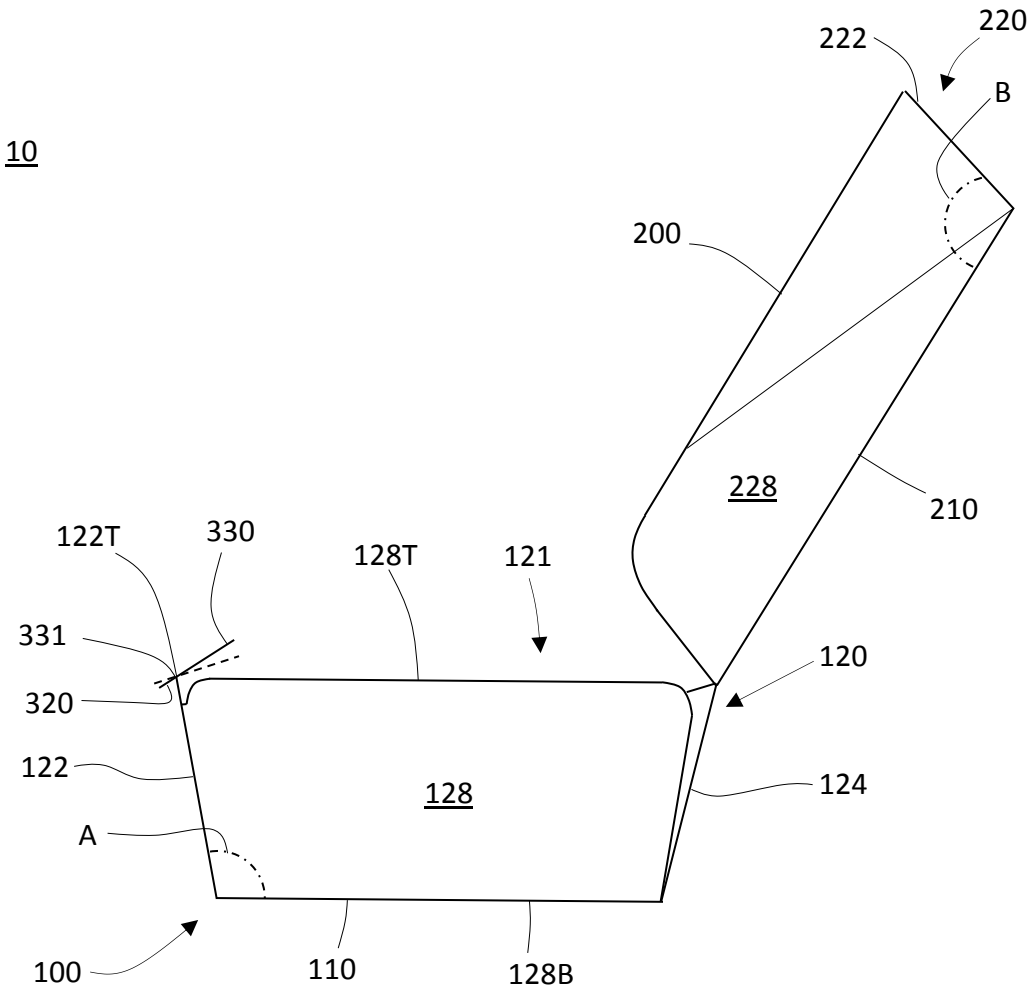
10
222
220
B
200
228
210
122T
330
128T
121
331
120
320
122
128
124
A
100
110
128B

Fig. 2

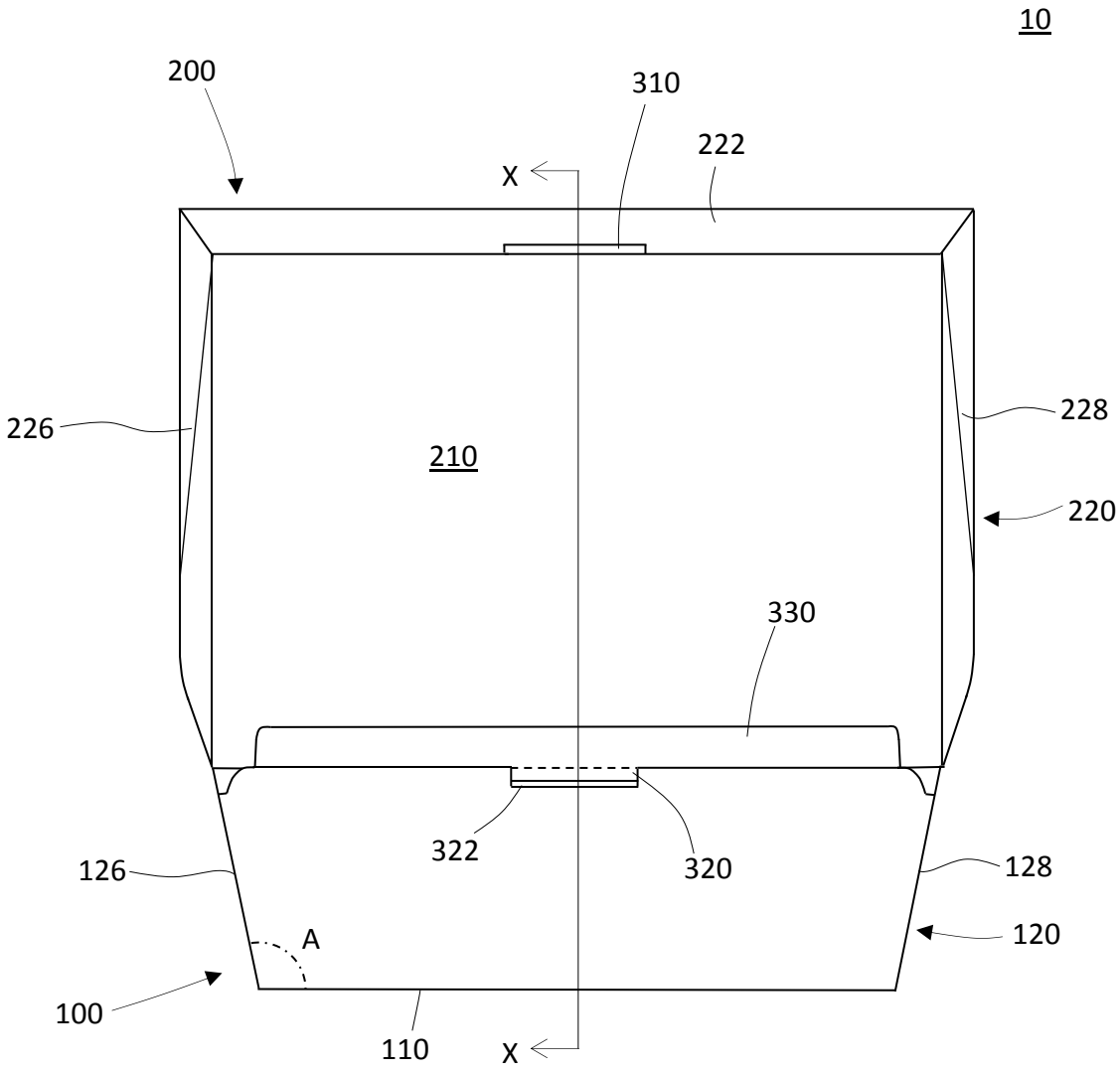
10
200
310
222
X
226
228
210
220
330
322
320
126
128
A
120
100
110
X

Fig. 3

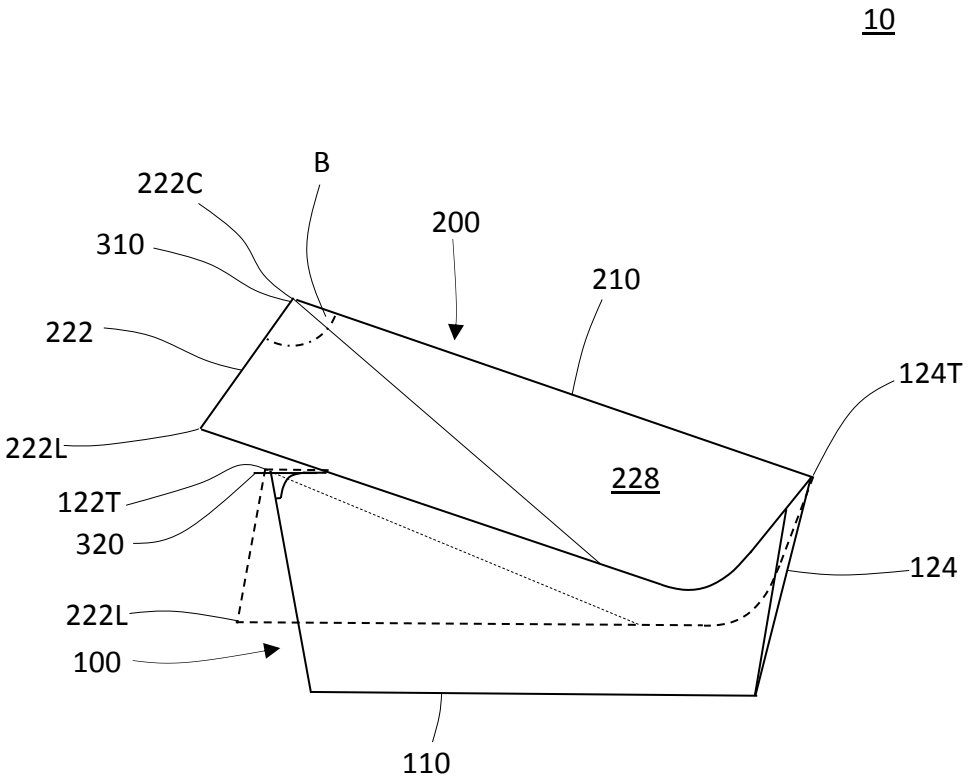
10
B
222C
200
310
210
222
124T
222L
228
122T
320
124
222L
100
110

Fig. 4

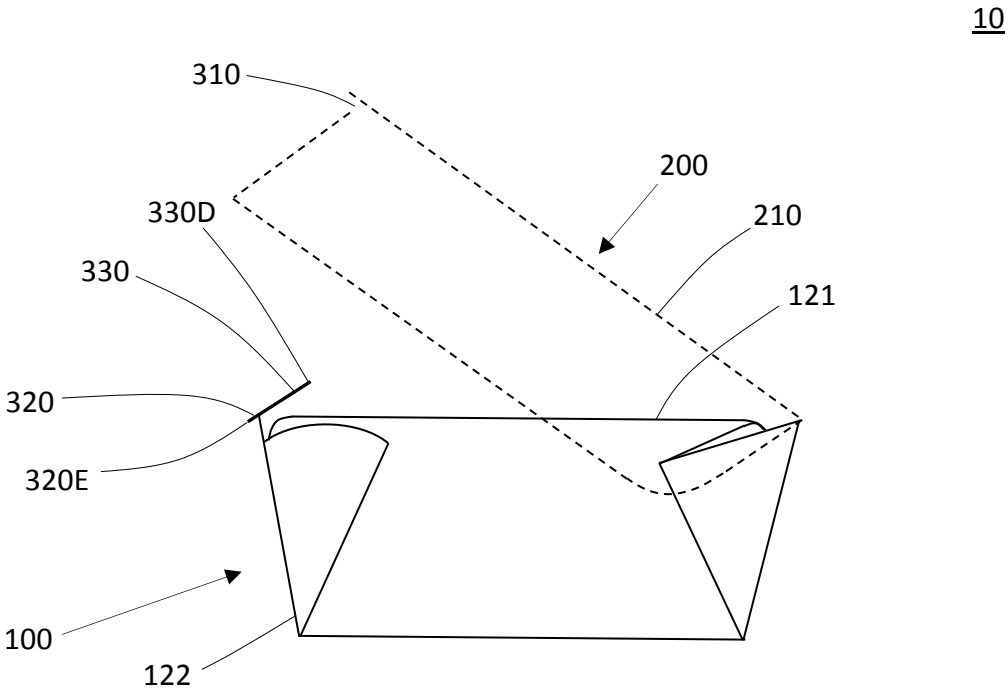
10
310
200
330D
210
330
121
320
320E
100
122

Fig. 5A

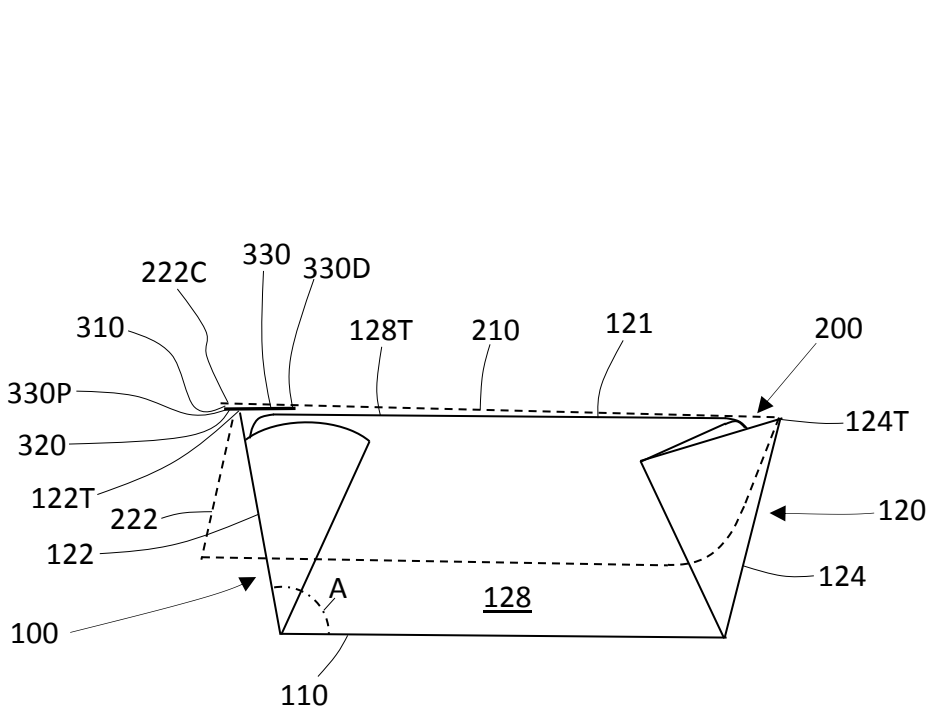
10
222C
330
330D
310
128T
210
121
200
330P
124T
320
122T
222
120
122
124
A
128
100
110

Fig. 5B

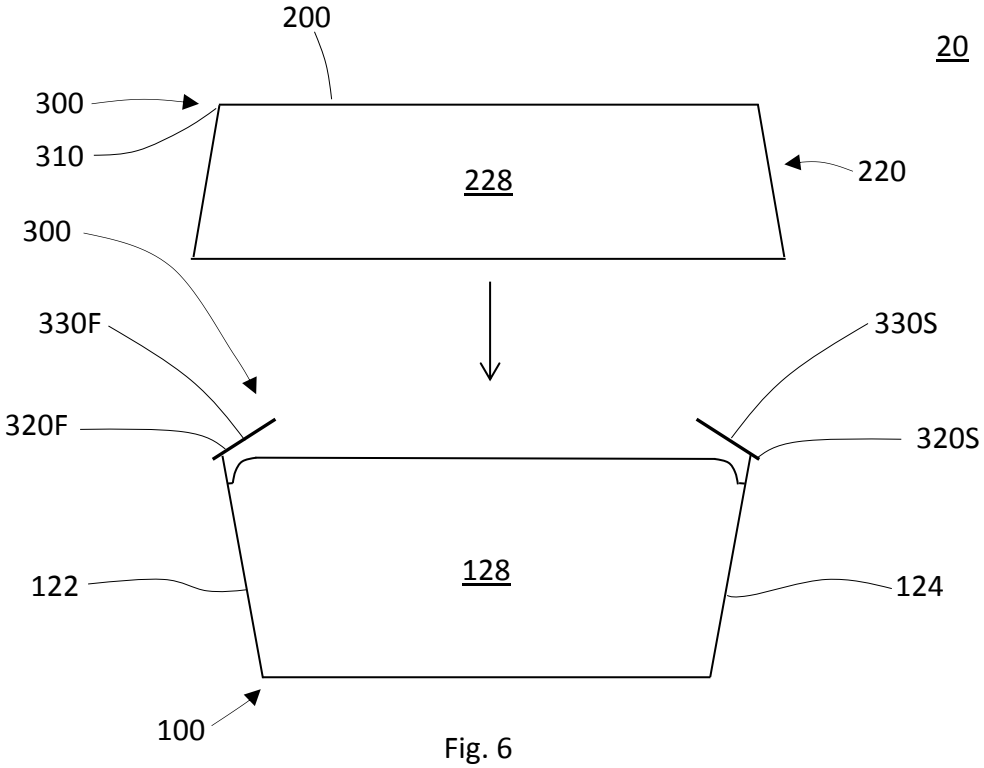

Fig. 6

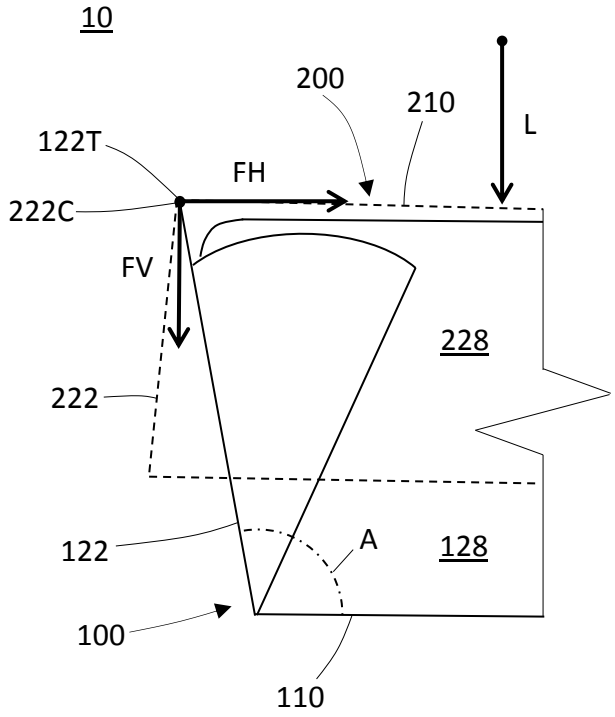

Fig. 7A

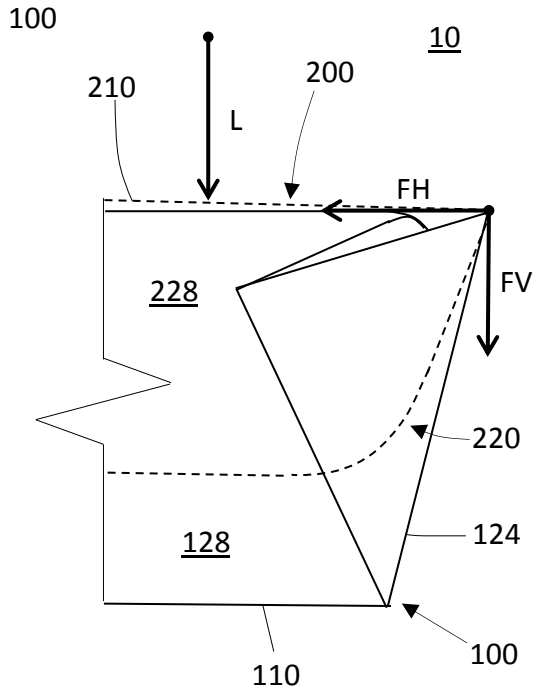

Fig. 7B

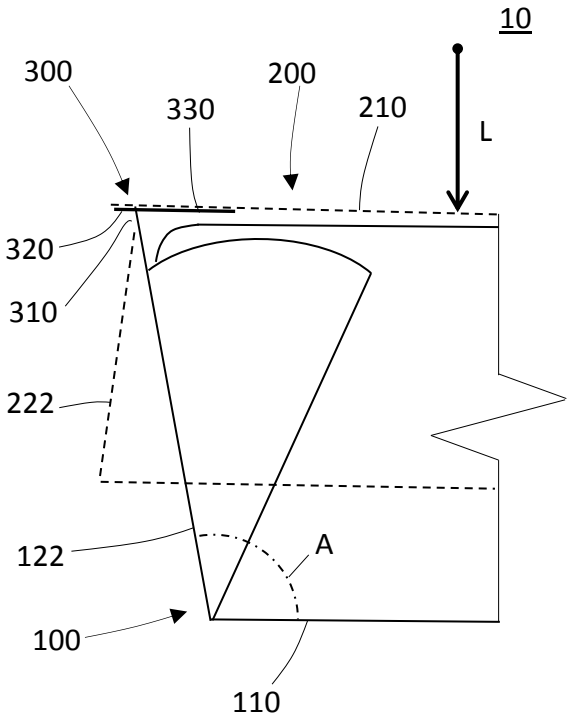
10
300
330
200
210
L
320
310
222
122
A
100
110

Fig. 8

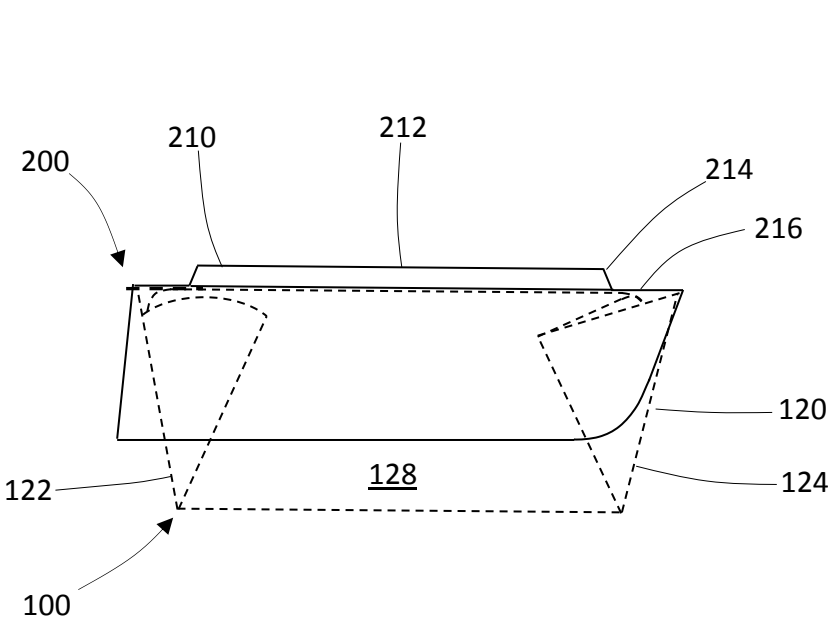
30
200
210
212
214
216
120
122
128
124
100

Fig. 9